REVISION

MODEL 750
SERIAL -0501 AND ON
ILLUSTRATED PARTS CATALOG

REVISION 4
1 JULY 2016

75PCC04

The entire catalog is provided with this revision. Please replace your current catalog in its entirety.

Cessna
A Textron Company

Illustrated Parts Catalog

MODEL 750
SERIAL -0501 AND ON

Member of GAMA

COPYRIGHT © 2014
CESSNA AIRCRAFT COMPANY
WICHITA, KANSAS, USA

1 MAY 2014

75PCC04

REVISION 4 1 JULY 2016

CHAPTER SECTION SUBJECT	NUMBER OF PAGES	DATE
00 - TITLE		
00 - LIST OF EFFECTIVE PAGES		
00 - RECORD OF REVISIONS		
LIST OF REVISIONS	1	Jul 1/2016
INTRODUCTION	9	Jan 1/2015
ICA SUPPLEMENT LIST	1	Jan 1/2015
SERVICE BULLETIN LIST	1	Jul 1/2016
SUPPLIER ADDRESS LIST	10	Jul 1/2016
ALPHABETICAL INDEX	30	Jul 1/2016
PART NUMBER INDEX	228	Jul 1/2016

© Cessna Aircraft Company

RECORD OF REVISIONS

Revsion Number	Date Inserted	Date Removed	Page Number	Revsion Number	Date Inserted	Date Removed	Page Number

LIST OF REVISIONS

1. Revisions

A. This Illustrated Parts Catalog includes the original issue and the revisions listed in Table 1. To ensure that information in this manual is current and the latest maintenance and inspections procedures are available, the revisions must be incorporated in the manual as they are issued.

Table 1. Basic Manual - Original Issue-1 May 2014

Revision Number	Date	Revision Number	Date
01	1 January 2015	02	1 April 2015
03	1 October 2015	04	1 July 2016

2. Export Compliance

A. This publication contains technical data and is subject to U.S. export regulations. This information has been exported from the United States in accordance with export administration regulations. Diversion contrary to U.S. law is prohibited.

ECCN: 9E991

© Cessna Aircraft Company

INTRODUCTION

1. Purpose

A. This Illustrated Parts Catalog (IPC) includes the illustration and identification of replacement parts and assemblies necessary for maintenance of the specified aircraft model. The Catalog gives the information available at the time of publication.

Refer to the Maintenance Manual, not to this Illustrated Parts Catalog, for removal and installation procedures. The airplane operator must use the applicable rules to establish the status or airworthiness of the airplane.

B. This IPC is prepared in accordance with the Air Transport Association 2200 Specification Format.

C. Chapter 11 contains procurable placards. Country designated placards are specified by foreign certification authorities and put into groups identified by an International Civil Aviation Organization (ICAO) identifier in the page footer.

D. Placards identified by the Code of Federal Regulations (CFRs) include: cockpit information, including instrument markings and any related limitations, aircraft operating limitations, power plant and auxiliary power unit instruments, flight control markings, fuel, oil, door and emergency exit information, limitations on storage compartments, loading, passenger cabin safety, and safety equipment operation.

E. The information in this publication is based on data available at the time of publication and is updated, supplemented, and automatically amended by service letters, service bulletins, publication revisions, reissues, ICA supplements, and temporary revisions which are issued through subscription services available from Customer Service. All such amendments become part of and are specifically incorporated within this publication. The latest changes to this publication are given through Customer Service subscription services and/or Citation Service Center and Citation Service Stations.

F. This Catalog does not include inspection, maintenance, and parts requirements for Supplemental Type Certificate (STC) installations. When an STC installation is incorporated on the airplane, an inspection is necessary in accordance with the inspection program published by the owner of the STC for the parts of the airplane for which the installation has an effect. Since STC installations can change 1) the system's interface, 2) operation qualities, and 3) component loads or stresses on adjacent structures, it is possible that Cessna's inspection specifications will not apply to airplanes with STC installations.

2. How to Get Customer Assistance

A. Customer Service

CESSNA CUSTOMER SERVICE	
Mailing Address	One Citation Lane Wichita, KS 67209

(1) If you need assistance with a general support question, publication information, or subscriptions, visit our website at **CessnaSupport.com** or contact:

CESSNA CUSTOMER SERVICE	
Phone Numbers	316-517-5800
	1-800-4Cessna option 2 (1-800-423-7762)
Fax	316-517-5802
Email Address	**Customercare@txtav.com**

© Cessna Aircraft Company

3. Effectivity

A. Numbers in the effectivity column show the serialization limits for the part. For example, the numbers 0001 in the "Effect From" column and the number 0023 in the "Effect To" column show that the part is used on airplanes 1 through 23. If the right column adjacent to the figure title is blank, the figure is applicable for all serials. If the right column adjacent to the indented installations, assemblies, or part numbers is blank, the part is applicable for all serials.

NOTE: Information in this Illustrated Parts Catalog is applicable to U.S. and Foreign Certified airplanes. Parts for foreign certified airplanes are identified by applicable serialization and by special note.

4. Electronic Media

A. Publications for this aircraft model are available in paper and as electronic media. The paper publications are available as individual publications such as the Maintenance Manual, Parts Catalog, etc. The electronic media service publications are available in a DVD, download, Online and mobile application library that contain multiple books together.

5. Part Number Index (Paper)

A. Part Numbers in the Numerical Index are shown in sequence, in accordance with (first) the extreme left digit, then (second) the next digit to the right. This sequence continues throughout the numbers, from left to right. The digits are shown in the sequence of: space, decimal, slash(/), symbol (such as #), numbers in numerical order, then alphabetical letters.

B. The Part Number Index is a complete listing of all parts included in the Detailed Parts Lists.

6. Nomenclature

A. The indentation system used in the detailed Parts List of this Catalog shows how the parts are related. For a given item, the indentation code shows a system, installation, or general heading that starts in the extreme left position and continues down into columns in sequence, until the end detail is completed. Refer to Figure 1.

B. The degree of indention of each item shows how the items are related. For example, the Battery Installation is in the first indenture of the nomenclature column. The Battery Assembly Manifold is the subsequent lower assembly and is shown in the second indenture of the nomenclature column. Refer to Paragraph A, General System of Assembly Order.

C. If two or more assemblies contain a majority of identical parts or if the assemblies are left and right counterparts, the assemblies are in sequence. The subsequent indented assemblies or detail parts apply to both higher-level assemblies, with the different parts coded to show that they are used on the specified, applicable assembly.

D. Attaching parts are shown immediately after the item to be attached and before any detail parts for the item. Attaching parts are shown with the same indention as the item they attach and include the caption “Attaching Parts”. The end of the attaching parts list is followed by the symbol" ---*---.

© Cessna Aircraft Company

A16285

1 2 3 4 5 6 7
Installation
. Detailed Parts for Installation
. Assembly
. Attaching Parts for Assembly
. . Detailed Parts for Assembly
. . Sub-Assembly
. . Attaching Parts for Sub-Assembly
. . . Detailed Parts for Sub-Assembly
. . . Sub-Sub-Assembly
. . . Attaching Parts for Sub-Sub-Assembly
. . . . Detailed Parts for Sub-Sub-Assembly

Order of Assembly
Figure 1

E. The indenture of a component part shows if it is a part of an assembly or if it is independent of the assembly. Components independent of an assembly have the same indenture as the assembly. Components of an assembly are identified by an additional indenture and follow any attaching parts for the assembly.

7. List of Effective Pages (Paper Versions)

A. A List of Effective Pages in the front of each chapter of the Illustrated Parts Catalog shows all pages within the chapter in sequence, with the current revision date for each page. A revised List of Effective Pages is included for each Illustrated Parts Catalog revision.

8. Revision Filing Instructions (Paper Version)

A. Regular Revision
(1) Refer to the List of Effective Pages of each chapter when you add a revision.
(2) Pages changed by the revision will be indicated by the revision date on the page and on the List of Effective Pages for that chapter. The revised page replaces the existing page in the catalog.
(3) Existing pages no longer needed in the catalog are indicated by “Deleted” on the List of Effective Pages. These pages are to be removed and discarded. When a page has been deleted by a revision, the List of Effective Pages for subsequent revisions do not list the page.

B. Temporary Revisions
(1) Put pages of a Temporary Revision in the applicable chapter in accordance with the filing instructions on the first page of the Temporary Revision.
(2) Temporary Revisions should be removed from the catalog only when replaced by a revision to the catalog or by instructions noted on the superseding Temporary Revision.

9. Revision Indicators

A. Additions, deletions, or revisions to the Parts List are identified by the letter “R” in the right margin of the page adjacent to the change or addition. When technical changes cause unchanged text to show on a different page, an “R” is shown in the margin opposite of the affected items.

10. Cessna Part Numbering System

A. The basic number identifies the Cessna drawing only. Each installation, assembly or detailed part is assigned a part number and includes a seven-digit drawing number and the applicable dash number. Refer to Figure 2.

© Cessna Aircraft Company

A16284

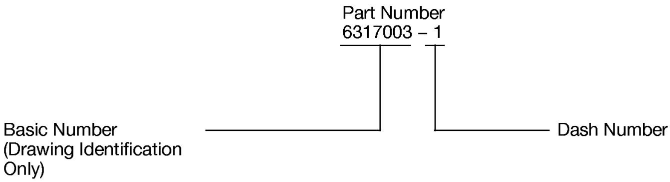

Part Number System
Figure 2

11. Standard Parts

A. Many parts having standard usage have been incorporated into the Cessna Standard System. Parts in this group are designated with the part number prefix "S", "CM", or "C".

B. Parts for standard hardware items such as screws, nuts, clamps, etc., are designated with the standard part number prefix "AN", "NAS", or "MS".

12. Page Numbering System

A. The Page Numbering System in the Illustrated Parts Catalog has three-element numbers with dashes between the numbers, with the figure number, page number and date printed to the side. Refer to Figure 3.

A16283

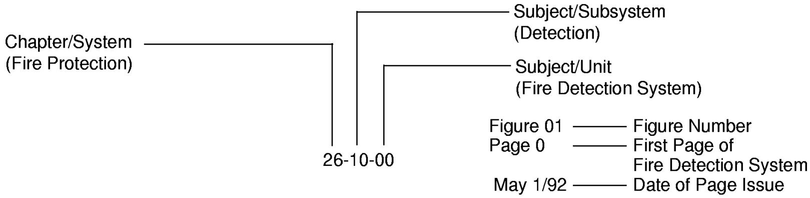

Page Numbering System
Figure 3

13. Part Number Column

A. This column contains the manufacturer's part number used to identify the item.

14. Units Per Assembly Column

A. The quantity listed in the Units Per Assembly column is the quantity used per item. The quantity shown for attaching parts is the quantity necessary to attach only one item. To find the total quantity necessary to attach more than one item, multiply the quantity of attaching parts by the number of items to be attached.

15. Symbols and Part Number Terms

A. When the term, “REFER TO”, is in the Nomenclature column and the Units Per Assembly column shows “RF”, the figure referred to will be the next highest assembly of the referred item.

© Cessna Aircraft Company

B. When the term, “DELETED-NOT USED”, appears in the Nomenclature column, it signifies that the index number was used but is no longer required. This procedure is used to eliminate re-indexing of all items following the deleted part.

C. When the letters BKI (Bulk Item) are in the Nomenclature column and the Units Per Assembly column indicates “AR” (As Required), refer to Cessna Service Parts Center for prices and units of measure.

16. Abbreviations Commonly Used

ALT	Alternate	IPC	Illustrated Parts Catalog
AR	As Required	NP	Non-Procurable
ASSY	Assembly	RF	Reference
BKI	Bulk Item	SB	Service Bulletin
FSO	For Spares Order	TR	Temporary Revision

17. Bulk Items

A. Items such as flexible air hose, rubber moldings and channels, and windshield sealing strips are shown in the Parts List as bulk items (BKI).

B. A bulk item is supplied in the bulk or cut length or quantity for an installation.

18. Serial and Color

A. When you make an order for upholstered material, carpet, or interior trim, make sure that you include the airplane model and serial number. This information makes sure that you receive the correct color combination.

19. Definition of Text Page Information

A. Refer to Figure 4.

(1) The Figure number is the illustration for the highest-level assembly specified in the applicable Parts List.
(2) The number in the indented Item column is the index number shown to call out that item or that part in the applicable illustration.
(3) When the item number for a part has a dash before the number, it is not specified on the illustration.
(4) A number in the Units Per Assembly (Units Per Assy) column is the quantity of the part used in the next-higher-level of the assembly or installation.
(5) A number in the Effectivity (Effect From To) column shows that the manufacturer uses the part only on specified airplanes, that is, for airplanes within a serial number range given in the Effectivity column.
(6) The AR in the Units Per Assembly (Units Per Assy) column is for those parts with the quantity “As Required.”
(7) When an alternative part number applies to a part, it is shown immediately after the part which it can replace. The entry ALT FOR in the Nomenclature column refers to the alternative part number.
(8) A USED ON or USED WITH note in the Nomenclature column includes the next higher assembly of a part when the part does not apply to all of the next higher assemblies that are given immediately before the part.
(9) Parts that are used only on a left or right installation or assembly include LH or RH in the Nomenclature column.
(10) When an installation or assembly has RF in the Units per Assembly (Units per Assy) column, that installation or assembly also is in the Parts List for the cross-reference figure specified in the Nomenclature column. The numerical Units-Per-Assy data is given only in the cross-reference figure.

© Cessna Aircraft Company

(11) When the Parts List page shows the letter R in the right margin, the R refers to the addition or revision of text for that line in the Parts List of the applicable IPC revision.

(12) A Supplier's part number is identified in the Part Number column and the federally supplied vendor code follows the nomenclature in the Nomenclature column.

© Cessna Aircraft Company

A16286

CESSNA AIRCRAFT COMPANY
MODEL XXX
ILLUSTRATED PARTS CATALOG

FIG ITEM	PART NUMBER	NOMENCLATURE 1 2 3 4 5 6 7		EFFECT FROM	EFFECT TO	UNITS PER ASSY
09A						
-		OVERHEAD CONSOLE INSTALLATION		0617	& ON	RF
- 1	4811329-1	. PANEL ASSY-OVERHEAD CONSOLE REFER TO NOTE 1		0617	0626	01
2	4811329-5	. PANEL ASSY-OVERHEAD CONSOLE FSO 4811329-6 REFER TO NOTE 1 . .		0627	0649	NP
3	4811329-6	. PANEL ASSY-OVRHD CONSOLE REFER TO NOTE 1.		0650	0681	01
4	4811550-1	. PANEL ASSY-OVRHD CONSOLE LH REFER TO NOTE 1		0682	0703	01
5	4811550-13	. PANEL ASSY-OVRHD CONSOLE LH REFER TO NOTE 1		0704	0723	01
6	4811805-1	. PANEL ASSY-OVRHD CONSOLE LH REFER TO NOTE 1		0724	& ON	01
- 7	4811805-3	. PANEL ASSY-OVRHD CONSOLE LH REFER TO NOTE 1 USED WITH REFRESHMENT CENTER		0724	& ON	01
8	4811550-2	. PANEL ASSY-OVRHD CONSOLE RH REFER TO NOTE 1 FSO 4811550-10 .		0682	0702	NP
9	4811550-10	. PANEL ASSY-OVRHD CONSOLE RH REFER TO NOTE 1		0703	0723	NP
10	4811805-2	. PANEL ASSY-OVRHD CONSOLE RH REFER TO NOTE 1		0724	& ON	01
		ATTACHING PARTS				
- 11	MS27039-0806	. SCREW		0617	0681	18
- 12	S1477-08	. NUT-CLIP		0617	0681	16
13	CL2C8	. CABLE	V99862	0617	0681	06
14	CL-2-F	. FERRULE	V99862	0617	0681	12
15	6519002-106	. HOOK		0617	0681	06
16	MS21086L08	. NUTPLATE		0617	0681	06
- 17	F990048	. FABRIC FASTENER-PILE BKI		0682	0723	02
- 18	F990118	. HOOK BKI		0682	0723	02
		—*—				
19	6519311-4	. . RETAINER ASSY-NO SMOKING/FASTEN SEAT BELT SIGN		0617	0681	02
20	6519187-50	. . BRACKET ASSY		0617	0649	02
21	6519187-52	. . BRACKET ASSY		0650	0681	02
22	CM3657-3	. . SCREW		0617	0681	08
23	4811557-15	. . PLATE ASSEMBLY-LH		0682	0723	02
24	4811557-18	. . PLATE ASSEMBLY-RH		0682	0723	02
25	4811557-13	. . PLATE ASSEMBLY		0682	0723	08
26	4811557-16	. . PLATE		0682	0723	01
- 27	NAS1149FN816P	. . WASHER		0682	0723	28 R
- 28	NAS1149FN816P	. . WASHER USED WITH REFERESHMENT CENTER.		0724	& ON	24
- 29	MS21042-08	. . NUT		0682	0723	28
- 30	MS21042-08	. . NUT USED WITH REFERESHMENT CENTER		0724	& ON	24
31	6519187-29	. . FASTENER-FABRIC		0617	0681	02
32	4811164-27	. . GRILL ASSY-SPEAKER		0617	0621	04
33	4811164-37	. . GRILL ASSY-SPEAKER		0622	0630	04
34	4811331-15	. . GRILL ASSY-SPEAKER		0631	& ON	04
- 35	F990034	. . FABRIC FASTENER-HOOK BKI				AR
36	4811329-7	. . GRILL-AIR REGISTER		0650	0681	01
- 37	4811329-3	. . COVER-SPEAKER GRILL		0617	0681	04
38		. . LIGHT ASSY REFER TO 33-20-00 FIGURE 01				RF R
39	4811164-23	. . LENS-FWD		0617	0626	02
40	4811164-39	. . LENS-FWD		0627	0681	02
- 41	4811331-7	. . LENS-AFT		0617	0626	02
- 42	4811331-12	. . LENS-AFT		0627	0681	02
43	215-120106-03	. . FASTENER	V02768			10
44	80-001516	. . FASTENER ALT FOR 215-120106-03	V02768			10
45		. . OXYGEN BOX AND LINES REFER TO 35-20-00 FIGURE 02				RF R
46	5515126-61	. . BRACKET ASSY		0617	0681	05
- 47	MS21069L08	. . . NUTPLATE		0617	0681	06
48	6519002-187	. . BRACKET ASSY		0617	0681	01
- 49	MS21069L06K	. . . NUTPLATE		0617	0681	03
50	6219286-1	. . DOUBLER ASSY		0617	0681	01
51	MS21075L3E	. . . NUTPLATE		0617	0681	04
52	6519219-1	. . CHIME BEZEL ASSY.		0617	0646	01
53	6519219-3	. . CHIME BEZEL ASSY.		0647	0681	01
- 54	4811557-1	. . CHIME GRILL		0682	& ON	01
55	F990034	. . FABRIC FASTENER-HOOK BKI		0617	0681	AR
56		. . CHIME ASSY REFER TO 23-30-01 FIGURE 02				RF R
57		. SIGN ASSY-NO SMOKING AND FASTEN SEAT BELT REFER TO 33-20-00 FIGURE 01.				RF R

NOTE 1—WHEN ORDERING THIS PART, ALSO PROVIDE AIRPLANE MODEL AND SERIAL NUMBER. R

- ITEM NOT ILLUSTRATED

© Cessna Aircraft Company

Figure 09A
Page 1
25-20-01 Aug 1/2007

Sample Page
Figure 4

© Cessna Aircraft Company

20. How to Use the Catalog if the Part Number is Known (Paper Version)

A. Refer to Figure 5

(1) Find the part number in the Part Number Index.

(2) Refer to the chapter, section, subject, figure, and item number.

(3) Go to the chapter, section, subject, and figure.

(4) Find the part on the illustration and in the part number column by item number.

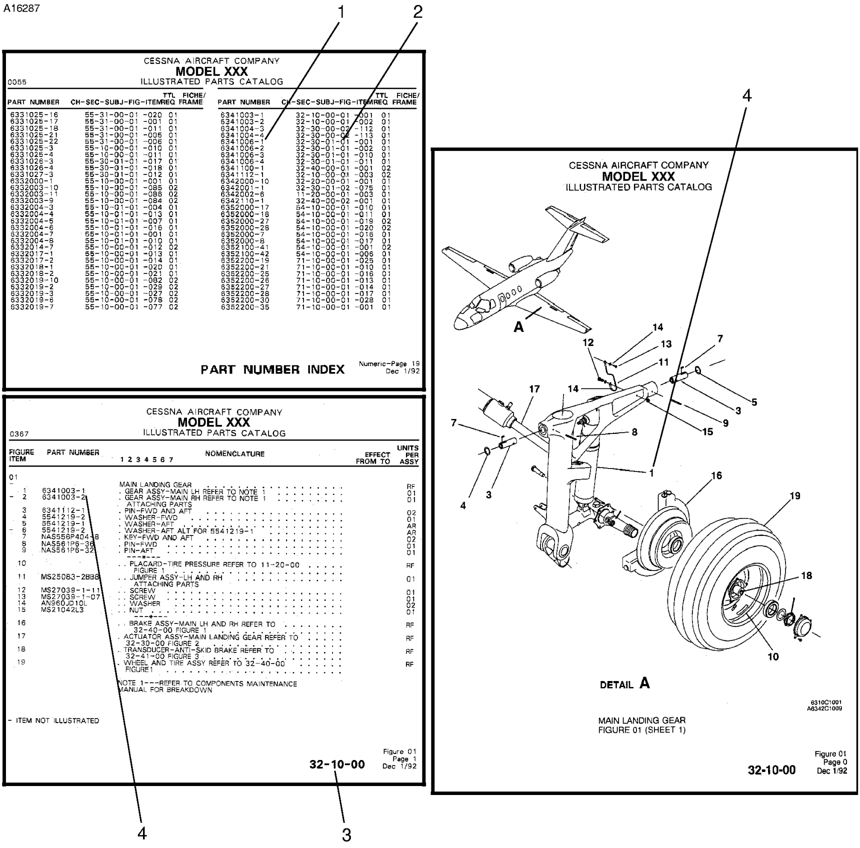

CESSNA AIRCRAFT COMPANY
MODEL XXX
ILLUSTRATED PARTS CATALOG

0055

PART NUMBER	CH-SEC-SUBJ-FIG-ITEM	TTL REQ	FICHE/ FRAME
6331025-16	55-31-00-01 -020	01	
6331025-17	55-31-00-01 -001	01	
6331025-18	55-31-00-01 -011	01	
6331025-21	55-31-00-01 -005	01	
6331025-22	55-31-00-01 -006	01	
6331025-3	55-10-00-01 -010	01	
6331025-4	55-10-00-01 -011	01	
6331026-3	55-30-01-01 -017	01	
6331026-4	55-30-01-01 -018	01	
6331027-3	55-30-01-01 -012	01	
6332000-1	55-10-00-01 -001	01	
6332003-10	55-10-00-01 -085	02	
6332003-11	55-10-00-01 -086	02	
6332003-9	55-10-00-01 -084	02	
6332004-3	55-10-01-01 -004	01	
6332004-4	55-10-01-01 -013	01	
6332004-5	55-10-01-01 -007	01	
6332004-6	55-10-01-01 -016	01	
6332004-7	55-10-01-01 -001	01	
6332004-8	55-10-01-01 -010	01	
6332014-7	55-10-00-01 -012	02	
6332017-1	55-10-00-01 -013	01	
6332017-2	55-10-00-01 -014	01	
6332018-1	55-10-00-01 -020	01	
6332018-2	55-10-00-01 -021	01	
6332019-10	55-10-00-01 -082	02	
6332019-2	55-10-00-01 -029	02	
6332019-3	55-10-00-01 -027	02	
6332019-6	55-10-00-01 -078	02	
6332019-7	55-10-00-01 -077	02	
6341003-1	32-10-00-01 -001	01	
6341003-2	32-10-00-01 -002	01	
6341004-3	32-30-00-02 -112	01	
6341004-4	32-30-00-02 -113	01	
6341006-1	32-30-01-01 -001	01	
6341006-2	32-30-01-01 -002	01	
6341006-3	32-30-01-01 -010	01	
6341006-4	32-30-01-01 -011	01	
6341100-1	32-40-00-01 -001	02	
6341112-1	32-10-00-01 -003	02	
6342000-10	32-20-00-01 -001	01	
6342001-1	32-30-01-02 -075	01	
6342002-6	11-20-00-01 -003	01	
6342110-1	32-40-00-02 -001	01	
6352000-17	54-10-00-01 -010	01	
6352000-18	54-10-00-01 -011	01	
6352000-27	54-10-00-01 -019	02	
6352000-28	54-10-00-01 -020	02	
6352000-7	54-10-00-01 -016	01	
6352000-8	54-10-00-01 -017	01	
6352100-41	54-10-00-01 -001	02	
6352100-42	54-10-00-01 -006	01	
6352200-19	71-10-00-01 -025	01	
6352200-21	71-10-00-01 -010	01	
6352200-25	71-10-00-01 -016	01	
6352200-26	71-10-00-01 -013	01	
6352200-27	71-10-00-01 -014	01	
6352200-28	71-10-00-01 -017	01	
6352200-30	71-10-00-01 -028	01	
6352200-35	71-10-00-01 -001	01	

PART NUMBER INDEX Numeric-Page 19 Dec 1/92

CESSNA AIRCRAFT COMPANY
MODEL XXX
ILLUSTRATED PARTS CATALOG

0367

FIGURE ITEM	PART NUMBER	NOMENCLATURE 1 2 3 4 5 6 7	EFFECT FROM TO	UNITS PER ASSY
01				
-		MAIN LANDING GEAR		RF
1	6341003-1	. GEAR ASSY-MAIN LH REFER TO NOTE 1		01
- 2	6341003-2	. GEAR ASSY-MAIN RH REFER TO NOTE 1		01
		. ATTACHING PARTS		
3	6341112-1	. PIN-FWD AND AFT		02
4	5541219-2	. WASHER-FWD		01
5	5541219-1	. WASHER-AFT		AR
- 6	5541219-2	. WASHER-AFT ALT FOR 5541219-1		AR
7	NAS558P404-8	. KEY-FWD AND AFT		02
8	NAS561P6-36	. PIN-FWD		01
9	NAS561P6-32	. PIN-AFT		01
		---*---		
10		. . PLACARD-TIRE PRESSURE REFER TO 11-20-00 FIGURE 1		RF
11	MS25083-2BB8	. . JUMPER ASSY-LH AND RH		01
		ATTACHING PARTS		
12	MS27039-1-11	. . SCREW		01
13	MS27039-1-07	. . SCREW		01
14	AN960JD10L	. . WASHER		02
15	MS21042L3	. . NUT		01
		---*---		
16		. . BRAKE ASSY-MAIN LH AND RH REFER TO 32-40-00 FIGURE 1		RF
17		. ACTUATOR ASSY-MAIN LANDING GEAR REFER TO 32-30-00 FIGURE 2		RF
18		. TRANSDUCER-ANTI-SKID BRAKE REFER TO 32-41-00 FIGURE 3		RF
19		. WHEEL AND TIRE ASSY REFER TO 32-40-00 FIGURE1		RF

NOTE 1---REFER TO COMPONENTS MAINTENANCE MANUAL FOR BREAKDOWN

- ITEM NOT ILLUSTRATED

32-10-00 Figure 01 Page 1 Dec 1/92

Known Part Number Example
Figure 5

© Cessna Aircraft Company

21. How To Use Catalog If Part Number Is Unknown (Paper Version)

A. Refer to Figure 6.
   (1) Refer to the Alphabetical Index.
   (2) Refer to the main group in which the part is listed.
   (3) Go to the chapter, section, subject and figure number in which the part should be shown.
   (4) Go to the illustration and find the part.
   (5) Refer to the corresponding item number in the part number column.

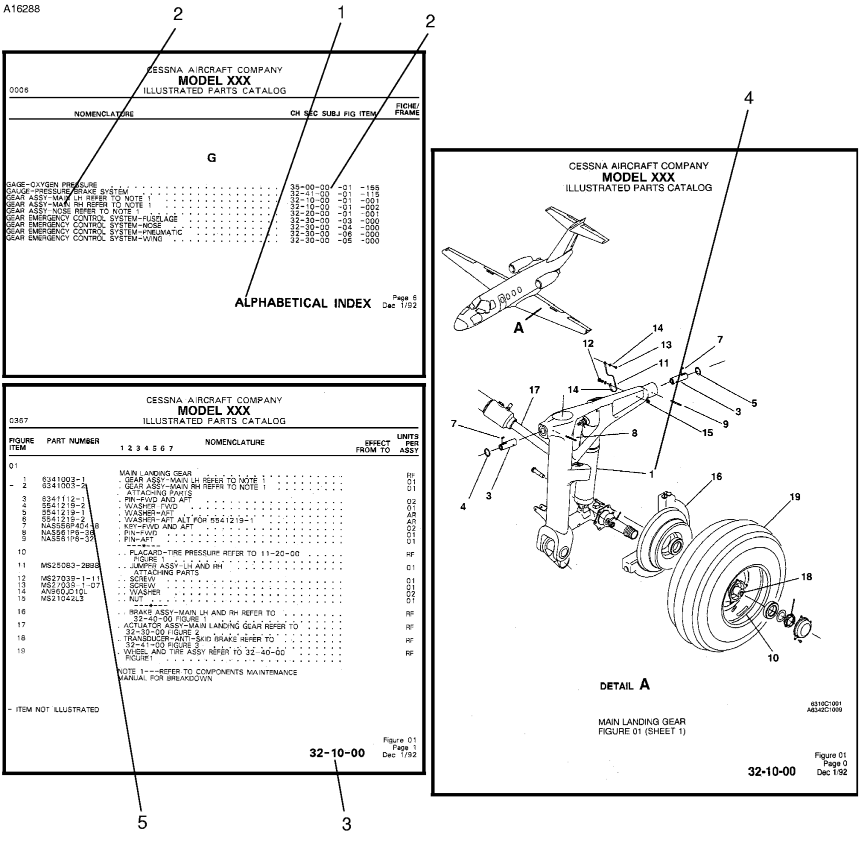

Unknown Part Number Example
Figure 6

© Cessna Aircraft Company

ICA SUPPLEMENT LIST

ICA Supplement Number	Revision	Title	ICA Supplement Date	Manual Incorporation Date
ICA-750-23-00001	B	AIRCELL DATA INTERFACE UNIT (DIU)	Apr 17/2009	Jan 1/2015
ICA-750-23-00002	A	AIRCELL BROADBAND SYSTEM	Feb 19/2010	Jan 1/2015
ICA-750-23-00003	A	IMMARSAT SWIFT BROADBAND	Mar 30/2012	Jan 1/2015
ICA-750-23-00004	A	AIRCELL AXXESS WIRELESS	Jun 03/2009	Jan 1/2015
ICA-750-23-00005	-	XM WEATHER	Sep 28/2009	Jan 1/2015
ICA-750-28-00001	-	FOREIGN FUEL APPROVAL	Feb 28/2013	Jan 1/2015
ICA-750-31-00001	D	DU-875 DISPLAY SYSTEM UPGRADE	Aug 12/2011	Jan 1/2015
ICA-750-32-00001	C	NLG TORQUE LINK	Dec 14/2012	Jan 1/2015
ICA-750-32-00002	B	LG BLOW-DOWN BOTTLE GAUGE INSTALLATION	Dec 07/2009	Jan 1/2015

© Cessna Aircraft Company

SERVICE BULLETIN LIST

1. General

A. The Service Bulletin List provides the service bulletin number, title and date. If a service bulletin has been revised, the revision number is listed. If a service bulletin has been included in this manual, the manual revision date is given.

Service Bulletin	Revision	Service Bulletin Title	Service Bulletin Date	Included In Manual
SB750-27-67		Flap And Spoiler/Speed Brake Interference Inspection/Modification	Mar 27/2015	No Effect
SB750-11-20		Placards & Markings - Maximum Airspeed Placard Update	Oct 9/2015	July 1/2016
SB750-31-07		Indicating/Recording Systems - ARES II Software Update	Sep 28/2015	No Effect

© Cessna Aircraft Company

SUPPLIER ADDRESS LIST

00624 EATON AEROQUIP, INC.
ENGINEERED SYSTEMS DIV.
300 S. East Ave.
Jackson, MI 49203-1972

01226 VLIER ENGINEERING
DIV. OF BARRY WRIGHT
2333 Valley St.
Burbank, CA 91505

02101 PACIFIC SCIENTIFIC CO.
ELECTRO KINETICS DIV.
6382 Rose Lane
Carpinteria, CA 93013

02697 PARKER-HANNIFIN CORP.
O-RING DIV. - SEAL GROUP
2360 Palumbo Dr.
P.O. Box 11751
Lexington, KY 40509

02732 LANE SPRING CO.
1910 Santa Anita Ave.
P.O. Box 3511
South El Monte, CA 91733

02750 CONSOLIDATED CONTROLS CORP.
SUB. OF EATON CORP.
15 Durant Ave.
Bethel, CT 06801-1901

02988 FREUDENBERK-NOK
65 Spruce St.
Tillonsburg Ontario, Canada N4G4H3

03296 NYLON MOLDING CORP.
2755 Thompson Creek Rd.
Pomona, CA 91767

05167 PACIFIC SCIENTIFIC CO.
ADVANCED TECHNOLOGY GROUP
HTL DIV.
1800 Highland Ave.
Duarte, CA 91010

05209 TED MFG. CORP.
11415 Johnson Dr.
Shawnee Mission, KS 66203-2641

05399 BEMCO, INC.
157 Main St.
P.O. Box 68
Centerton, AR 72719

06034 NEWAGE INDUSTRIES, INC.
125 James Way
Southampton, PA 18966-3817

06141 L-3 COMMUNICATIONS CORP.
6000 Fruitville Rd.
Sarasota, FL 34232

06177 PNEUDRAULICS, INC.
8575 Helms Ave.
Rancho Cucamonga, CA 91730

06324 GLENAIR, INC.
1211 Air Way
Glendale, CA 91201-2405

06581 ALLAN AIRCRAFT SUPPLY CO.
11643 Vanowen
North Hollywood, CA 91609

06915 RICHCO PLASTIC CO.
5825 N. Tripp Ave.
Chicago, IL 60646

07688 JOINT ELECTRON DEVICE
ENGINEERING COUNCIL
2500 Wilson Blvd., Suite 220
Arlington, VA 22201-3834

07890 SIEMON CO.
76 Westbury Park Rd.
Watertown, CT 06795-2606

08524 DUETSCH FASTENER CORP.
1315 East Grand Ave.
El Segundo, CA 90245

© Cessna Aircraft Company

08748	ELDEC CORP. 16700 13th Ave. West P.O. Box 100 Lynnwood, WA 98036
09359	MINCO PRODUCTS INC. 7300 Commerce Lane Minneapolis, MN 55432
09445	DUKES, INC. 9060 Winnetka Ave. Northridge, CA 91324-3293
0A4W2	ZITES, INC. 1415 E. Waterman St. Wichita, KS 67211
0ABH9	H K FITTINGS, INC. 150 W. Cypress Ave. Burbank, CA 91502
0CWP9	SYNTEX RUBBER CORP. 938 Crescent Ave. P.O. Box 4006 Bridgeport, CT 06607
0GZF3	HEADS UP TECHNOLOGIES INC. 2033 Chennault Suite 100 Carrollton, TX 75006-5097
0K311	PRECISE FLIGHT, INC. 63120 Powell Butte Rd. Bend, OR 97701-7906
0S553	P.M. RESEARCH 4110 Niles Hill Road Wellsville, NY 14895
0TMJ9	SECURAPLANE 3830 E. 44TH St. Suite 534 Tucson, AZ 85713
0TRC3	GARMIN INTERNATIONAL, INC. 1200 East 151st St. Olathe, KS 66062-3426
0U8J3	THRANE & THRANE, INC. 509 Viking Dr., Suite KLM Virginia Beach, VA 23452-7323
0ZQ52	MOUSER ELECTRONICS, INC. 10000 N. Main St. Mansfield, TX 76063
10402	WHELEN ENGINEERING CO., INC. Rt. 145 Winthrop Road Chester, CT 06412
10639	AVIONICS SPECIALTIES, INC. 3367 Earlysville Rd. Earlysville, VA 22936
10989	PALL AEROPOWER CORP. SUBDIVISION OF PALL CORP. 6301 49th St. N Finellas Park, FL 34655-5798
11139	THE DEUTSCH CO. ENGINEERED CONNECTING DEVICES 36033 Whittier Ave. Hemet, CA 92545
11362	PARKER HANNIFIN CORP. STRATOFLEX DIV. SYMETRICS OPN. 3353 Old Conejo Rd. Newbury Park, CA. 91320-2162
11960	KIRKHILL TA CO. HASKON AEROSPACE DIV. 336 Weir St. Tauntohn, MA 02780-4234
12697	CLAROSTAT SENSORS AND CONTROLS 12055 Rojas Dr. Suite K El Paso, TX 79936
13201	HELICAL PRODUCTS CO., INC. 901 W. McCoy Lane P.O.BOX 1069 Santa Maria, CA 93456
13499	ROCKWELL INTERNATIONAL CORP. 400 Collins Rd., NE. Cedar Rapids, IA 52498

© Cessna Aircraft Company

13636 BARRY CONTROLS AEROSPACE
DIV. OF APPLIED POWER INC.
4510 Vanowen St.
Burbank, CA 91505-7710

13691 SENSOR SYSTEMS, INC.
8929 Fullbright Ave.
Chatsworth, CA 91311-6124

14242 VOSS INDUSTRIES, INC.
2168 W. 25th St.
Cleveland, OH 44113

14314 PRECISION SENSORS, INC.
50 Seemans Lane
Milford, CT 06460-4337

14798 DUETSCH CO. METAL
COMPONENTS DIV.
14800 S. Figueroa St.
Gardena, CA 90248

14949 TROMPETER ELECTRONICS INC.
31186 La Baya Dr.
P.O. Box 5069
Westlake Village, CA

15284 EATON CORP.
BELTSVILLE PLANT - FLUID
CONVEYANCE DIV.
11642 Old Baltimore Pike
Beltsville, MD 20705-1294

15605 EATON CORP. OP & TECH CTR
4201 N. 27th St.
Milwaukee, WI 53216

15860 NEW HAMPSHIRE BALL BEARING,
INC. ASTRO DIV.
155 Lexington Ave.
Laconia, NH 03426

16017 KGS ELECTRONICS, INC.
418A E. Live Oak Ave.
Arcadia, CA 91006-5690

19710 MPC PRODUCTS CORP.
7426 N Linder Ave.
Skokie, IL 60077-3219

1M2T3 INNOVATIVE POWER SOLUTIONS
LLC
373 South St.
Eatontown, NJ 07724

1N1A7 R & B ELECTRONICS, INC.
1520 Industrial Park Dr.
Sault Ste. Marie, MI 49783

1NQ67 AIRCELL
1172 Century Dr.
Building B, Suite 280
Louisville, CO 80027

1P8A5 NATIONAL RUBBER CORP.
2969 Industrial Blvd.
Bethel Park, PA 15102-2535

1QDV5 3M CORP.
6801 River Pl. Blvd.
Austin, TX 78726

1TLL9 RAPID PROCESSING SOLUTIONS,
INC.
DBA RAPIDSI
1367 South Anna St.
Wichita, KS 67209

20748 PONCA PRODUCTS, INC.
2204 S. Mead
Wichita, KS 67211-5020

21335 TIMKEN U.S. CORP.
FAFNIR BEARINGS DIV.
336 Mechanic St.
Lebanon, NH 03766-0267

22863 KAVILCO CORP.
14501 Los Angeles Ave.
Moorpark, CA 93021

23936 WILLIAM J. PURDY CO.
INTERFAN DIV.
770 Airport Blvd.
Burlingame, CA 94010

24984 HYDRAFLOW
13259 E. 166th St.
Cerritos, CA 90703-2269

25583 L-3 COMMUNICATIONS AVIONICS
SYSTEMS, INC.
5353 52nd St. S.E.
Grand Rapids, MI 49512-9704

© Cessna Aircraft Company

25693 MEGGITT SAFETY SYSTEMS, INC.
1915 Voyager Ave.
Simi Valley, CA 93063-3349

26044 SAF INDUSTRIES, LLC
DBA GAR-KENYON TECHNOLOGIES
238 Water St.
Naugatuck, CT 06770-0559

26433 PARKER-HANNIFIN CORP.
AIRBORNE DIV.
711 Taylor St.
P.O. Box 4032
Elyria, OH 44036

29822 EXTRUSION TECHNOLOGY INC.
800 Trim Way
Randolph, MA 02368

2X920 LEE AIR, INC.
4603 S. Seneca St.
Wichita, KS 67217-4524

2Y828 BF GOODRICH FLIGHT SYSTEMS
7020 Hantley Rd.
Columbus, OH 43229-1022

30242 AVTECH CORP.
3400 Wallingford Ave. N.
Seattle, WA 98103

30817 LAIRD TECHNOLOGIES
1 Shielding Way
Deleware Water Gap, PA 18327-0000

30974 AEROFIT PRODUCTS INC.
8531 Whitaker St.
Buena Park, CA 90621-3129

31272 ANCRA INTERNATIONAL CORP.
4880 W. Rosecrans Ave.
Hawthorne, CA 90250

32707 AIR CARGO EQUIPMENT CORP.
DBA TELAIR
2930 E. Maria St.
Compton, CA 90221-5817

33463 NOVATRONICS INC.
677 Erie St.
P.O. Box 610
Stratford, Ont N5A 6V6 Canada

34163 AEROSPACE SYSTEMS AND COMPONENTS, INC.
1620 S. Broadmoor
Wichita, KS 67218

34345 KULITE SEMICONDUCTOR PRODUCTS DIV.
1 Willow Tree Lane
Leonia, NJ 07605

3CYG3 SANYO DENKI AMERICA, INC.
468 Amapola Ave.
Torrance, CA 90501-1474

3GS68 WINGLET TECHNOLOGY, LLC.
10012 West York
Oatville, KS 67215

46384 PENN ENGINEERING AND CORP.
5190 Old Easton Highway
Danboro, PA 18916

4V792 ROCKWELL INTERNATIONAL CORP.
COLLINS GENERAL AVIATION DIV.
400 Collins Road, NE
Cedar Rapids, IA 52498

4W953 PRECISION PATTERN, INC.
1643 S. Maize Rd.
Wichita, KS 67209

50105 XAR INDUSTRIES, INC.
151 Puente Ave.
La Puente, CA 91746-2302

50632 KAMATICS CORP. SUB OF KAMAN CORP.
1335 Blue Hills Ave.
Bloomfield, CT 06002

51663 LEAR ROMEC CORP.
241 S. Abbe Rd.
P.O. Box 4014
Elyria, OH 44035

52713 PACIFIC PRECISION PRODUCTS MFG.
15261 Barranca Pkwy.
Irvine, CA 92618-2201

© Cessna Aircraft Company

53655	AVOX SYSTEMS, INC. FORMERLY SCOTT TECHNOLOGIES 225 Erie St. Lancaster, NY 14086-9502
54071	APPH WICHITA, INC. 1445 South Sierra Dr. Wichita, KS 67209-2933
55635	DAYTON-GRANGER, INC. 3299 SW. 9th Ave. P.O. Box 350550 Fort Lauderdale, FL 33335
55787	STABILUS 1201 Tullip Dr. Gastonia, NC 28052
55939	HONEYWELL, INC. GROUP BUSINESS/COMMUTER AVIATION SYSTEM DIV. 5353 W. Bell Rd. Glendale, AZ 85308-9000
56337	MEDECO SECURITY LOCKS, INC. US. Rt. 11 W At Allegheny Dr. P.O. Box 3075 Salem, VA 24153
56501	THOMAS & BETTS CORP. 8155 T & B Blvd. Memphis, TN 38125
56644	AURORA BEARING CO. 970 S. Lake St. Aurora, IL 60506-5929
56732	DEE HOWARD COMPANY 9610 John Saunders Rd. P.O. BOX 17300 San Antonio, TX 78217
56987	CAPTIVE FASTENER CORPORATION 115 BAUER DR. OAKLAND, NJ 07436-3103
57606	PSI BEARING 2175 Union Place Simi Valley, CA 93065
57790	EGC ENTERPRISES, INC. 7315 Industrial Pkwy. Mentor, OH 44060
58376	DEVORE AVIATION CORP. 6104-B Kircher Blvd. N.E. Albuquerque, NM 87109
58755	LEGRIS, INC. 244 Paul Rd. P.O. Box 24710 Rochester, NY 14624-4927
58982	AMPHENOL PCD, INC. Centennial Park 2 Technology Dr. Peabody, MA 01960-7907
59603	TRONAIR INC. S 1740 Eber Rd. Holland, OH 43528-9635
59885	ROSEMOUNT AEROSPACE CO. 14300 Judicial Rd. Burnsville, MN 55306-4898
60038	TIMKIN CO., THE 1835 Dueber Ave. SW. Canton, OH 44706
60253	ARTEX AIRCRAFT SUPPLIES, INC. 10714 Township Rd. P.O. Box 1270 Canby, OR 97013
60363	PARKER HANNIFIN CORP. TECHSEAL DIV. 3025 West Croft Cir. Spartanburg, SC 29302-4801
60678	ROSEMOUNT AEROSPACE INC. 1256 Trapp Rd. St. Paul, MN 55121
60980	MEGGITT SILICONE PRODUCTS, INC. 2010 Lafayette Ave. P.O. Box 887 McMinnville, OR 97128-0887

© Cessna Aircraft Company

61349 AMETEK INC.
U.S. GAUGE DIV.
900 Clymer Ave.
Sellersville, PA 18960

61526 TURCK-MULTIPROX, INC.
3000 Campus Dr.
Minneapolis, MN 55441-5019

62292 EBM INDUSTRIES, INC.
110 Hyde Rd.
Farmington, CT 06034-4009

62661 COLDER PRODUCTS CO.
1001 Westgate Dr.
St. Paul, MN 55114

62983 EATON AEROSPACE LLC
COMMAND SYSTEMS DIV.
5353 Highland Dr.
Jackson, MS 39206-3449

63005 ALLISON GAS TURBINE DIV.
GENERAL MOTORS CORP.
2001 S. Tibbs
Indianapolis, IN 46206-0420

63563 CHELTON INC.
698 Metro Park Cir.
P.O. Box 976
Lewisville, TX 75067-4824

63HW9 C & K COMPONENTS INC.
15 Riverdale Ave.
Newton , MA 02458

64547 HONEYWELL INTERNATIONAL, INC.
ENGINES AND SYSTEMS
PMGS/AIRESEARCH
11100 N. Oracle Rd.
P.O. Box 38001
Tucson, AZ 85737-8001

65507 HONEYWELL INC.
COMMERCIAL AVIATION SYSTEMS
SENSOR PRODUCTS OPN.
8840 Evergreen Blvd.
Minneapolis, MN 55433-6040

66197 ELECTRONIC CABLE SPECIALISTS
AND ELECTRICAL CONSERVATION
SYSTEMS INC.
11227 W. Forest Home Ave.
Franklin, WI 53132-1202

66530 CLICK BOND
DIV. OF PHYSICAL SYSTEMS, INC.
2151 Lockheed Way
Carson City, NV 89701-0713

70628 VESPER CORP. ARROWHEAD
PRODUCTS DIV.
4411 Katella Ave.
Los Alamitos, CA 90720

71286 ALCOA GLOBAL FASTENERS, INC.
CAMLOC PRODUCTS DIV.
DBA ALCOA FASTENING SYSTEMS
3014 West Lomita Blvd.
Torrance, CA 90505

71400 COOPER BUSSMAN, INC.
114 Old State Rd.
P.O. Box 14460
St. Louis, MO 63021-5942

72794 DZUS FASTENER CO., INC.
425 Union Blvd.
West Islip, NY 11795-3116

72914 GRIMES AEROSPACE CO.
DBA HONEYWELL
550 St. Rt. 55
Urbana, OH 43078-1948

73030 UNITED TECH CORP. HAMILTON
STD DIV.
1 Hamilton Rd.
Windsor Locks, CT 06096

73168 KIDDE TECHNOLOGIES, INC.
FENWALL SAFETY SYSTEMS DIV.
700 Nickerson Rd.
Marlborough, MA 01752

73197 HI-SHEAR CORP.
2600 Skypark Dr.
Torrance, CA 90509

73760 ITT FLUID TECHNOLOGY CORP.
AEROSPACE CONTROLS DIV.
28150 Industry Dr.
Valencia, CA 91355

© Cessna Aircraft Company

73949 GUARDIAN ELECTRIC CORP. CO.
1425 Lake Ave.
Woodstock, IL 60098

75345 KIRKHILL RUBBER CO.
300 E. Cypress St.
Brea, CA 92821

76005 LORD CORP.
AEROSPACE PRODUCTS DIV.
1635 W. 12th St.
P.O. Box 10039
Erie, PA 16514

76374 EATON AEROSPACE, LLC
POWER & LOAD MANAGEMENT SYSTEMS
2250 Whitefield Ave.
Sarasota, FL 34243-3962

78710 TRIUMPH CONTROLS, INC.
205 Church Rd.
P.O. Box 2100
North Wales, PA 19454

79326 TRANSDIGM INC.
ADEL/WIGGINS GROUP
5000 Triggs St.
P.O. Box 22228
Los Angeles, CA 90022

80201 CR INDUSTRIES CHICAGO RAWHIDE
MFG. CO.
12001 Lackland Rd.
St. Louis, MO 63141

80204 AMERICAN NATIONAL STANDARDS INSTITUTE
11 W. 42nd St.
New York, NY 10036

80523 BABCOCK INDUSTRIES, INC. ACCO CONTROLS GROUP
5200 Industrial Drive
Milan, TN 38358

81376 SOUTHWEST PRODUCTS CO.
2240 Buena Vista St.
Irwindale, CA 91010-3318

81579 MASON ELECTRIC CO., INC.
SUBDIVISION OF CLAROSTAT MFG. CO., INC.
440 W. Los Feliz Rd.
Glendale, CA 91204

81590 KORRY ELECTRONICS, INC.
901 Dexter Ave. North
Seattle, WA 98109-3536

81640 EATON CORP.
AEROSPACE AND COMMERCIAL CONTROL DIV
2250 Whitfield Ave. E
Sarasota, FL 34243-9703

81833 AEROCONTROLEX GROUP
TRANSDIGM, INC.
26380 Curtiss Wright Pkwy. - Dest Bldg.
P.O. Box 43210
Richmond Heights, OH 44143

81860 BARRY WRIGHT CORP. DBA BARRY CONTROLS
40 Guest St.
Brighton, MA 02135-9105

82254 CURTIS DYNA-PRODUCTS CORP.
17335 U.S. Hwy 31 North
P.O. Box 297
Westfield, IN 46074

82389 SWITCHCRAFT, INC.
SUBDIVISION OF RAYTHEON
5555 N. Elstron Ave.
Chicago, IL 60630-1314

82647 SENSATA TECHNOLOGIES INC.
529 Pleasant St.
Attleboro, MA 02703-2421

82829 ALLEN AIRCRAFT PRODUCTS INC.
6168 Woodbine St.
P.O. Box 1211
Ravenna, OH 44266-1211

© Cessna Aircraft Company

82877	ROTRON, INC. DBA AMETEK ROTRON TECHNICAL MOTOR DIV. 9 Hasbrouch Lane Woodstock, NY 12498	85932	ELECTROFILM, INC. 27727 Ave. Scott P.O. Box 55249 Valencia, CA 91355
83014	HARTWELL CORP. 900 S. Richfield Rd. Placentia, CA 92870	86090	J.C. CARTER CO., INC. 671 W. 17th St. Costa Mesa, CA 92626
83086	NEW HAMPSHIRE BALL BEARINGS INC. HI-TECH DIV. 175 Jaffery Rd. Peterborough, NH 03458-1709	88759	A & A MFG CO. INC. 2300 S. Calhoun Rd. New Berlin, WI 53151
83259	PARKER-HANNIFIN CORP. COMPOSITE SEALING SYSTEMS DIV. 7664 Panasonic Way San Diego, CA 92154-8206	90526	CLIPPARD INSTRUMENT LABORATORY INC. 7390 Colerain Rd. Cincinnati, OH 45239
83326	SAFE FLIGHT INSTRUMENT CORP. New King St. P.O. Box 550 White Plains, NY 10602	91506	AUGAT INC. 452 John Dietsch Blvd. P.O. Box 2510 North Attleboro, MA 02763-0000
83533	ESSEX INDUSTRIES, INC. ESSEX MFG. DIV. 6 Sunnen Dr. St. Louis, MO 63143-3903	91511	AUTO VALVE, INC. 1707 Guenther Rd. Dayton, OH 45427
83930	TRANSDIGM, INC. DBA ADEL WIGGINS GROUP 5000 Triggs St. Los Angeles, CA 90022-4833	91812	JANCO CORP. 3111 Winona Ave. P.O. Box 3038 Burbank, CA 91504
84256	AVIBANK MFG., INC. 210 S. Victory Blvd. P.O. Box 391 Burbank, CA 91502	91816	CIRCLE SEAL CONTROLS, INC. 2301 Wardlow Cir. Corona, CA 92880
84834	LEGRIS CO. New York, NY 14624	91836	KINGS ELECTRONICS CO., INC. 1685 Overview Dr. Rockhill, SC 29730
84971	TA MFG., INC. SUBDIVISION OF ESTERLINE 28065 W. Franklin Pkwy. Santa Clarita, CA 91380-9031	91929	HONEYWELL, INC. SENSING & CO.NTROL DIV. 11 W. Spring St. Freeport, IL 61032

© Cessna Aircraft Company

92092	BF GOODRICH CO. 440 Middlefield St. Middletown, CT 06457-3570
92555	THE LEE CO. 2 Pettipaug Rd. P.O. Box 424 Westbrook, CT 06498
92867	ORSCHELN CO., INC. 1177 N. Morley St. P.O. Box 280 Moberly, MO 65270
94222	SOUTHCO, INC. 210 N. Brinton Lake Rd. P.O. Box 0116 Concordville, PA 19331-0116
94581	NATIONAL UTILITIES CORP. DIV. OF NUCO INDUSTRIES INC. 135 E. Railroad Ave. Monrovia, CA 91016-4562
94697	MOOG, INC. Seneca St. at Jamison Rd. East Aurora, NY 14052
95272	AMERICAN UNITED SEAL INC. STILLMAN SEAL DIV. 6020 Avenida Encinas P. O. Box 2000 Carlsbad, CA 92008
96487	VALCOR ENGINEERING CORP. 2 Lawrence Rd. Springfield, NJ 07081
97153	BF GOODRICH CO. AEROSPACE DIV. AIRCRAFT WHEEL & BRAKE OPERATIONS 101 Waco St. P.O. Box 340 Troy, OH 45373-3835
97415	SMITHS AEROSPACE ACTUATION SYSTEMS- YAKIMA 2720 W Washington Ave. P.O. Box 9907 Yakima, WA 98909
98087	ITT CORP. ITT AEROSPACE CONTROLS ITT NEO-DYNE 28150 Industry Dr. Valencia, CA 91355-4101
98441	PARKER-HANNIFIN CORP. FLUID CONNECTORS DIV. 220 Roberts Cutoff P.O. Box 10398 Fort Worth, TX 76114-0398
98524	MONOGRAM AEROSPACE FASTENERS A NORTEC CO. 3423 S. Garfield Ave. P.O. Box 6847 Los Angeles, CA 90040-3103
99193	HONEYWELL INTERNATIONAL, INC. ENGINES AND SYSTEMS 111 S. 34th St. Phoenix, AZ 85072-2181
99240	CRISSAIR, INC. 38905 10th St. East Palmdale, CA 93550
99321	SHAW AERO DEVICES, INC. 3580 Shaw Blvd. Naples, FL 34117
99643	EATON AEROSPACE, LLC DBA STERER ENGINEERING DIV. VICKERS FLUID CONTROL AND ACTUATION DIV. 4690 Colorado Blvd. Los Angeles, CA 90039
99862	CARR LANE MFG. CO. 4200 Carr Lane Ct. St. Louis, MO 63119
A0076	MICROTECNICA SPA Via Madama Cristina 147 10126 Torino, Italy

© Cessna Aircraft Company

D4856	LITEF GMBH Loerracher Strasse 18 Postfach 774 7800 Freiburg IM Breisgau, GERMANY
F0553	INTERTECHNIQUE SA Zi Des Gatines 61 R Pierre Currie P.O. Box BP 1 Plaisir F-78370 France
F5341	EROS/EQUIPMENTS RESPIRATO- RIES A OXYGENE DE SECOURS/GIE 61 Pierre Curie Plaisir, France 78371
HLPG	HL-PLANARTECHNIK GMBH Hauert 13 44227 Dortmund, Germany
K2962	BAXTER WOODHOUSE AND TAYLOR LTD. A Woodside Poyton 2 Stockport Ches SK12 1AH, England
KANS	KANSAS FIRE EQUIPMENT 123 S. Osage Wichita, KS 67203
LVTL	LEE VALLEY TOOLS, LTD. P.O. Box 1780 Ogdensburg, NY 13669-6780
S3013	LEMO SA ELECTROTECHNIQUE Route De Lausanne Morges, Switzerland
XEHT	XCELITE ELECTRONIC HAND TOOLS THE COOPER GROUP P. O. Box 728 Apex, NC 27502

© Cessna Aircraft Company

A

NOMENCLATURE	CH SEC SUBJ FIG	ITEM
AC CIRCUIT BREAKER	24-50-05-01	-
AC MONITOR ASSY-LH UK907	24-20-25-01	-001
AC MONITOR ASSY-RH UK908	24-20-25-01	-002
AC OVERVOLTAGE MONITOR	24-20-25-01	-
ACCELEROMETER-ARINC 717 TRI AXIAL UF303	31-30-00-01	-005
ACCESS DOOR ASSY	52-40-01-01	-001
ACCESS DOOR ASSY-LH	53-30-02-03	-080
ACCESS DOOR ASSY-LH	53-30-03-05	-001
ACCESS DOOR ASSY-RH	53-30-03-05	-002
ACCESS PLATES - CENTER WING	57-10-01-01	-
ACCUMULATOR-HYDRAULIC	29-23-05-01	-075
ACOUSTIC DOOR SEAL	52-11-20-01	-
ACOUSTIC PANEL INSTALLATION	25-80-03-01	-
ACTUATOR-FLAP #1-LH	27-50-00-01	-075
ACTUATOR-FLAP #1-RH	27-50-00-01	-076
ACTUATOR-FLAP #2 LH	27-50-00-01	-150
ACTUATOR-FLAP #2 RH	27-50-00-01	-151
ACTUATOR-FLAP #3 -LH	27-50-00-01	-225
ACTUATOR-FLAP #3 -RH	27-50-00-01	-226
ACTUATOR-FLAP #4 LH	27-50-00-01	-300
ACTUATOR-FLAP #4 LH	27-50-00-01	-301
ACTUATOR-FLAP #5 LH	27-50-00-01	-375
ACTUATOR-FLAP #5 RH	27-50-00-01	-376
ACTUATOR-FLAP #6 LH	27-50-00-01	-450
ACTUATOR-FLAP #6 RH	27-50-00-01	-451
ACTUATOR-MAIN LANDING GEAR	32-30-30-01	-002
ACTUATOR ASSY-LINEAR SERVO UPR ZV005	27-21-00-01	-012
ACTUATOR ASSY-LINEAR SERVO LWR ZV006	27-21-00-01	-013
ACTUATOR ASSY-LINEAR SERVO ZV004	27-26-00-01	-001
ACTUATOR ASSY UV003	27-40-00-01	-001
ACTUATOR ASSY-LH AND RH SLAT	27-80-10-01	-006
ACTUATOR-NOSE GEAR EXT/RET	32-30-20-01	-001
ACTUATOR-NOSE GEAR UPLOCK FSO 6747005-1	32-31-05-01	-001
ACTUATOR-NOSE GEAR UPLOCK	32-31-05-01	-001A
ADAPTER	27-40-00-01	-151
ADF ANTENNA YF608	34-53-00-01	-005
AFT CABIN FLOORBOARD SUPPORT - LH	53-21-00-01	-
AFT CABIN FRAME - FS 311/312	53-22-00-06	-
AFT CABIN FRAME - FS 329.9 TO FS 359.76.	53-22-00-07	-
AFT CABIN FRAME - FS 372.61 TO FS 389.61	53-22-00-08	-
AFT CABIN FRAME - FS 398.00	53-22-00-09	-
AFT CABIN FRAME - FS 401/402	53-22-00-10	-
AFT CABIN FRAME - FS 414.00	53-22-00-18	-
AFT CABIN FRAME - FS 430.19	53-22-00-19	-
AFT CABIN FRAME - FS 442.80	53-22-00-20	-
AFT CABIN SKIN AND STRINGERS	53-24-00-01	-
AFT ENGINE BEAM FRAME	53-60-01-10	-
AFT ENGINE ISOLATOR-LH & RH	71-20-00-01	-010
AFT FUEL MANIFOLD	28-20-00-03	-086
AFT LOGIC MODULE	24-60-25-01	-
AFT OVERBOARD DRAIN	38-32-10-01	-
AFT PRESSURE BULKLHEAD STRUCTURE	53-60-05-03	-
AFT PRESSURIZATION CONTROL SYSTEM	21-33-00-01	-
AFT SPAR - VERTICAL FIN	55-30-00-08	-
AILERON ASSEMBLY	57-60-00-02	-
AILERON CONTROL CABLES - FUSELAGE	27-10-15-01	-
AILERON INSTALLATION	57-60-00-01	-
AILERON POSITION SENSOR INSTALLATION	57-60-00-03	-
AILERON POWER - TRIM AND FEEL ASSEMBLY	27-10-50-01	-
AILERON POWER - TRIM AND FEEL SUPPORTS	27-10-50-02	-

© Cessna Aircraft Company

A Continued

NOMENCLATURE	CH SEC SUBJ FIG	ITEM
AILERON PUSHROD ASSY	27-10-30-01	-532
AILERON SECTOR-UPPER	27-10-15-01	-086
AILERON/SPOILER ROLL DISCONNECT SYSTEM	27-11-00-01	-
AIR DATA COMPUTER UF001	34-10-00-01	-027
AIR FILTER PRESSURIZATION	21-33-00-01	-016
AIR FILTER ASSY	21-35-00-01	-009
AIR INLET - HIGH PRESSURE BLEED AIR	36-10-20-03	-
AIR INLET DUCT-AUXILIARY POWER UNIT	49-10-15-01	-002
AIR TURBINE STARTER-LH AND RH	80-10-00-01	-075
AIR VALVE-CHARGING	32-51-05-01	-027
AIRCELL AXXESS IRIDIUM ANTENNA	23-15-45-01	-
AIRCELL CONFIGURATION MODULE UK506	23-15-00-01	-008
AIRCRAFT LEVELING DEVICE	31-20-00-01	-
AIRCRAFT RECORDING SYSTEM (ARES)	31-35-00-01	-
ALTERNATING CURRENT (AC) GENERATION	24-20-00-01	-
ANEROID ASSY-PRESSURIZATION VALVE SK004	21-35-00-01	-089
ANGLE-OF-ATTACK (AOA) SYSTEM	34-25-00-01	-
ANTENNA-AIRCELL AIR-TO-GROUND AFT	23-15-00-01	-075
ANTENNA-AIRCELL AIR-TO-GROUND FWD YY502	23-15-00-01	-079
ANTENNA-IRIDIUM/GPS PASSIVE #1 YF506	23-15-05-01	-018
ANTENNA-IRIDIUM/GPS PASSIVE #2 YC512	23-15-05-01	-019
ANTENNA-ELT YF501	25-60-00-01	-021
ANTENNA YN600	34-31-00-01	-005
ANTENNA-GPS/XM 1 AFT YC700	34-51-10-01	-001
ANTENNA-GPS/XM 2 FWD YF700	34-51-10-01	-002
ANTENNA-L-BAND FWD YY804	34-55-10-01	-001
ANTENNA-L-BAND AFT YY805	34-55-10-01	-002
ANTENNA ADAPTER-TNC/BNC YELLOW JF801 J1	34-47-00-01	-014
ANTENNA ADAPTER-TNC/BNC BLACK JF802 J2	34-47-00-01	-015
ANTENNA ADAPTER-TNC/BNC RED JF804 J4	34-47-00-01	-016
ANTENNA ADAPTER-TNC/BNC BLUE JF803 J3	34-47-00-01	-017
ANTENNA MOUNT ASSY	34-31-00-01	-001
ANTI-ICE BLEED AIR - HORIZONTAL STABILIZER LEADING EDGE	30-13-10-01	-
ANTI-ICE BLEED AIR - WING LEADING EDGE SLAT	30-10-30-01	-
ANTI-ICE BLEED AIR SUPPLY - AFT	30-10-00-01	-
ANTI-ICE BLEED AIR SUPPLY - FORWARD	30-10-00-02	-
ANTI-ICE INBOARD WING LEADING EDGE	30-10-20-01	-
ANTICOLLISION AND POSITION LIGHT	33-40-15-01	-
ANTISKID CONTROL BOX	32-47-10-01	-
ANTISKID CONTROL VALVE	32-47-05-01	-
ANTISKID WHEEL TRANSDUCER	32-47-15-01	-
AOA APPROACH INDEXER UC002	34-25-00-01	-012
AOA SWITCH BOX ASSY UF022	34-25-00-01	-018
AOA WATER SEAL GASKET	34-25-00-01	-003
APRON ASSY-LH UPPER BONDED	71-10-00-01	-075
APRON ASSY-RH UPPER BONDED	71-10-00-01	-076
APRON ASSY-LH LOWER BONDED	71-10-00-01	-078
APRON ASSY-RH LOWER BONDED	71-10-00-01	-079
APU ATTACH FITTING	53-60-02-04	-
ARBOR HALF ASSY	52-10-35-01	-024
ATG 4000 BROADBAND LRU UK502	23-15-00-01	-004
ATTACH FITTING - FS 583.06 - FS 614.65	53-60-02-02	-
ATTACH FITTING - FS 614.65 - FS 644.35	53-60-02-03	-
AUDIO INTEGRATING SYSTEM	23-50-20-01	-
AUTO-THROTTLE FSO 9914785-5	76-10-00-01	-001
AUTOMATIC DIRECTION FINDER (ADF-4000) UK601	34-53-00-01	-001
AUTOPILOT SERVO - AILERON ROLL	22-10-10-01	-
AUTOPILOT SERVO - ELEVATOR PITCH	22-10-10-02	-
AUTOTHROTTLE LIGHT EMITTING DIODE (LED) PANEL	33-10-15-01	-
AUXILIARY POWER ENGINE CONTROL UNIT	49-40-05-01	-

© Cessna Aircraft Company

NOMENCLATURE	CH SEC SUBJ FIG	ITEM
A Continued		
AUXILIARY POWER UNIT	49-10-00-01	-001
AUXILIARY POWER UNIT (APU) DC GENERATION	24-35-00-01	-
AUXILIARY POWER UNIT (APU) FIRE DETECTION SYSTEM.	26-11-00-01	-
AUXILIARY POWER UNIT (APU) FIRE EXTINGUISHING SYSTEM.	26-23-00-01	-
AUXILIARY POWER UNIT AIR INLET	49-10-15-01	-
AUXILIARY POWER UNIT BLEED AIR DISTRIBUTION.	36-13-00-01	-
AUXILIARY POWER UNIT DRAIN LINES	49-10-20-01	-
AUXILIARY POWER UNIT EXHAUST	49-80-00-01	-
AUXILIARY POWER UNIT FUEL SYSTEM	49-30-00-01	-
AUXILIARY POWER UNIT IGNITION/STARTING	49-40-00-01	-
AUXILIARY POWER UNIT POWERPLANT	49-10-00-01	-
AUXILIARY POWER UNIT SUPPORT STRUCTURE	53-30-02-04	-
AUXILIARY PUMP-HYDRAULIC MY001	29-20-05-01	-001
AUXILIARY SPAR ASSY - LH	57-10-03-06	-001
AUXILIARY SPAR ASSY - RH	57-10-03-06	-002
AUXILIARY SPAR INSTALLATION	57-10-03-06	-
AVIONICS JUNCTION BOX - COCKPIT	24-60-40-01	-
AVIONICS TEST CABLE	25-25-00-01	-015
B		
BAG ASSY	25-25-00-01	-002
BAGAGAGE DOOR FRAME	53-60-05-02	-
BAGGAGE COMPARTMENT	25-50-00-01	-
BAGGAGE COMPARTMENT BLANKET	25-80-01-04	-
BAGGAGE COMPARTMENT LADDER	25-50-15-01	-
BAGGAGE COMPARTMENT LIGHT ASSEMBLY	33-30-20-01	-
BAGGAGE COMPARTMENT PRESSURIZATION CONTROL SYSTEM.	21-35-00-01	-
BAGGAGE COMPARTMENT SMOKE DETECTION SYSTEM	26-13-00-01	-
BAGGAGE COMPARTMENT WARM AIR DISTRIBUTION.	21-26-00-01	-
BAGGAGE DOOR.	52-30-00-01	-
BAGGAGE DOOR HANDLE AND LINKAGE	52-30-20-01	-
BAGGAGE DOOR OPENING STRUCTURE INSTALLATION	53-60-05-01	-
BAGGAGE DOOR PRESSURE SEAL	52-30-35-01	-
BALANCE WEIGHT-ELEVATOR INBD	55-20-00-01	-085
BALANCE WEIGHT-ELEVATOR CTR.	55-20-00-01	-089
BALANCE WEIGHT-ELEVATOR OUTBD	55-20-00-01	-093
BALANCE WEIGHT-ELEVATOR OUTBD	55-20-00-01	-093A
BALANCE WEIGHT-LH INBD	57-60-00-02	-014
BALANCE WEIGHT-RH INBD	57-60-00-02	-015
BALANCE WEIGHT-LH INBD CTR	57-60-00-02	-016
BALANCE WEIGHT-RH INBD CTR.	57-60-00-02	-017
BALANCE WEIGHT-LH OUTBD CTR.	57-60-00-02	-018
BALANCE WEIGHT-RH OUTBD CTR	57-60-00-02	-019
BALANCE WEIGHT-LH OUTBD CTR.	57-60-00-02	-020
BALANCE WEIGHT-RH OUTBD CTR	57-60-00-02	-021
BALANCE WEIGHT-LH OUTBD CTR.	57-60-00-02	-022
BALANCE WEIGHT-RH OUTBD CTR	57-60-00-02	-023
BALANCE WEIGHT-LH OUTBD	57-60-00-02	-024
BALANCE WEIGHT-RH OUTBD	57-60-00-02	-025
BALANCE WEIGHT-LH OUTBD	57-60-00-02	-026
BALANCE WEIGHT-RH OUTBD	57-60-00-02	-027
BALL VALVE-FUEL FIREWALL SHUTOFF	28-20-30-01	-004
BALL VALVE-FUEL TRANSFER SHUTOFF	28-20-30-01	-020
BALL VALVE-FUEL FIREWALL SHUTOFF	28-20-30-01	-078
BALL VALVE - FUEL SHUTOFF	28-20-30-01	-
BASE ASSY	23-60-00-01	-001
BATTERY-44A HR MARATHON LH UY903	24-30-35-01	-001

© Cessna Aircraft Company

B Continued

NOMENCLATURE	CH SEC SUBJ FIG	ITEM
BATTERY-44A HR MARATHON RH UY904	24-30-35-01	-002
BATTERY ACCESS DOOR	52-40-29-01	-
BATTERY INSTALLATION	24-30-30-01	-
BELLCRANK ASSY-AILERON DISCONNECT	27-11-00-01	-026
BELLCRANK ASSY-TAILCONE BAGGAGE	52-30-20-01	-092
BELLOWS ASSY-ANTI-ICE NACELLE	30-20-00-02	-009
BLADE ASSY	34-50-05-01	-002
BLEED AIR DISTRIBUTION - HIGH PRESSURE	36-10-20-02	-
BLEED AIR DISTRIBUTION - LOW PRESSURE	36-10-20-04	-
BLEED AIR SUPPLY - ENVIRONMENTAL CONTROL UNIT	21-21-00-01	-
BLEED VALVE ASSY PRESSURIZATION	21-33-00-01	-012
BLOCK-LH AND RH	24-30-00-01	-026
BOLTING SYSTEM	52-10-22-01	-
BOLTING SYSTEM LINKAGE	52-10-22-02	-
BOOST PUMP ASSY-LH ELECTRIC FUEL ML001	28-20-05-01	-001
BOOST PUMP ASSY-RH ELECTRIC FUEL MR002	28-20-05-01	-002
BOOT FITTING-LH	57-51-00-01	-014
BOOT FITTING-RH	57-51-00-01	-015
BOTTLE ASSY	32-33-05-01	-001
BOTTLE ASSY-APU FIRE EXTINGUISHER	26-23-00-01	-001
BOTTLE ASSY-EMERGENCY BRAKE	32-49-00-01	-001
BRACKET ASSY	35-10-20-01	-002
BRAKE ARM ASSY-PILOT RH	27-25-00-01	-169
BRAKE ASSY	32-43-00-02	-270
BRAKE ASSY-WHITE	32-43-00-02	-270A
BRAKE METERING VALVE	32-43-10-01	-001
BRAKE METERING VALVE	32-43-10-01	-
BULB-LH FUEL TEMPERATURE INDICATING TL001	28-40-20-01	-001
BULB-RH FUEL TEMPERATURE INDICATING TR002	28-40-20-01	-002
BULLET FAIRING	55-30-10-01	-
BUMPER-FWD AND AFT	52-40-37-01	-169
BUNGEE ASSY	27-20-00-01	-075
BUNGEE ASSY-SLAT ACTUATING	27-80-10-01	-036
BUNGEE ASSY-ELEVATOR	27-33-00-01	-100
BUNGEE ASSY-RUDDER	27-20-00-01	-106
BUNGEE-CONTROL COLUMN BALANCE-FSO 6760353-21	27-33-25-01	-001
BUZZER UT512	25-60-00-01	-028

C

NOMENCLATURE	CH SEC SUBJ FIG	ITEM
C406-N TRANSMITTER-MAIN ASSY	25-60-00-01	-001
CABIN ALTITUDE MODULE ASSEMBLY	35-20-15-01	-
CABIN ALTITUDE MODULE ASSY-LH UC115	35-20-15-01	-004
CABIN ALTITUDE MODULE ASSY-RH UF116	35-20-15-01	-005
CABIN DOOR ASSY	52-10-00-01	-001
CABIN DOOR OPENING STRUCTURE	53-12-15-01	-
CABIN DOOR SEAL VALVE	52-11-25-01	-
CABIN DOOR SPRING FSO 6711320-201	52-10-35-01	-028
CABIN LOUDSPEAKER UC2001	23-50-25-01	-009
CABIN LOUDSPEAKER UF2001	23-50-25-01	-010
CABIN LOUDSPEAKER UC2002	23-50-25-01	-011
CABIN LOUDSPEAKER UF2002	23-50-25-01	-012
CABIN OVERHEAD DUCT	21-23-20-01	-
CABIN SEAT BEAM - LH INBOARD	53-30-06-01	-
CABIN SEAT BEAM - RH INBOARD	53-30-06-02	-
CABIN SPLICE INSTALLATION	53-40-00-02	-
CABIN SURROUND SPEAKER UC2004	23-50-25-01	-001
CABIN SURROUND SPEAKER UF2004	23-50-25-01	-002

© Cessna Aircraft Company

C Continued

NOMENCLATURE	CH SEC SUBJ FIG	ITEM
CABIN SURROUND SPEAKER UC2005	23-50-25-01	-003
CABIN SURROUND SPEAKER UF2005	23-50-25-01	-004
CABIN SURROUND SPEAKER UC2006	23-50-25-01	-005
CABIN SURROUND SPEAKER UF2006	23-50-25-01	-006
CABIN WINDOW ASSY	56-20-00-01	-001
CABLE	32-51-35-01	-002
CABLE ASSY-LH FWD SPOILER SECTOR TO TURNBUCKLE COPILOT	27-13-00-01	-084
CABLE ASSY-RH FWD SPOILER SECTOR TO TURNBUCKLE COPILOT	27-13-00-01	-085
CABLE ASSY LH AFT-TURNBUCKLE TO ROLL MIXER COPILOT	27-13-00-01	-227
CABLE ASSY RH AFT-TURNBUCKLE TO ROLL MIXER COPILOT	27-13-00-01	-228
CABLE ASSY-LH COPILOT	32-43-00-01	-009
CABLE ASSY-LH PILOT	32-43-00-01	-007
CABLE ASSY-OUTBD EXTENSION	27-13-05-01	-086
CABLE ASSY-OUTBD RETRACTION	27-13-05-01	-085
CABLE ASSY-PARKING BRAKE	32-45-00-01	-001
CABLE ASSY-RH COPILOT	32-43-00-01	-010
CABLE ASSY-RH PILOT	32-43-00-01	-008
CABLE-COPILOT DISCONNECT	27-13-00-01	-001
CAM LOCK	52-30-20-01	-039
CAM LOCK-TAILCONE ACCESS DOOR	52-40-01-01	-019
CAM LOCK	52-40-07-01	-002
CAM LOCK	52-40-37-01	-177
CANADIAN INTERIOR PLACARDS AND MARKINGS- FLIGHT COMPARTMENT	11-C-31-01	-
CAP ASSY-FUEL FILLER	28-10-05-01	-001
CAP ASSY-FUEL FILLER COMMON KEYED	28-10-05-01	-002
CAP ASSY	29-10-80-01	-078
CAP ASSY	29-10-80-01	-085
CAPTURED WEIGHT-LWR-LWR RUDDER BALANCE	55-40-00-01	-093
CAPTURED WEIGHT-UPR-UPR RUDDER BALANCE	55-40-00-01	-096
CARRY THRU AFT BEAM INSTALLATION - FS 378.306	57-10-02-03	-
CARTRIDGE	26-20-15-01	-005
CARTRIDGE	26-23-00-01	-004
CARTRIDGE ALT FOR 13083-5	26-23-00-01	-005
CARTRIDGE ASSY-ELECTRIC FUEL BOOST PUMP	28-20-10-01	-001
CENTER BOW INSTALLATION	53-20-02-03	-
CENTER SPAR - VERTICAL FIN	55-30-00-07	-
CHAIN ASSY	33-30-10-01	-005
CHECK VALVE-MOTIVE FLOW FUEL	28-20-00-02	-016
CHECK VALVE-PRIMARY EJECTOR FUEL PUMP LH AND RH ALT FOR 7F2W-120005	28-20-20-01	-021
CHECK VALVE	28-21-00-02	-267
CHECK VALVE-HYDRAULIC LH	29-10-09-01	-001
CHECK VALVE-HYDRAULIC RH	29-10-09-01	-002
CHECK VALVE-HYDRAULIC LH	29-10-09-01	-004
CHECK VALVE-HYDRAULIC RH	29-10-09-01	-005
CHECK VALVE-HYDRAULIC	29-10-09-01	-075
CHECK VALVE-HYDRAULIC	29-10-09-01	-077
CHECK VALVE-HYDRAULIC	29-10-09-01	-080
CHECK VALVE-HYDRAULIC	29-10-09-01	-150
CHECK VALVE-HYDRAULIC	29-10-09-01	-154
CHECK VALVE-HYDRAULIC	29-10-09-01	-156
CHECK VALVE-HYDRAULIC	29-10-09-01	-225
CHECK VALVE-HYDRAULIC	29-10-09-01	-226
CHECK VALVE-HYDRAULIC	29-10-09-01	-228
CHECK VALVE-HYDRAULIC	29-10-09-01	-300
CHECK VALVE-NOSE GEAR STEERING	32-51-00-01	-091
CHECK VALVE	35-10-20-01	-020
CHECK VALVE	35-10-20-01	-163
CHECK VALVE-VACUUM	37-10-00-01	-007
CHECK VALVE	80-10-00-01	-186
CHECK VALVE-HYDRAULIC	29-10-00-01	-160

© Cessna Aircraft Company

NOMENCLATURE	CH SEC SUBJ FIG	ITEM
C Continued		
CIRCUIT BREAKER LIGHT EMITTING DIODE (LED) PANEL	33-10-05-01	-
CIRCUIT BREAKER PANEL ASSEMBLY - LEFT HAND	24-60-05-01	-
CIRCUIT BREAKER PANEL ASSEMBLY - RIGHT HAND	24-60-05-02	-
CIRCUIT BREAKERS - LEFT HAND PANEL	24-60-05-03	-
CIRCUIT BREAKERS - RIGHT HAND PANEL	24-60-05-04	-
CLAMP	26-11-00-01	-007
CLAMP	26-23-00-01	-009
CLAMP	34-15-05-01	-002
CLIP	26-23-00-01	-007
CLIP	26-23-00-01	-008
COCKPIT AIR DISTRIBUTION - BELOW-FLOOR DUCT	21-25-20-01	-
COCKPIT FORWARD CABIN SKIN BOND ASSEMBLY	53-30-04-02	-
COCKPIT OPENABLE AFT SIDE WINDOW	56-15-00-01	-
COCKPIT OVERHEAD DUCT	21-23-25-01	-
COCKPIT VOICE RECORDER UK301	23-70-00-01	-007
COCKPIT VOICE RECORDER UK301	23-70-00-01	-007A
COCKPIT VOICE RECORDER	23-70-00-01	-
COLLINS ADF-4000 AUTOMATIC DIRECTION FINDER (ADF) SYSTEM	34-53-00-01	-
COLLINS DME-4000 DISTANCE MEASURING EQUIPMENT (DME) SYSTEM	34-55-00-01	-
COLUMN ASSY-LH	27-36-00-01	-150
COLUMN ASSY-RH	27-36-00-01	-151
CONNECTOR-FUEL LH AND RH	28-11-45-01	-002
CONNECTOR-FUEL	28-11-50-01	-001
CONTROL ASSY-TOILET DRAIN	38-30-05-01	-002
CONTROL ASSY-HYDRAULIC REMOTE BLEED LEVER	29-10-80-01	-151
CONTROL BOX UT023	32-47-10-01	-001
CONTROL COLUMN	27-36-00-01	-
CONTROL COLUMN BALANCE	27-36-00-02	-
CONTROL HEAD-COCKPIT VOICE RECORDER	23-70-00-01	-014
CONTROL MANIFOLD ASSY LANDING GEAR VY010	32-30-15-01	-001
CONTROL UNIT-FIRE DETECTOR UT005	26-10-10-01	-001
CONTROL VALVE-LH VT015	80-10-00-01	-150
CONTROL VALVE-RH VT016	80-10-00-01	-151
CONTROL WHEEL	27-14-00-01	-
CONTROL WHEEL ASSY-PILOT	27-14-00-01	-001
CONTROL WHEEL ASSY-COPILOT	27-14-00-01	-002
CONTROLLER-CABIN UF005	21-30-00-01	-001
CONTROLLER-HYDRAULIC POWER TRANSFER VY008	29-21-00-01	-024
COOL AIR DISTRIBUTION - TAILCONE	21-23-00-01	-
COOLING FAN-24 V	21-28-00-01	-019
COUNTERBALANCE ASSEMBLY	52-10-35-01	-
COUPLER	34-50-05-01	-004
COUPLING ASSY	29-10-80-01	-077
COUPLING ASSY	29-10-80-01	-084
COVER-CABIN/GROUND INTERPHONE SYSTEM TAIL	23-50-15-01	-001
COVER-CABIN/GROUND INTERPHONE SYSTEM TAIL ALT FOR 515	23-50-15-01	-001A
COVER-CABIN/GROUND INTERPHONE SYSTEM NOSE	23-50-15-01	-006
COVER-CABIN/GROUND INTERPHONE SYSTEM TAIL ALT FOR 515	23-50-15-01	-006A
COVER-PROBE	25-25-00-01	-014
COVER SET-SOFT ENGINE	25-25-00-01	-006
COVER-WICK	25-25-00-01	-009
COWL LATCH TOOL INSTALLATION	25-10-01-01	-
COWLING LATCH TOOL	25-10-01-01	-001
CREW MASK	35-10-05-01	-001
CREW OXYGEN MASK	35-10-05-01	-
CREW OXYGEN MASK STOWAGE BOXES	35-10-10-01	-
CREW OXYGEN SYSTEM	35-10-00-01	-
CURRENT SENSOR-LH UC300	34-10-25-01	-001
CURRENT SENSOR-RH UF300	34-10-25-01	-002
CURRENT XFORMER TORROID LT002	24-35-00-01	-014

© Cessna Aircraft Company

NOMENCLATURE	CH SEC SUBJ FIG	ITEM
D		
DAMPING - CABIN FLOOR	25-80-02-02	-
DAMPING - CABIN SKINS	25-80-02-04	-
DAMPING - COCKPIT	25-80-02-01	-
DAMPING - ENTRANCE DOOR	25-80-02-03	-
DAMPING - TAILCONE BAGGAGE COMPARTMENT	25-80-02-05	-
DATA LINK UI501 FSO S3100-489	34-59-00-01	-001
DATA LINK UI501 FOR SPARES ONLY	34-59-00-01	-001A
DEFUEL VALVE BRACKET-LH AND RH	28-20-00-03	-250
DEFUELING SYSTEM	28-23-00-01	-
DETECTOR ASSY-FIRE	26-11-00-01	-001
DIGITAL AUDIO SYSTEM	23-50-00-01	-
DIRECT CURRENT (DC) GENERATION	24-30-00-01	-
DISC-GREEN 0.625"	35-10-20-01	-011
DISC-GREEN 0.750"	35-10-20-01	-012
DISTANCE MEASURING EQUIPMENT (DME) ANTENNA	34-55-10-01	-
DME RECEIVER (DME-4000)-TOP UN806	34-55-00-01	-001
DME RECEIVER (DME-4000)-BOTTOM UN808	34-55-00-01	-002
DOOR - SKI TUBE	52-30-40-01	-
DOOR ASSY-ECU EXHAUST	21-50-10-01	-011
DOOR ASSY-SINGLE POINT REFUELING	52-40-07-01	-001
DOOR ASSY-STRINGER ACCESS FWD RH	53-30-02-03	-150
DOOR ASSY-STINGER ACCESS AFT RH	53-30-02-03	-155
DOOR ASSY-STINGER ACCESS CTR RH	53-30-02-03	-161
DOOR ASSY-UPPER COWL LH BONDED	71-10-00-01	-006
DOOR ASSY-UPPER COWL RH BONDED	71-10-00-01	-007
DOOR ASSY-LOWER COWL LH BONDED	71-10-00-01	-008
DOOR ASSY-LOWER COWL RH BONDED	71-10-00-01	-009
DOOR ASSY LH	52-80-15-01	-001
DOOR ASSY RH	52-80-15-01	-004
DOOR BOND ASSY-NOSE LANDING GEAR ACTUATOR	32-20-00-02	-150
DOOR BOND ASSY-RH	55-30-00-03	-075
DOOR WARNING SYSTEM - BAGGAGE AND SERVICE	52-70-50-01	-
DOOR WARNING SYSTEM - ENTRANCE	52-70-00-01	-
DOOR WARNING SYSTEM - FUEL ACCESS	52-70-60-01	-
DORSAL FIN	53-38-00-01	-
DRAIN CABLE CONTROL ASSEMBLY	38-30-05-01	-
DRAIN CUP ASSY	25-25-00-01	-007
DRAIN VALVE-FUEL	28-10-10-01	-001
DUAL OXYGEN BOX ASSY	35-20-10-01	-001
DUCT SENSOR-ACM TEMPERATURE CABIN TT037	21-23-00-01	-023
DUCT SENSOR-ACM TEMPERATURE CABIN TT038	21-23-00-01	-024
E		
EJECTOR JET-VACUUM SYSTEM	37-10-00-01	-089
ELECTRIC HEATED GLASS FORWARD SIDE WINDOWS	56-13-00-01	-
ELECTRIC HEATED WINDSHIELD	56-11-05-01	-
ELECTRIC WINDSHIELD CONTROLLER	30-43-05-01	-
ELECTRIC WNDSHIELD ANTI-ICE CONTROLLER-LH UC009	30-43-05-01	-001
ELECTRIC WNDSHIELD ANTI-ICE CONTROLLER-RH UF021	30-43-05-01	-002
ELECTRONIC CONTROL UNIT-AUXILIARY POWER ENGINE UT018	49-40-05-01	-001
ELECTRONIC EQUIPMENT SHELF - TAILCONE	25-70-00-01	-
ELEVATOR ASSY-LH	55-20-00-01	-013
ELEVATOR ASSY-LH	55-20-00-01	-013A
ELEVATOR ASSY-RH	55-20-00-01	-014
ELEVATOR ASSY-RH	55-20-00-01	-014A
ELEVATOR CONTROL BUNGEE	27-33-25-01	-
ELEVATOR CONTROL CABLES	27-30-05-01	-

© Cessna Aircraft Company

E Continued

NOMENCLATURE	CH SEC SUBJ FIG	ITEM
ELEVATOR CONTROL SYSTEM - FORWARD	27-31-00-01	-
ELEVATOR CONTROL SYSTEM - HORIZONTAL STABILIZER	27-33-00-01	-
ELEVATOR CONTROL SYSTEMS - AFT	27-32-00-01	-
ELEVATOR FEEL AND CENTER BRACKET INSTALLATION	55-20-00-03	-
ELEVATOR INSTALLATION	55-20-00-01	-
ELEVATOR POSITION SENSOR	55-20-10-01	-
ELEVATOR RIB INSTALLATION	55-20-00-02	-
ELEVATOR SECTOR STRUCTURE	55-20-00-04	-
ELEVATOR/PITCH DISCONNECT SYSTEM	27-35-00-01	-
ELT REMOTE SWITCH UI003	25-60-00-01	-029
EMER J-BOX ASSY	24-60-15-01	-001
EMERGENCY BATTERY PACK-AFT UC020	33-50-05-01	-001
EMERGENCY BRAKE CONTROL SYSTEM - CENTER MAIN LANDING GEAR	32-49-00-03	-
EMERGENCY BRAKE CONTROL SYSTEM - FORWARD FAIRING	32-49-00-02	-
EMERGENCY BRAKE CONTROL SYSTEM - NOSE	32-49-00-01	-
EMERGENCY EXIT DOOR	52-20-00-01	-
EMERGENCY EXIT DOOR LATCHING MECHANISM	52-20-10-01	-
EMERGENCY EXIT DOOR WARNING SWITCH	52-70-40-01	-
EMERGENCY LIGHTING	33-50-00-01	-
EMERGENCY LIGHTING BATTERY PACK	33-50-05-01	-
EMERGENCY LOCATOR TRANSMITTER (ELT) SYSTEM	25-60-00-01	-
EMERGENCY MANUAL LANDING GEAR EXTENSION SYSTEM - MAIN LANDING GEAR	32-35-00-01	-
EMERGENCY MANUAL LANDING GEAR EXTENSION SYSTEM - NOSE LANDING GEAR	32-35-00-02	-
EMERGENCY PNEUMATIC LANDING GEAR EXTENSION SYSTEM	32-33-00-01	-
EMERGENCY POWER JUNCTION BOX	24-60-15-01	-
ENGINE ANTI-ICING SYSTEM - AIR INLET	30-20-00-02	-
ENGINE ANTI-ICING SYSTEM - PYLON	30-20-00-01	-
ENGINE BEAM ASSY	53-60-02-01	-
ENGINE COWLING	71-10-00-01	-
ENGINE DRAINS	71-70-00-01	-
ENGINE DRIVEN PUMP-LH	29-10-10-01	-001
ENGINE DRIVEN PUMP-RH	29-10-10-01	-150
ENGINE FIRE BOTTLE	26-20-15-01	-
ENGINE FIRE BOTTLE	26-20-30-01	-017
ENGINE FIRE DETECTION SYSTEM	26-10-00-01	-
ENGINE FIRE SWITCHES	26-20-05-01	-
ENGINE FUEL DISTRIBUTION - LH	73-10-00-01	-
ENGINE FUEL DISTRIBUTION - RH	73-10-00-02	-
ENGINE FUEL INDICATING SYSTEM	73-30-00-01	-
ENGINE ISOLATOR-FWD ENGINE MOUNT ALT FOR 9914534-16	71-20-00-01	-005
ENGINE MOUNTS	71-20-00-01	-
ENGINE NACELLE AIR INLET	71-60-00-01	-
ENGINE VIBRATION MONITORING	77-30-00-01	-
ENTRANCE DOOR PRECATCH ASSEMBLY	52-10-21-01	-
ENTRANCE DOOR SEALS	52-11-00-01	-
ENTRANCE DOOR SOCKET	52-10-09-01	-
ENTRANCE DOOR STEP	52-10-31-01	-
ENTRANCE DOOR STRUCTURE	52-10-00-01	-
ENTRANCE DOOR VENT	52-10-03-01	-
ENTRANCE SPADE DOOR AND DRIVE LINK	52-10-37-01	-
ENVIRONMENTAL CONTROL UNIT	21-50-00-01	-
ENVIRONMENTAL CONTROL UNIT EXHAUST DUCT ASSEMBLY	21-50-10-01	-
ENVIRONMENTAL CONTROL UNIT SUPPORT	21-50-05-01	-
ESCAPE HATCH ASSY FSO 6711253-201	52-20-00-01	-009
ESCAPE HATCH FRAME	53-12-10-01	-
EVMU-ENGINE VIBRATION MONITOR UNIT	77-30-00-01	-001
EXCITER	74-10-00-01	-
EXHAUST CAP ASSY-APU	53-30-02-03	-168
EXHAUST DUCT ASSY-ENVIRONMENTAL CONTROL UNIT	21-50-10-01	-010
EXTENDER ASSY-TAILCONE BAGGAGE DOOR	52-30-00-01	-031

© Cessna Aircraft Company

E Continued

NOMENCLATURE	CH SEC SUBJ FIG	ITEM
EXTERNAL ELECTRICAL POWER RECEPTACLE DOOR	52-40-19-01	-
EXTERNAL POWER RECEPTACLE	24-40-05-01	-
EXTERNALLY SERVICEABLE FLUSH TOILET	38-30-00-01	-
EYE REFERENCE MOUNT INSTALLATION	34-24-01-01	-

F

NOMENCLATURE	CH SEC SUBJ FIG	ITEM
FADEC CX1-LH A UK005	76-12-00-01	-004
FADEC CX1-RH A UK004	76-12-00-01	-005
FADEC CX1-LH B UK007	76-12-00-01	-006
FADEC CX1-RH B UK006	76-12-00-01	-007
FADEC INSTALLATION	76-12-00-01	-
FAIRINGS - CABIN AERODYNAMIC	53-50-00-01	-
FAIRINGS - TAILCONE AERODYNAMIC	53-50-00-03	-
FAIRINGS - WING TO FUSELAGE AERODYNAMIC	53-50-00-02	-
FAIRLEAD INSTALLATION	27-00-02-01	-
FAN-AVIONICS COOLING MN304	21-29-00-01	-002
FAN ASSEMBLY-LH MC001	21-28-00-01	-014
FAN ASSEMBLY-RH MF001	21-28-00-01	-015
FAN ASSY-WINDSHIELD RAIN REMOVAL MN003	30-40-00-01	-001
FAN ASSY-WINDSHIELD RAIN REMOVAL MN003	30-40-00-01A	-001
FDR POSITION SENSOR-LH PH301	55-20-10-01	-001
FDR POSITION SENSOR-RUDDER UV304	55-40-00-02	-001
FDR POSITION SENSOR-LH UL301	57-60-00-03	-001
FDR POSITION SENSOR-RH UR301	57-60-00-03	-002
FEEDTHRU ASSY-LH FWD	53-20-00-02A	-001
FEEDTHRU ASSY-RH FWD	53-20-00-02A	-008
FIBERGLASS BAG INSULATION - AFT BULKHEAD	25-80-00-08	-
FIBERGLASS BAG INSULATION - BAGGAGE COMPARTMENT	25-80-00-07	-
FIBERGLASS BAG INSULATION - CABIN UNDER FLOOR	25-80-00-09	-
FIBERGLASS BAG INSULATION - COCKPIT	25-80-00-01	-
FIBERGLASS BAG INSULATION - EMERGENCY EXIT DOOR	25-80-00-06	-
FIBERGLASS BAG INSULATION - ENTRANCE DOOR	25-80-00-05	-
FIBERGLASS BAG INSULATION - LEFT CABIN SIDEWALL	25-80-00-03	-
FIBERGLASS BAG INSULATION - OVERHEAD CABIN	25-80-00-02	-
FIBERGLASS BAG INSULATION - RIGHT CABIN SIDEWALL	25-80-00-04	-
FILTER ASSY-CD BYPASS	29-10-30-01	-001
FILTER ASSY-NONBYPASS	29-10-30-01	-075
FILTER ASSY	29-10-30-01	-082
FILTER ASSY-NONBYPASS	29-10-30-01	-150
FILTER ASSY-CD BYPASS	29-10-30-01	-156
FILTER ASSY-NONBYPASS	29-10-30-01	-162
FILTER ASSY-NONBYPASS	29-10-30-01	-225
FINGER GUARD	21-28-00-01	-013
FINGER GUARD	21-29-00-01	-007
FIRE DETECTION CONTROL UNIT	26-10-10-01	-
FIRE DETECTOR ASSY-RH ENGINE TE001	26-10-00-01	-001
FIRE EXTINGUISHER FSO A352CS	26-21-00-01	-001
FIRE EXTINGUISHER-OPTION FSO A352CS	26-21-00-01	-006
FIRESEAL-APU	53-30-02-04	-080
FIREWALL SHUTOFF VALVE	29-10-25-01	-
FITTING ASSY	28-11-10-01	-159
FITTING ASSY	52-10-37-01	-096
FLANGE SEAL	21-50-10-01	-008
FLAP ACCESS PANELS AND SEALS	57-51-00-02	-
FLAP ACTUATION SYSTEM	27-50-00-01	-
FLAP CONTROL SYSTEM	27-50-00-02	-
FLAP CONTROLLER ASSY UT012	27-50-00-02	-012

© Cessna Aircraft Company

F Continued

NOMENCLATURE	CH SEC SUBJ FIG	ITEM
FLAP HANDLE ASSY	27-50-00-02	-001
FLAP POWER BOX	27-50-20-01	-
FLAP SEAL-CTR	57-51-00-02	-019
FLAP SEAL-OUTBD	57-51-00-02	-028
FLAPPER VALVE-HOPPER FUEL CHECK	28-11-40-01	-002
FLAPPER VALVE-HOPPER FUEL CHECK	28-11-40-01	-006
FLAPPER VALVE-FUEL CHECK	28-11-40-01	-011
FLAPPER VALVE-FUEL CHECK CWS 128.60	28-11-40-01	-075
FLAPPER VALVE-FUEL CHECK CWS 247.90	28-11-40-01	-076
FLAPPER VALVE-FUEL CHECK CWS 268.05	28-11-40-01	-077
FLAPPER VALVE-FUEL CHECK CWS 128.600	28-11-40-01	-082
FLAPPER VALVE-FUEL CHECK CWS 268.050	28-11-40-01	-083
FLAPS	57-51-00-01	-
FLASHER UV047	33-40-10-01	-003
FLASHER-LH UL005	33-40-17-01	-001
FLASHER-RH UR002	33-40-17-01	-002
FLIGHT COMPARTMENT SPEAKER	23-50-25-01	-
FLIGHT COMPARTMENT WINDOWS - COCKPIT WINDOW SILLS	56-10-00-01	-
FLIGHT DATA RECORDER UK309	31-30-00-01	-001
FLIGHT DATA RECORDER UK309	31-30-00-01	-001A
FLIGHT DATA RECORDER SYSTEM	31-30-00-01	-
FLIGHT HOURMETER	31-10-50-01	-
FLOAT SWITCH-LH SL021	28-20-60-01	-001
FLOAT SWITCH-RH SR022	28-20-60-01	-002
FLOAT SWITCH-LH SL023	28-20-65-01	-001
FLOAT SWITCH-RH SR024	28-20-65-01	-002
FLOAT VALVE-WING TRANSFER FLOAT	28-20-21-01	-001
FLOAT VALVE-OUTBOARD WING FUEL TRANSFER	28-20-21-01	-162
FLOODLIGHT ASSEMBLY-FWD FK001	33-30-20-01	-001
FLOODLIGHT ASSEMBLY-AFT FK003	33-30-20-01	-002
FLOODLIGHT ASSEMBLY-LH FK002	33-30-20-01	-003
FLOORBOARD INSTALLATION - CABIN	53-20-05-02	-
FLOORBOARD INSTALLATION - COCKPIT	53-20-05-01	-
FLOORBOARDS - TAILCONE BAGGAGE COMPARTMENT	53-30-03-02	-
FORWARD ENGINE BEAM FRAME - FS 521.72-FS 526.22	53-60-01-07	-
FORWARD FAIRING FUEL TANK	28-11-55-01	-
FORWARD LOGIC MODULE	24-60-35-01	-
FORWARD OVERBOARD DRAIN	38-32-05-01	-
FORWARD PRESSURE BULKHEAD ASSEMBLY	53-20-00-02	-
FORWARD PRESSURE BULKHEAD BOND ASSEMBLY	53-20-00-02	-015
FORWARD PRESSURE BULKHEAD FEEDTHRU PANELS	53-20-00-02A	-
FORWARD PRESSURE BULKHEAD INSTALLATION	53-20-00-01	-
FORWARD PRESSURIZATION CONTROL SYSTEM	21-31-00-01	-
FORWARD SPAR - VERTICAL FIN	55-30-00-06	-
FRAME INSTALLATION - FS 100.20	53-20-00-04	-
FRAME INSTALLATION - FS 110.80	53-20-00-05	-
FRAME INSTALLATION - FS 121.20	53-20-00-06	-
FRAME INSTALLATION - FS 131.30	53-20-00-07	-
FRAME INSTALLATION - FS 142.00	53-20-00-08	-
FRAME INSTALLATION - FS 157.00	53-20-00-09	-
FRAME INSTALLATION - FS 172.00	53-20-00-10	-
FRAME INSTALLATION - FS 174.35 AND FS 199.65	53-20-00-11	-
FRAME INSTALLATION - FS 178.50 AND FS 195.50	53-22-00-01	-
FRAME INSTALLATION - FS 202.00	53-20-00-12	-
FRAME INSTALLATION - FS 212.50 AND FS 223.35	53-22-00-02	-
FRAME INSTALLATION - FS 240.35 AND FS 253.20	53-22-00-03	-
FRAME INSTALLATION - FS 270.20 AND FS 283.05	53-22-00-04	-
FRAME INSTALLATION - FS 300.05 AND FS 308/309	53-22-00-05	-
FRAME INSTALLATION - FS 91.25	53-20-00-03	-
FROST PANE-LH AND RH	56-13-00-01	-009

© Cessna Aircraft Company

F Continued

NOMENCLATURE	CH SEC SUBJ FIG	ITEM
FUEL BOOST PUMP	28-20-05-01	-
FUEL BOOST PUMP CARTRIDGE	28-20-10-01	-
FUEL DISTRIBUTION SYSTEM - AFT FUSELAGE	28-20-00-02	-
FUEL DISTRIBUTION SYSTEM - FORWARD FAIRING	28-20-00-01	-
FUEL DRAIN VALVES	28-10-10-01	-
FUEL EJECTOR PUMPS	28-20-20-01	-
FUEL FLAPPER CHECK VALVES	28-11-40-01	-
FUEL FLOW TRANSMITTER-LH & RH	73-30-00-01	-001
FUEL MANIFOLD-FORWARD	28-20-00-03	-080
FUEL PRESSURE SWITCH	28-20-40-01	-
FUEL PUMP-MOTIVE FLOW LH	73-10-00-01	-027
FUEL QUANTITY SIGNAL CONDITIONER	28-40-10-01	-
FUEL SYSTEM SCREENS AND STRAINERS	28-20-70-01	-
FUEL TEMPERATURE SENSOR	28-40-20-01	-
FUEL VENT SYSTEM - CENTER WING	28-11-20-01	-
FUEL VENT SYSTEM - FORWARD FAIRING TANK	28-11-30-01	-
FUEL VENT SYSTEM - HOPPER	28-11-27-01	-
FUEL VENT SYSTEM - OUTER WING	28-11-10-01	-
FULL AUTHORITY DIGITAL ENGINE CONTROL (FADEC) SWITCHES	76-12-05-01	-
FUSELAGE FUEL TANK CLOSURES	53-42-03-01	-
FUSELAGE FUEL TANK FAIRING	53-42-02-01	-
FUSELAGE FUEL TANK FRAME - FS 254.75	53-42-04-01	-
FUSELAGE FUEL TANK FRAME - FS 268.90	53-42-04-02	-
FUSELAGE FUEL TANK FRAME - FS 283.053	53-42-04-03	-
FUSELAGE FUEL TANK RIB	53-42-04-04	-
FWD ANTI-COLLISION LIGHT-LH AND RH	33-40-15-01	-021
FWD DUCT ASSY	21-50-10-01	-030
FWD ENGINE ISOLATOR	71-20-00-01	-004
FWD POSTION LIGHT-RED LH AND RH	33-40-15-01	-024
FWD POSTION LIGHT-GREEN LH AND RH	33-40-15-01	-025

G

NOMENCLATURE	CH SEC SUBJ FIG	ITEM
GAC INSTALLATION RACK	22-10-30-01	-002
GAC INSTALLATION RACK	22-10-30-01	-006
GAC-9200 ACTUATOR CONTROL UK307	22-10-30-01	-001
GAC-9200 ACTUATOR CONTROL UK306	22-10-30-01	-005
GAGE-POWER STEERING ACCUMULATOR	32-51-05-01	-026
GARMIN DUAL VHF NAVIGATION (NAV) ANTENNA	34-50-05-01	-
GARMIN G5000 INTEGRATED AVIONICS SYSTEM	34-60-00-01	-
GARMIN GAC 9200 ACTUATOR CONTROLLER	22-10-30-01	-
GARMIN GDC 7400 AIR DATA COMPUTER	34-10-05-01	-
GARMIN GDL 69A DATALINK RECEIVER	34-59-00-01	-
GARMIN GDL-59 WI-FI DATALINK AND FLIGHT PARAMETER RECORDER	31-32-05-01	-
GARMIN GEA-7100 ENGINE/AIRFRAME INTERFACE UNIT	31-40-10-01	-
GARMIN GIA-63W INTEGRATED AVIONICS UNIT	31-40-15-01	-
GARMIN GRA-5500 RADIO ALTIMETER SYSTEM	34-40-00-01	-
GARMIN GSD-41 DATA CONCENTRATOR UNIT (DCU)	31-40-05-01	-
GARMIN GTS-8000 TRAFFIC COLLISION AVOIDANCE SYSTEM (TCAS II)	34-47-00-01	-
GARMIN GTX-3000 TRANSPONDER SYSTEM	34-57-00-01	-
GAS SPRING ASSY-LH	52-40-37-01	-083
GAS SPRING ASSY	52-40-37-01	-231
GASKET-ECU EXHAUST FLANGE	21-50-10-01	-009
GDR 66-VHF DATA LINK UK501	23-11-00-01	-001
GDR-66 MOUNT	23-11-00-01	-002
GEA 7100 ENGINE INTERFACE UNIT-FWD UI411	31-40-10-01	-001
GEA 7100 ENGINE INTERFACE UNIT-LH AFT UK403	31-40-10-01	-004
GEA 7100 ENGINE INTERFACE UNIT-RH AFT UK404	31-40-10-01	-005

© Cessna Aircraft Company

NOMENCLATURE	CH SEC SUBJ FIG	ITEM

G Continued

GEA 7100 REMOTE RACK	31-40-10-01	-002
GEA 7100 REMOTE RACK-LH AND RH AFT	31-40-10-01	-006
GEARBOX	32-51-35-01	-001
GENERATOR-ALTERNATING CURRENT 3 KVA LH UD005	24-20-00-01	-001
GENERATOR-ALTERNATING CURRENT 3 KVA RH UE006	24-20-00-01	-002
GENERATOR-400 AMP BRUSHLESS LH UD001	24-30-00-01	-001
GENERATOR-400 AMP BRUSHLESS RH UE002	24-30-00-01	-003
GENERATOR-AUXILIARY POWER UNIT UT003	24-35-00-01	-001
GENERATOR CONTROL UNIT UT045	24-35-00-01	-012
GENERATOR CONTROL UNIT (GCU)-LH UT043	24-30-15-01	-001
GENERATOR CONTROL UNIT (GCU)-RH UT044	24-30-15-01	-002
GENERATOR CONTROL UNIT (GCU)	24-30-15-01	-
GIA 63 REMOTE RACK-LH AND RH	31-40-15-01	-003
GIA63W INTEGRATED AVIONICS UNIT-LH UI301	31-40-15-01	-001
GIA63W INTEGRATED AVIONICS UNIT-RH UI302	31-40-15-01	-002
GLARESHIELD	25-10-05-01	-
GLARESHIELD LED LIGHT-CTR	33-10-25-01	-003
GLARESHIELD LED LIGHT-LH	33-10-25-01	-005
GLARESHIELD LED LIGHT-RH	33-10-25-01	-006
GLARESHIELD LIGHT STRIP	33-10-25-01	-
GLIDESLOPE ANTENNA AND COUPLER INSTALLATION	34-31-00-01	-
GLOBAL POSITIONING SYSTEM (GPS) ANTENNA	34-51-10-01	-
GMA 36 REMOTE AUDIO-LH UI505	23-50-00-01	-001
GMA 36 REMOTE AUDIO-RH UI504	23-50-00-01	-002
GMA 36 REMOTE RACK	23-50-00-01	-003
GMC-7200 AFCS MODE CONTROLLER	22-10-05-01	-
GMC7200 AP MODE CONTROL UI303	22-10-05-01	-001
GRA-5500 MOUNT	34-40-00-01	-002
GRA-5500 RADIO ALTIMETER UK801	34-40-00-01	-001
GRAVITY FLOW SCREEN	28-20-70-01	-001
GRILLE ASSY-ECU EXHAUST	21-50-10-01	-045
GROUND RECOGNITION LIGHT FY900	33-40-20-01	-001
GROUND RECOGNITION LIGHT FV007	33-40-20-01	-004
GROUND RECOGNITION LIGHT	33-40-20-01	-
GROUND START DOOR	52-40-23-01	-
GSA-9000 SERVO ACTUATOR	22-10-10-01	-001
GSD 41-DATA CONCENTRATOR #1 FWD UI410	31-40-05-01	-001
GSD 41-DATA CONCENTRATOR #2 AFT UK401	31-40-05-01	-006
GSD 41-DATA CONCENTRATOR #3 AFT UK402	31-40-05-01	-007
GSM 9100 SERVO GEARBOX	22-10-10-01	-002
GSR 56 TRANSCEIVER #1 UK521	23-15-05-01	-001
GSR 56 TRANSCEIVER #2 UK508	23-15-05-01	-002
GSR 56 TRANSCEIVER INSTALLATION	23-15-05-01	-
GTC 570 CONTROLLER-LH UI407	34-60-00-01	-075
GTC 570 CONTROLLER-RH UI404	34-60-00-01	-076
GTC 570 CONTROLLER-LH UI405	34-60-00-01	-088
GTC 570 CONTROLLER-RH UI406	34-60-00-01	-089
GTS 8XX VERT MOUNT KIT	34-47-00-01	-003
GTS TCAS I/II PROCESSOR UN804	34-47-00-01	-001
GTS WATERPROOFNESS KIT	34-47-00-01	-002
GTX 3000 TRANSPONDER-LH UN801	34-57-00-01	-001
GTX 3000 TRANSPONDER-RH UN802	34-57-00-01	-002
GTX-3000 MOUNT-LH AND RH	34-57-00-01	-003
GWX 70 ANTENNA YN800	34-43-00-01	-002
GWX 70 RADAR UN800	34-43-00-01	-001

H

HA - PROX BI2U-EG08-AN6X-SC031	27-25-00-02	-023

© Cessna Aircraft Company

H Continued

NOMENCLATURE	CH SEC SUBJ FIG	ITEM
HA - PROX BI2U-EG08-AN6X-SC033	27-25-00-02	-024
HA - PROX BI2U-EG08-AN6X-SF030	27-25-00-02	-025
HA - PROX BI2U-EG08-AN6X-SF032	27-25-00-02	-026
HA - RUDDER PEDAL FORCE-PC310	27-25-00-02	-015
HA - RUDDER PEDAL FORCE-PC311	27-25-00-02	-016
HA - RUDDER PEDAL FORCE-PF310	27-25-00-02	-017
HA - RUDDER PEDAL FORCE-PF311	27-25-00-02	-018
HA - RVDT 3A11200321-2-UC043	27-25-00-02	-028
HA - RVDT 3A11200321-2-LH UC041	27-35-00-02	-007
HA - RVDT 3A11200321-2-RH UF041	27-35-00-02	-007A
HANDLE ASSY	52-30-20-01	-002
HANDLE-STRIKER ASSY-UPR LH OR LWR RH SIDE	56-15-00-01	-012
HANDLE-STRIKER ASSY-UPR RH OR LWR LH SIDE	56-15-00-01	-013
HANDRAIL AND TELESCOPING SUPPORT STRUTS	52-10-19-01	-
HANDWHEEL	32-51-35-01	-003
HARNESS ASSY-TAILCONE HF RECEIVER/EXCITER	23-13-00-01	-075
HARNESS ASSY-RVDT LH #4 PANEL UL401	27-63-05-01	-001
HARNESS ASSY-RVDT RH #10 PANEL UR401	27-63-05-01	-002
HARNESS ASSY-RVDT LH #3 PANEL W/FDR UL303	27-63-05-01	-003
HARNESS ASSY-RVDT LH #5 PANEL W/FDR UL304	27-63-05-01	-004
HARNESS ASSY-RVDT RH #6 PANEL W/FDR UR302	27-63-05-01	-005
HARNESS ASSY-RVDT RH #7 PANEL W/FDR UR303	27-63-05-01	-006
HEAT EXCHANGER-HIGH PRESSURE BLEED AIR	36-10-20-02	-075
HEAT SHIELD ASSY	25-10-01-02	-005
HF COMMUNICATION SYSTEM	23-13-00-01	-
HI-POWER INMARSAT LOW NOISE AMP (LNA) UV502	23-15-00-01	-091
HIGH PRESSURE BLEED AIR - EXHAUST	36-10-20-01	-
HINGE ASSY	52-40-01-01	-012
HINGE BLADE	52-40-45-01	-005
HINGE FITTING ASSY-RH INBD STABILIZER FOR SPARES ONLY	55-10-00-01	-151A
HINGE HALF-BLEED AIR INLET DOOR	36-10-20-03	-008
HINGE PLATE ASSY-STABILIZER CTR INBOARD	55-10-00-01	-229
HINGE PLATE ASSY-STABILIZER CTR OUTBOARD	55-10-00-01	-236
HINGE PLATE ASSY-STABILIZER OUTBOARD	55-10-00-01	-243
HORIZONTAL STABILIZER	55-10-00-01	-
HORIZONTAL STABILIZER ANTI-ICING SYSTEM	30-13-00-01	-
HORIZONTAL STABILIZER ASSY	55-10-00-01	-075
HORIZONTAL STABILIZER ASSY	55-10-00-01	-075A
HORIZONTAL STABILIZER CONTROL TRIM SYSTEM	27-40-00-01	-
HORIZONTAL STABILIZER RIB INSTALLATIONS	55-10-00-02	-
HORIZONTAL STABILIZER SKIN	55-10-10-01	-
HORIZONTAL STABILIZER WIPER PLATES	55-10-11-01	-
HOSE ASSY-HYDRAULIC CASE DRAIN	29-10-10-01	-079
HOSE ASSY-RH HYDRAULIC OUTLET	29-10-10-01	-162
HOSE ASSY-RH HYDRAULIC INLET	29-10-10-01	-167
HOSE ASSY-RH HYDRAULIC CASE DRAIN	29-10-10-01	-229
HOSE ASSY-FUEL OUTLET LH	73-10-00-01	-001
HOSE ASSY-FUEL INLET LH	73-10-00-01	-005
HOSE ASSY-FUEL METERING LH	73-10-00-01	-013
HOSE ASSY-FUEL BYPASS	73-10-00-01	-023
HOURMETER UI004	31-10-50-01	-001
HOUSING-LATCH LOWER RH NS 126.00	71-10-00-01	-162
HOUSING-LATCH LOWER RH NS 100.00	71-10-00-01	-164
HOUSING-LATCH LOWER RH NS 76.00	71-10-00-01	-166
HOUSING-LATCH LOWER RH NS 52.00	71-10-00-01	-168
HOUSING ASSY-PRESSURE REFUEL	28-21-00-01	-024
HOUSING ASSY-LATCH UPPER RH NS 126.00	71-10-00-01	-151
HOUSING ASSY-LATCH UPPER RH NS 100.00	71-10-00-01	-153
HOUSING ASSY-LATCH UPPER RH NS 76.00	71-10-00-01	-155
HOUSING ASSY-LATCH UPPER RH NS 52.00	71-10-00-01	-157

© Cessna Aircraft Company

H Continued

NOMENCLATURE	CH SEC SUBJ FIG	ITEM
HSTA CONTROLLER ASSY UV004	27-40-00-01	-015
HSTA CONTROLLER ASSY UV005	27-40-00-01	-016
HSTA FILTER ASSY UV006	27-40-00-01	-020
HUB CAP ASSY-MAIN LANDING GEAR	32-41-20-01	-009
HYDRAULIC ACCESS DOOR	52-40-11-01	-
HYDRAULIC ACCUMULATOR	29-23-05-01	-
HYDRAULIC CHECK VALVES	29-10-09-01	-
HYDRAULIC GROUND SERVICE CONNECTION SYSTEM	29-10-80-01	-
HYDRAULIC POWER TRANSFER UNIT	29-21-00-01	-
HYDRAULIC PRESSURE INDICATING	29-30-00-01	-
HYDRAULIC PUMPS AND LINES - ENGINE DRIVEN	29-10-10-01	-
HYDRAULIC RELIEF/UNLOADING VALVES	29-10-07-01	-
HYDRAULIC SYSTEM - CENTER FUSELAGE	29-10-00-09	-
HYDRAULIC SYSTEM - CENTER WING AFT	29-10-00-10	-
HYDRAULIC SYSTEM - EMPENNAGE	29-10-00-11	-
HYDRAULIC SYSTEM - LH PYLON	29-10-00-01	-
HYDRAULIC SYSTEM - OUTER WING AFT	29-10-00-12	-
HYDRAULIC SYSTEM - RH AFT FAIRING	29-10-00-04	-
HYDRAULIC SYSTEM - RH PYLON	29-10-00-02	-
HYDRAULIC SYSTEM - RUDDER STANDBY	29-23-00-01	-
HYDRAULIC SYSTEM AUXILIARY PUMP	29-20-05-01	-
HYDRAULIC SYSTEM FILTERS	29-10-30-01	-
HYDRAULIC SYSTEM RESERVOIR	29-10-05-01	-

I

NOMENCLATURE	CH SEC SUBJ FIG	ITEM
ICE DETECTION LIGHT LH FY003	33-40-25-01	-001
ICE DETECTION LIGHT RH FY004	33-40-25-01	-002
ICE DETECTOR LIGHT-LH FC001	33-40-30-01	-001
ICE DETECTOR LIGHT-RH FF001	33-40-30-01	-002
IGNITION SYSTEM IGNITER	74-20-00-01	-
IM-950 CONFIGURATION MODULE-LH UN337	34-20-00-01	-012
IM-950 CONFIGURATION MODULE-RH UN336	34-20-00-01	-013
INDICATOR	35-10-20-01	-010
INFLATABLE SEAL-ENTRANCE DOOR	52-11-00-01	-046
INFLATABLE SEAL-ENTRANCE DOOR	52-11-20-01	-007
INLET ASSY-APU GENERATOR AIR	24-35-00-01	-009
INLET DOOR ASSY-LH BLEED AIR	36-10-20-03	-005
INLET DOOR ASSY-RH BLEED AIR	36-10-20-03	-006
INMARSAT FILTER UK564	23-15-00-01	-014
INMARSAT SATCOM IGA YV501	23-15-00-01	-086
INNER DOOR HANDLE ASSEMBLY	52-10-11-01	-
INSTRUMENT PANEL COOLING	21-28-00-01	-
INSTRUMENT PANEL INSTALLATION	53-20-03-01	-
INSTRUMENT PANEL LOWER ASSEMBLY	53-20-03-04	-
INSULATION - BAGGAGE COMPARTMENT DOOR BLANKET	25-80-01-05	-
INTAKE COVER TIEDOWN INSTALLATION	25-10-01-02	-
INTERCOSTAL INSTALLATION - FORWARD FAIRING	53-20-00-13	-
INTERCOSTAL INSTALLATION - S-1 FORWARD CABIN	53-20-02-05	-
INTERCOSTAL INSTALLATION - S-12L AND S-12R FORWARD CABIN	53-20-02-09	-
INTERCOSTAL INSTALLATION - S-3L AND S-3R FORWARD CABIN	53-20-02-06	-
INTERCOSTAL INSTALLATION - S-5L AND S-5R FORWARD CABIN	53-20-02-07	-
INTERCOSTAL INSTALLATION - S-8L AND S-8R FORWARD CABIN	53-20-02-08	-
INVERTER-115 VOLT DC UK903	24-20-20-01	-001
INVERTER-230 VOLT DC UK905	24-20-20-01	-002
INVERTER INSTALLATION	24-20-20-01	-
IRIDIUM FILTER UV501	23-15-00-01	-089
IRIDIUM/GPS ANTENNA-PASSIVE LH YC557	23-15-45-01	-001

© Cessna Aircraft Company

NOMENCLATURE	CH SEC SUBJ FIG	ITEM
I Continued		
IRIDIUM/GPS ANTENNA-PASSIVE RH YF558	23-15-45-01	-002
ISOLATION VALVE-PRESSURIZATION	21-35-00-01	-008
ISOLATION VALVE VT007	36-10-20-04	-097
J		
JACK-PHONE CABIN/GROUND INTERPHONE SYSTEM TAIL JT501	23-50-15-01	-003
JACK-MIC CABIN/GROUND INTERPHONE SYSTEM TAIL JT502	23-50-15-01	-004
JACK-PHONE CABIN/GROUND INTERPHONE SYSTEM NOSE JN502	23-50-15-01	-008
JACK-MIC CABIN/GROUND INTERPHONE SYSTEM NOSE JN501	23-50-15-01	-009
JUMPER ASSY-FUEL BOOST PUMP	28-20-05-01	-028
JUMPER ASSY-MAIN LANDING GEAR ELECTRICAL BONDING	32-10-00-01	-001
JUMPER ASSY-LH AND RH NOSE LANDING GEAR DOOR ELECTRICAL BONDING	32-20-00-02	-093
JUMPER ASSY-NOSE ACCESS DOOR	52-40-37-01	-165
JUMPER ASSY-STABILIZER TO VERTICAL STABILIZER	55-10-00-01	-032
JUMPER ASSY-ELEVATOR TO STABILIZER	55-20-00-01	-001
JUMPER ASSY-RUDDER GROUND	55-40-00-01	-027
JUMPER ASSY	55-40-00-01	-101
JUNCTION BOX STRUCTURE INSTALLATION	24-60-00-01	-
K		
KRX-1053 RECEIVER/EXCITER-HF1 VENDOR NO. 064-01073-0102(SW MOD 02/01 ONLY)	23-13-00-01	-001
KRX-1053 RECEIVER/EXCITER-HF2 VENDOR NO. 064-01073-0102(SW MOD 02/01 ONLY)	23-13-00-01	-002
KRX-1053 TRAY ASSY	23-13-00-01	-003
L		
L-3 COMMUNICATIONS GH-3900 SECONDARY FLIGHT DISPLAY	34-15-05-01	-
L3 COMMUNICATIONS WX-500 STORMSCOPE	34-47-05-01	-
LADDER ASSY-BAGGAGE COMPARTMENT	25-50-15-01	-011
LADDER ASSY-UPR	25-50-15-01	-030
LAMP-28V 0.7A	33-30-10-01	-004
LAMP	33-30-30-01	-003
LAMP-TAXI LIGHT LH PAR-36 FG001	33-40-35-01	-001
LAMP-TAXI LIGHT RH PAR-36 FG002	33-40-35-01	-002
LAMP-TAXI LIGHT LH AND RH ALT FOR 4594	33-40-35-01	-003
LANDING GEAR CONTROL MANIFOLD	32-30-15-01	-
LANDING GEAR CONTROL UNIT	32-30-10-01	-
LANDING GEAR DOOR INSTALLATION	32-10-30-01	-
LANDING GEAR DOORS	32-10-30-01	-001
LANDING GEAR EMERGENCY PNEUMATIC STORAGE BOTTLE	32-33-05-01	-
LANDING GEAR MODULE UI002	32-30-10-01	-001
LANDING GEAR POSITION AND WARNING SYSTEM	32-61-00-01	-
LANDING LIGHTS	33-40-35-02	-
LATCH	52-40-07-01	-006
LATCH ASSY-SPADE DOOR	52-10-37-01	-075
LATCH ASSY-FWD SN001	52-40-37-01	-076
LATCH ASSY-AFT SN005	52-40-37-01	-077
LATCH ASSY-FWD SN004	52-40-37-01	-225
LATCH ASSY-AFT SN006	52-40-37-01	-226
LATCH ASSY-FAIRING LOWER CENTER	52-40-49-01	-004
LATCH ASSY-LH AND RH	52-40-51-01	-011
LATCH ASSY-LH AND RH	52-40-51-01	-031
LCR-100N HYBRID NAVIGATOR-LH FSO S3100-604 UN303	34-20-00-01	-001
LCR-100N HYBRID NAVIGATOR-LH UN303	34-20-00-01	-001A

© Cessna Aircraft Company

L Continued

NOMENCLATURE	CH SEC SUBJ FIG	ITEM
LCR-100N HYBRID NAVIGATOR-RH FSO S3100-604 UN304	34-20-00-01	-002
LCR-100N HYBRID NAVIGATOR-RH UN304	34-20-00-01	-002A
LCR-100N TRAY W/FAN-LH AND RH	34-20-00-01	-003
LCR-XXXX CONFIG MODULE-LH UN305	34-20-00-01	-005
LCR-XXXX CONFIG MODULE-RH UN306	34-20-00-01	-006
LEAD-ACID BATTERY	24-30-40-01	-
LEADING EDGE ASSY-INBD LH WING	57-40-00-01	-001
LEADING EDGE ASSY-INBD RH WING	57-40-00-01	-002
LED LIGHT ASSY FR024	33-50-00-01	-001
LED PANEL-MIC JACK LH	23-50-20-01	-001
LED PANEL-MIC JACK RH	23-50-20-01	-002
LED PANEL-CIRCUIT BREAKER LH	33-10-05-01	-001
LED PANEL-CIRCUIT BREAKER RH	33-10-05-01	-004
LED PANEL-LH SWITCH	33-10-10-01	-001
LED PANEL-RH SWITCH	33-10-10-01	-003
LED PANEL-AUTO-THROTTLE FSO 9914113-202	33-10-15-01	-001
LED PANEL-AUTO-THROTTLE FSO 9914113-202	33-10-15-01	-001A
LED PANEL-AUTO-THROTTLE FOR SPARES ONLY	33-10-15-01	-001B
LED PANEL-AUTO-THROTTLE	33-10-15-01	-001C
LED PANEL-FWD LH PEDESTAL	33-10-20-01	-001
LED PANEL-FWD RH PEDESTAL	33-10-20-01	-003
LED PANEL-AFT LH PEDESTAL	33-10-20-01	-009
LED PANEL-AFT RH PEDESTAL	33-10-20-01	-010
LED PANEL-AFT PEDESTAL	33-10-20-01	-013
LED PANEL-OVERHEAD LIGHTS	33-10-20-01	-015
LEFT FORWARD PEDESTAL SWITCH PANEL	31-10-20-01	-
LEFT SWITCH PANEL	31-10-10-01	-
LENS ASSY-LH LANDING LIGHT	33-40-35-02	-018
LENS ASSY-RH LANDING LIGHT	33-40-35-02	-019
LEVEL INDICATOR-CTR INBD FUEL MAGNETIC	28-40-15-01	-002
LEVEL INDICATOR-CTR OTBD FUEL MAGNETIC	28-40-15-01	-003
LEVEL INDICATOR-WING FUEL MAGNETIC	28-40-15-01	-001
LEVELING POINTS	53-40-00-01	-
LH POWER JUNCTION BOX	24-60-10-01	-
LIGHT FT005	33-30-10-01	-011
LIGHT ASSY FT003	33-30-10-01	-001
LIGHT ASSY FR002	33-30-30-01	-001
LIGHT ASSY-TAXI LH	33-40-35-01	-007
LIGHT ASSY-TAXI RH	33-40-35-01	-008
LIGHT ASSY-PUSH TO TEST INDICATOR OVERFILL (L361V)	38-30-00-02	-002
LIGHT ASSY-PUSH TO TEST INDICATOR PRECHARGE L362V	38-30-00-02	-003
LIGHTING AND PEDESTAL LIGHT EMITTING DIODE (LED) PANEL	33-10-20-01	-
LINE ASSY	35-10-20-01	-150
LINER	26-11-00-01	-008
LITEF LCR-100N HYBRID NAVIGATION SYSTEM (HNS)	34-20-00-01	-
LOCK ASSY-ENTRANCE DOOR	52-10-13-01	-021
LONG AXLE	52-10-35-01	-019
LOW FUEL FLOAT SWITCH	28-20-60-01	-
LOWER AFT CABIN INTERCOSTAL	53-23-00-02	-
LOWER COCKPIT FORWARD CABIN SKIN ASSEMBLY	53-30-04-01	-
LOWER DUCT ASSY	21-50-10-01	-043
LOWER FAIRING ACCESS DOORS	52-40-49-01	-
LOWER LINK ASSY-STABILIZER SCISSOR	55-10-00-01	-012
LOWER SEAL	21-50-10-01	-035
LOWER SEAL	21-50-10-01	-039
LOWER SILL INSTALLATION - COCKPIT	53-20-02-04	-
LOWER SKIN ASSEMBLY - COCKPIT	53-20-01-04	-
LOWER SKIN ASSY	53-30-04-01	-001
LOWER SKIN BOND ASSEMBLY - COCKPIT	53-20-01-05	-
LOWER SKIN BOND ASSY	53-30-04-01	-075

© Cessna Aircraft Company

NOMENCLATURE	CH SEC SUBJ FIG	ITEM

L Continued

LOWER SKIN INSTALLATION - COCKPIT WINDOWS	53-20-01-06	-
LOWER YAW DAMPENER ACTUATOR-FWD JV301	27-20-00-01	-089
LOWER YAW DAMPENER ACTUATOR-AFT JV302	27-20-00-01	-090
LUBRICATION FITTING-AFT	32-10-00-01	-020
LUBRICATION FITTING-FWD	32-10-00-01	-022

M

MAGNETIC FUEL LEVEL INDICATOR	28-40-15-01	-
MAGNETOMETER INSTALLATION	34-21-10-01	-
MAIN ENGINE AIR START SYSTEM	80-10-00-01	-
MAIN HYDRAULIC SYSTEM - AILERON AND SLAT CONTROL	29-10-00-08	-
MAIN HYDRAULIC SYSTEM - LH AFT FAIRING	29-10-00-06	-
MAIN HYDRAULIC SYSTEM - MID FAIRING	29-10-00-05	-
MAIN HYDRAULIC SYSTEM - RH FORWARD FAIRING	29-10-00-07	-
MAIN LANDING GEAR ACTUATOR	32-30-30-01	-
MAIN LANDING GEAR ASSEMBLY	32-10-00-01	-
MAIN LANDING GEAR ASSY-LH WHITE	32-10-00-01	-026
MAIN LANDING GEAR ASSY-LH WHITE	32-10-00-01	-026A
MAIN LANDING GEAR ASSY-LH GRAY	32-10-00-01	-026B
MAIN LANDING GEAR ASSY-LH GRAY	32-10-00-01	-026C
MAIN LANDING GEAR ASSY-RH WHITE	32-10-00-01	-027
MAIN LANDING GEAR ASSY-RH WHITE	32-10-00-01	-027A
MAIN LANDING GEAR ASSY-RH GRAY	32-10-00-01	-027B
MAIN LANDING GEAR ASSY-RH GRAY	32-10-00-01	-027C
MAIN LANDING GEAR BRAKE CONTROL SYSTEM	32-43-00-01	-
MAIN LANDING GEAR DOORS	52-80-00-01	-
MAIN LANDING GEAR EXTENSION AND RETRACTION	32-30-00-02	-
MAIN LANDING GEAR EXTERNAL FRAME STRUCTURE - FS 414.00	57-10-00-01	-
MAIN LANDING GEAR HYDRAULIC BRAKE CONTROL SYSTEM	32-43-00-02	-
MAIN LANDING GEAR UPLOCK	32-31-25-01	-
MAIN LANDING GEAR UPLOCK STRUCTURE	57-21-00-01	-
MAIN LANDING GEAR WHEEL WELL EXTERNAL FRAMES - FS446.38	57-21-01-01	-
MAIN LANDING GEAR WHEELS AND TIRES	32-41-20-01	-
MAIN SPAR ASSEMBLY	57-20-00-07	-
MAIN SPAR INSTALLATION	57-20-00-06	-
MAINTENANCE JACKS	23-50-15-01	-
MANIFOLD-HYDRAULIC FSO 6717278-5	29-10-00-04	-254
MANIFOLD ASSY-HYDRAULIC	29-10-00-04	-254A
MANIFOLD ASSY-HYDRAULIC FSO 6717278-3	29-10-00-05	-150
MANIFOLD ASSY-HYDRAULIC	29-10-00-05	-150A
MANIFOLD ASSY-RUDDER STANDBY	29-23-00-01	-150
MANUAL SHUTOFF VALVE	29-10-80-01	-001
MANUAL SHUTOFF VALVE	29-10-80-01	-089
MANUAL SHUTOFF VALVE	29-23-00-01	-385
MARKER BEACON ANTENNA	34-30-05-01	-
MASTER CAUTION AND MASTER WARNING	31-51-00-01	-
MEMORY CARD-UQAR	31-37-00-01	-002
MIC ASSY-COCKPIT VOICE RECORDER	23-70-00-01	-001
MICROPHONE-COCKPIT VOICE RECORDER	23-70-00-01	-003
MID AND AFT FAIRING DOORS	52-40-51-01	-
MID PRESSURE BULKHEAD	53-23-00-03	-
MID PRESSURE BULKHEAD FEEDTHRU PANELS	53-23-00-03A	-
MISCELLANEOUS EQUIPMENT	25-25-00-01	-
MIXING MUFF-AIR DISTRIBUTION	21-25-00-01	-014
MOISTURE DRAIN SEALS	53-10-05-01	-
MOORING RING INSTALLATION - LIFE RAFT	25-10-01-03	-
MOTIVE FLOW PRESSURE SWITCH	28-20-45-01	-

© Cessna Aircraft Company

M Continued

NOMENCLATURE	CH SEC SUBJ FIG	ITEM
MOTIVE FLOW SHUTOFF VALVE	28-20-35-01	-
MOTOR ACTUATOR-LH FUEL FIREWALL SHUTOFF VALVE ML007	28-20-30-01	-001
MOTOR ACTUATOR-RH FUEL FIREWALL SHUTOFF VALVE MR008	28-20-30-01	-002
MOTOR ACTUATOR-LH FUEL TRANSFER SHUTOFF VALVE ML003	28-20-30-01	-017
MOTOR ACTUATOR-RH FUEL TRANSFER SHUTOFF VALVE MR004	28-20-30-01	-018
MOTOR ACTUATOR-FUEL CROSSFLOW SHUTOFF VALVE ML005	28-20-30-01	-075
MOTOR ACTUATOR-FUEL CROSSFEED SHUTOFF VALVE MR006	28-20-30-01	-076
MOUNT-APU ENGINE	49-10-00-01	-005
MOUNTING BRACKET	35-10-20-01	-102
MOUNTING TRAY	23-15-00-01	-005
MOUNTING TRAY	31-30-00-01	-002
MOUNTING TRAY-LH AND RH	34-20-00-01	-010
MOUNTING TRAY-MMT-120	34-53-00-01	-002
MOUNTING TRAY (AXXESS)	23-15-00-01	-002
MUFFLER ASSY-APU EXHAUST	49-80-00-01	-004
MUFFLER ASSY-CONDITIONED AIR	21-25-00-01	-077
MULITFUNCTION FLIGHT DISPLAY-CTR GDU-1400W DISPLAY UNIT UI403	34-60-00-01	-002A
MULTIFUNCTION FLIGHT DISPLAY-CTR GDU-1400W DISPLAY UNIT FSO S3100-611 UI403	34-60-00-01	-002

N

NOMENCLATURE	CH SEC SUBJ FIG	ITEM
NACA SCOOP ASSY	71-60-00-01	-027
NACELLE ASSY-LH	71-10-00-01	-001
NACELLE ASSY-RH	71-10-00-01	-002
NAV ANTENNA YV601	34-50-05-01	-001
NICKEL-CADMIUM BATTERY	24-30-35-01	-
NOSE AVIONICS COOLING	21-29-00-01	-
NOSE BALLAST INSTALLATION	53-10-12-01	-
NOSE COMPARTMENT DOORS	52-40-37-01	-
NOSE DIVERTER SUPPORT INSTALLATION	53-10-10-02	-
NOSE FRAME INSTALLATION - FS 24.60 AND FS 43.30	53-10-01-01	-
NOSE FRAME INSTALLATION - FS 59.00 AND FS 75.20	53-10-01-02	-
NOSE GEAR ACTUATOR HOUSING ASSEMBLY	53-12-00-02	-
NOSE GEAR ACTUATOR HOUSING INSTALLATION	53-12-00-01	-
NOSE GEAR HYDRAULIC SYSTEM	32-30-00-03	-
NOSE LANDING GEAR ACTUATOR	32-30-20-01	-
NOSE LANDING GEAR ASSEMBLY	32-20-00-01	-
NOSE LANDING GEAR DOORS	32-20-00-02	-
NOSE LANDING GEAR DOORS	52-80-15-01	-
NOSE LANDING GEAR EXTENSION AND RETRACTION	32-30-00-01	-
NOSE LANDING GEAR UPLOCK	32-31-05-01	-
NOSE LANDING GEAR WHEELS AND TIRES	32-41-05-01	-
NOSE RADOME ASSY FSO 6713101-201	53-10-10-01	-001
NOSE RADOME EROSION BOOT	53-10-10-01	-079
NOSE RADOME INSTALLATION	53-10-10-01	-
NOSE SKIN INSTALLATION	53-10-00-02	-
NOSE STRUCTURE INSTALLATION	53-10-00-01	-
NOSE WHEEL STEERING	32-51-00-01	-
NOSE WHEEL STEERING ACCUMULATOR	32-51-05-01	-
NOSE WHEEL STEERING CONTROL DRIVE	32-51-35-01	-
NOSE WHEELWELL ASSEMBLY	53-15-00-02	-
NOSE WHEELWELL INSTALLATION	53-15-00-01	-
NOSEWHEEL STEERING ISOLATION VALVE	32-50-25-01	-
NOSEWHEEL STEERING ISOLATION VALVE	32-51-25-01	-
NOZZLE ASSY-LH FIRE EXTINGUISHER	26-20-30-01	-014
NOZZLE ASSY-RH FIRE EXTINGUISHER	26-20-30-01	-015
NOZZLE-ACM AIR INLET	21-27-00-01	-010

© Cessna Aircraft Company

NOMENCLATURE	CH SEC SUBJ FIG	ITEM
O		
O2 BOTTLE ASSY	35-10-20-01	-001
O2 BOTTLE ASSY	35-10-20-01	-101A
OIL FILTER - ENGINE	79-20-00-01	-
OIL INDICATING SYSTEM	79-30-00-01	-
OIL SERVICE DOOR	52-40-45-01	-
OLEO ASSY-MAIN LANDING GEAR LH & RH WHITE	32-10-00-01	-111
OLEO ASSY-MAIN LANDING GEAR LH & RH GRAY	32-10-00-01	-111A
OUTBOARD WING FRONT SPAR ASSY	57-20-00-04	-
OUTBOARD WING STRUCTURE ASSEMBLY	57-20-00-08	-
OUTER DOOR HANDLE	52-10-13-01	-
OVERHEAD LIGHT SWITCH PANEL	33-10-35-01	-
OVERINFLATION VALVE	32-41-20-01	-008
OXYGEN BOTTLE ASSY	35-10-20-01	-101
OXYGEN MASK-OPTION	35-10-05-01	-002
OXYGEN PRESSURE SWITCH SN010	35-10-20-01	-018
OXYGEN PRESSURE SWITCH SN009	35-10-20-01	-164
OXYGEN PRESSURE TRANSDUCER-VENDOR PART NO. APT-389-1000-2400SG UN001	35-10-20-01	-166
OXYGEN SYSTEM	35-10-20-01	-
OZONE CONVERTER	21-70-05-01	-003
OZONE CONVERTER	21-70-05-01	-
P		
PAD-NOSE JACKSTAND	25-25-00-01	-004
PAD-WING JACKSTAND	25-25-00-01	-005
PANEL ASSY-FWD LH PEDESTAL	31-10-20-01	-002
PANEL ASSY-FWD RH PEDESTAL	31-10-25-01	-002
PARKING BRAKE CONTROL SYSTEM	32-45-00-01	-
PARTICULATE TRAP ASSY	36-15-00-01	-076
PASSENGER COMPARTMENT WINDOWS	56-20-00-01	-
PASSENGER OXYGEN MASK	35-20-10-01	-
PASSENGER OXYGEN SYSTEM	35-20-00-01	-
PEDESTAL ASSY	53-20-04-01	-001
PEDESTAL ASSY	53-20-04-01	-001A
PEDESTAL INSTALLATION	53-20-04-01	-
PILLOW BLOCK BASE	27-32-00-01	-100
PIN-TAILCONE BAGGAGE DOOR	52-30-20-01	-079
PIN	55-10-00-01	-010
PIN LATCH	52-40-45-01	-006
PITCH POSITION INSTALLATION	27-35-00-02	-
PITOT SYSTEM	34-10-00-01	-
PITOT TUBE-LH TN001	34-10-00-01	-001
PITOT TUBE-RH TN002	34-10-00-01	-002
PITOT TUBE TN003	34-10-00-01	-016
PITOT TUBE COVER KIT	25-25-00-01	-003
PIVOT FITTING ASSY	55-10-00-01	-089
PLATES - CENTER FUSELAGE ACCESS	53-30-00-01	-
PLATES - TAILCONE ACCESS	53-30-03-05	-
PLENUM, BLOWER	30-40-00-01	-013
PLENUM, BLOWER	30-40-00-01A	-022
PLUG-OVERINFLATION	32-41-05-01	-012
PORT ASSY-HIGH PRESSURE BLEED AIR LH AND RH	36-10-20-02	-002
PORT ASSY-LOW PRESSURE BLEED LH AND RH	36-10-20-04	-001
PORTABLE FIRE EXTINGUISHER	26-21-00-01	-
POSITION SENSOR-FLAP LH UL003	27-50-00-01	-464
POSITION SENSOR-FLAP RH UL004	27-50-00-01	-465
POWER BRAKE AND ANTISKID SYSTEM	32-47-00-01	-
POWER CONTROL UNIT-LH UD003 FSO 9914216-6	24-20-10-01	-001

© Cessna Aircraft Company

P Continued

NOMENCLATURE	CH SEC SUBJ FIG	ITEM
POWER CONTROL UNIT-RH UE004 FSO 9914216-6	24-20-10-01	-003
POWER CONTROL UNIT UL001	27-10-50-01	-075
POWER CONTROL UNIT UL002	27-10-50-01	-076
POWER CONTROL UNIT-RUDDER UPPER UV005	27-20-15-01	-001
POWER CONTROL UNIT-RUDDER LOWER UV006	27-20-15-01	-002
POWER CONTROL UNIT-ELEVATOR LH INBD UH001	27-33-00-01	-167
POWER CONTROL UNIT-ELEVATOR RH INBD UH002	27-33-00-01	-168
POWER CONTROL UNIT-ELEVATOR LH OUTBD UH003	27-33-00-01	-169
POWER CONTROL UNIT-ELEVATOR RH OUTBD UH004	27-33-00-01	-170
POWER CONTROL UNIT-SPEED BRAKE INBD	27-60-40-01	-001
POWER CONTROL UNIT-SPEED BRAKE CTR	27-60-40-01	-002
POWER CONTROL UNIT-SPEED BRAKE OTBD	27-60-40-01	-003
POWER CONTROL UNIT - ALTERNATING CURRENT	24-20-10-01	-
POWER CONTROL UNIT MONITER SYSTEM	27-00-01-01	-
POWER CONTROL UNIT-SPOILER INBOARD	27-13-35-01	-001
POWER CONTROL UNIT-SPOILER OUTBOARD	27-13-35-01	-002
POWER DRIVE UNIT ASSY MY033	27-50-00-01	-001
POWER PLANT	71-00-00-01	-
POWER TRANSFER UNIT-HYDRAULIC	29-21-00-01	-001
PRESSURE SWITCH-LH FUEL ST011	28-20-40-01	-001
PRESSURE SWITCH-RH FUEL ST012	28-20-40-01	-002
PRESSURE SWITCH-LH FUEL SL019	28-20-45-01	-001
PRESSURE SWITCH-LH BLEED AIR ST009 ANTI-ICE BLEED AIR SUPPLY-AFT FAIRING	30-10-00-01	-011
PRESSURE SWITCH-RH BLEED AIR ST010 ANTI-ICE BLEED AIR SUPPLY-AFT FAIRING	30-10-00-01	-012
PRESSURE SWITCH-ENTRANCE DOOR SEALS	52-11-00-01	-018
PRESSURE TRANSDUCER-HYDRAULIC UT028	29-30-00-01	-003
PRESSURE TRANSDUCER-HYDRAULIC UY005	29-30-00-01	-008
PRESSURE TRANSDUCER-HYDRAULIC UT040	29-30-00-01	-013
PRESSURE TRANSDUCER UT038 FSO PX9310-1	80-10-00-01	-178
PRESSURE TRANSDUCER UT038	80-10-00-01	-178A
PRESSURIZATION CONTROL SYSTEM	21-30-00-01	-
PRIMARY EJECTOR-FUEL PUMP	28-20-20-01	-016
PRIMARY FLIGHT DISPLAY-LH GDU-1400W DISPLAY UNIT FSO S3100-611 UI401	34-60-00-01	-001
PRIMARY FLIGHT DISPLAY-LH GDU-1400W DISPLAY UNIT UI401	34-60-00-01	-001A
PRIMARY FLIGHT DISPLAY-RH GDU-1400W DISPLAY UNIT FSO S3100-611 UI402	34-60-00-01	-003
PRIMARY FLIGHT DISPLAY-RH GDU-1400W DISPLAY UNIT UI402	34-60-00-01	-003A
PRIMARY FLIGHT DISPLAY CONTROLLER-LH GCU 275 UI409	34-60-00-01	-004
PRIMARY FLIGHT DISPLAY CONTROLLER-RH GCU 275 UI408	34-60-00-01	-005
PROBES-OIL PRESSURE & TEMPERATURE	79-30-00-01	-002
PROXIMITY SWITCH SY109	27-10-50-01	-339
PROXIMITY SWITCH SF016	27-11-00-01	-022
PROXIMITY SWITCH-DOOR WARNING SC005	52-70-00-01	-008
PROXIMITY SWITCH SC024	52-70-00-01	-010
PULLEY ASSY	52-10-35-01	-083
PULSATION DAMPENER	29-10-10-01	-161
PUMP & MOTOR ASSY-RUDDER STANDBY MT002	29-23-00-01	-082
PUMP RECEIVER-ELECTRIC FUEL BOOST	28-20-05-01	-007
PUSHROD ASSY-BLEED AIR INLET/EXHAUST LH & RH FSO 6714383-163	36-10-20-02	-098
PUSHROD ASSY-BLEED AIR INLET/EXHAUST LH & RH	36-10-20-02	-098A
PYLON ACCESS DOORS	52-40-47-01	-
PYLON DEPLOYMENT TUBES AND NOZZLE	26-20-30-01	-
PYLON DRAG ANGLE	53-60-04-01	-
PYLON MAIN FRAME	54-50-00-01	-
PYLON PANELS AND SKIN	54-60-00-01	-
PYLON WORK LIGHT	33-40-55-01	-

Q

NOMENCLATURE	CH SEC SUBJ FIG	ITEM
QAD - MOUNTING PAD	24-20-00-01	-003

© Cessna Aircraft Company

NOMENCLATURE	CH SEC SUBJ FIG	ITEM
Q Continued		
QAD MOUNT KIT-DC GENERATOR	24-30-00-01	-004
QAD MOUNT-APU GENERATOR	24-35-00-01	-002
QUICK ACCESS RECORDER UF317	31-37-00-01	-001
QUICK ACCESS RECORDER	31-37-00-01	-
R		
RADIO ALTIMETER ANTENNA-LH AND RH	34-40-00-01	-015
RADIO ALTIMETER ANTENNA ALT FOR S67-2002-4	34-40-00-01	-016
RAIL ASSY - LH	32-70-00-01	-001
RAIL ASSY - RH	32-70-00-01	-002
RAIN GUTTER	52-30-00-01	-041
RAM AIR TEMPERATURE (RAT) HEAT CURRENT SENSOR	34-10-25-01	-
RAM AIR TEMPERATURE (RAT) PROBE	34-10-20-01	-
RAM AIR/FRESH AIR DISTRIBUTION	21-27-00-01	-
RECORDER POWER SUPPLY UK302	23-70-00-01	-010
REEL ASSY-AFT	52-10-35-01	-001
REEL ASSY-FWD	52-10-35-01	-009
REFRIGERATION PACKAGE-AFT ST001	21-50-00-01	-001
REFRIGERATION PACKAGE-FWD ST006	21-50-00-01	-002
REFUELING DOOR GROUNDING RECEPTACLE	28-11-50-01	-
RELIEF VALVE	29-10-07-01	-004
RELIEF VALVE	73-10-00-01	-032
REMOTE MOUNT RACK	31-40-05-01	-002
REMOTE MOUNT RACK	31-40-05-01	-008
REMOTE MOUNT RACK	34-59-00-01	-002
RESERVOIR ASSY-LH UT031	29-10-05-01	-001
RESERVOIR ASSY-RH UT030	29-10-05-01	-002
RESISTANCE THERMOMETER-LH ANTI-ICE TT021	30-20-00-01	-006
RESISTANCE THERMOMETER-RH ANTI-ICE TT018	30-20-00-01	-007
RESISTANCE THERMOMETER-LH ANTI-ICE TT019	30-20-00-01	-010
RESISTANCE THERMOMETER-RH ANTI-ICE TT020	30-20-00-01	-011
RESISTOR-LANDING LIGHT LH RY005	33-40-35-02	-027
RESISTOR-LANDING LIGHT RH RY006	33-40-35-02	-028
RH POWER JUNCTION BOX	24-60-10-02	-
RIGHT FORWARD PEDESTAL SWITCH PANEL	31-10-25-01	-
RIGHT SWITCH PANEL	31-10-15-01	-
ROLL POSITION SENSOR INSTALLATION - FLIGHT DATA RECORDER (FDR)	27-11-20-01	-
ROLL SPOILER ASSY-#1-LH INBD	57-70-00-01	-089
ROLL SPOILER ASSY-#10-RH INBD	57-70-00-01	-090
ROLL SPOILER ASSY-#2-LH INBD	57-70-00-01	-075
ROLL SPOILER ASSY-#9-RH INBD	57-70-00-01	-076
ROTOR SUPPORT ASSY	32-35-00-01	-083
RTD SENSOR-LH TL007	30-10-30-01	-078
RTD SENSOR ASSY-FWD ECU TT011	21-50-00-01	-016
RTD SENSOR ASSY-LH TL029	30-10-30-01	-075
RTD SENSOR ASSY-LH TH003	30-13-10-01	-088
RTD SENSOR ASSY-RH TH004	30-13-10-01	-089
RTD SENSOR ASSY-LH TH001	30-13-10-01	-090
RTD SENSOR ASSY-RH TH002	30-13-10-01	-091
RTD SENSOR ASSY-LH TH005	30-13-10-01	-096
RTD SENSOR ASSY-RH TH006	30-13-10-01	-097
RTD TEMP SENSOR TT009	29-10-00-01	-081
RTD TEMP SENSOR TT010	29-10-00-02	-009
RTD TEMPERATURE SENSOR-LH TL031	30-10-30-01	-081
RUDDER	55-40-00-01	-
RUDDER ASSY-LWR FSO 6730000-204	55-40-00-01	-075
RUDDER CONTROL CABLES - AFT	27-20-05-02	-

© Cessna Aircraft Company

NOMENCLATURE	CH SEC SUBJ FIG	ITEM
R Continued		
RUDDER CONTROL CABLES - FORWARD	27-20-05-01	-
RUDDER CONTROL SYSTEM	27-20-00-01	-
RUDDER FAIRING ASSY	53-30-02-03	-001
RUDDER PEDAL-LH PILOT	27-25-00-01	-099
RUDDER PEDAL-RH PILOT	27-25-00-01	-172
RUDDER PEDAL-LH COPILOT	27-25-00-01	-243
RUDDER PEDAL-RH COPILOT	27-25-00-01	-300
RUDDER PEDAL INSTALLATION WITH FLIGHT DATA RECORDER (FDR)	27-25-00-02	-
RUDDER PEDAL POSITION SENSOR	27-24-15-01	-
RUDDER PEDALS	27-25-00-01	-
RUDDER POSITION SENSOR UC301	27-24-15-01	-002
RUDDER POSITION SENSOR UC302	27-24-15-01	-003
RUDDER POSITION SENSOR INSTALLATION	55-40-00-02	-
RUDDER POWER CONTROL UNIT	27-20-15-01	-
RUDDER RESERVOIR ASSY-FSO 6707013-1	29-23-00-01	-244
RUDDER RESERVOIR ASSY	29-23-00-01	-244A
RUDDER SECTOR ASSY	27-20-00-01	-001
RUDDER TRAVEL LIMITERS	27-21-00-01	-
RUDDER TRIM SYSTEM	27-26-00-01	-
RVDT 3B1225B 6" LEAD-UC042	27-11-20-01	-004
RVDT 3B1225B 6" LEAD-UF042	27-11-20-01	-022
RVDT POSITION SENSOR-U0005	27-35-00-02	-007B
RVSM-AIR DATA COMPUTER-LH UN301	34-10-05-01	-001
RVSM-AIR DATA COMPUTER-RH UN302	34-10-05-01	-002
S		
S-BAND STUB ANTENNA-MAINTENANCE YN400	31-32-10-01	-001
S-BAND STUB ANTENNA	31-32-10-01	-
SATCOM ANTENNA YV501 ALAT FOR 405006A-PMA	23-15-00-01	-087
SATELLITE COMMUNICATION SYSTEM	23-15-00-01	-
SATELLITE TRANSCEIVER (AXXESS) UK557	23-15-00-01	-001
SCAVENGE EJECTOR-FUEL PUMP	28-20-20-01	-012
SCISSOR FITTING ASSY-HORIZONTAL STABILIZER	55-10-00-01	-102
SCOOP ASSY-CENTER TANK LH VENT	28-11-20-01	-101
SCOOP ASSY-CENTER TANK RH VENT	28-11-20-01	-102
SCOOP-RAM AIR	21-27-00-01	-007
SCREEN-APU GENERATOR	24-35-00-01	-011
SCREEN-APU AIR INLET DUCT	49-10-15-01	-012
SCREEN ASSY-LH FUEL EJECTOR	28-20-70-01	-008
SCREEN ASSY-RH FUEL EJECTOR	28-20-70-01	-009
SCREEN-HOPPER FUEL	28-20-70-01	-015
SCREEN-HOPPER FUEL FLAPPER CHECK VALVE	28-11-40-01	-005
SCREEN-HOPPER FUEL FLAPPER CHECK VALVE	28-11-40-01	-009
SCREWDRIVER	25-25-00-01	-001
SCUPPER	24-35-00-01	-010
SEAL-FUEL PRESSURE RELIEF VALVE	28-11-20-01	-165
SEAL	52-30-35-01	-001
SEAL-NOSE ACCESS DOOR LOWER	52-40-37-01	-032
SEAL-NOSE ACCESS DOOR UPPER	52-40-37-01	-033
SEAL-LWR	52-40-37-01	-181
SEAL-UPR	52-40-37-01	-182
SEAL	53-10-05-01	-001
SEAL-PASSENGER WINDOW	56-20-00-01	-010
SEAL-INBD FLAP	57-51-00-02	-009
SEAL-AILERON PANEL INBD	57-60-00-01	-108
SEAL-AILERON PANEL CTR	57-60-00-01	-110
SEAL LH	56-15-00-01	-098

© Cessna Aircraft Company

NOMENCLATURE	CH SEC SUBJ FIG	ITEM
S Continued		
SEAL RH	56-15-00-01	-099
SEALS - MAIN LANDING GEAR DOOR	57-12-00-01	-
SEAT BEAM - LH OUTBOARD	53-30-06-03	-
SECONDARY FLIGHT DISPLAY-GH-3900 UI304	34-15-05-01	-001
SECTOR ASSY-AILERON	27-10-15-01	-087
SECTOR ASSY-AILERON ALT FOR 6760776-1	27-10-15-01	-087A
SECTOR ASSY-LH AILERON	27-10-30-01	-450
SECTOR ASSY-RH AILERON	27-10-30-01	-451
SECTOR ASSY	32-35-00-01	-075
SENSOR-STABILIZER TRIM POSITION UV001	27-40-00-01	-150
SENSOR-LH POSITION SLAT STOW SL101	27-80-25-01	-001
SENSOR-RH POSITION SLAT STOW SR101	27-80-25-01	-002
SENSOR-LH POSITION SLAT DEPLOY SL102	27-80-25-01	-003
SENSOR-RH POSITION SLAT DEPLOY SR102	27-80-25-01	-004
SENSOR-HIGH PRESSURE BLEED AIR LH TEMPERATURE TT007	36-10-20-02	-089
SENSOR-HIGH PRESSURE BLEED AIR RH TEMPERATURE TT008	36-10-20-02	-090
SENSOR ASSY-LH ENGINE AIR INLET ANTI-ICE TD003	30-20-00-02	-036
SENSOR ASSY-RH ENGINE AIR INLET ANTI-ICE TE002	30-20-00-02	-037
SENSOR MANIFOLD ASSY-AUXILARY HYDRAULIC FSO 6717278-1	29-20-05-01	-014
SENSOR MANIFOLD ASSY-AUXILARY HYDRAULIC	29-20-05-01	-014A
SERVICE AIR SYSTEM-PRESSURE REGULATOR VALVES TO CABIN PRESSURE CONTROL	37-10-00-01	-090
SERVICE AIR SYSTEM - BAGGAGE	36-15-00-02	-
SERVICE AIR SYSTEM - CABIN	36-15-00-01	-
SERVICE AIR SYSTEM - TAILCONE	36-15-00-03	-
SERVO ACTUATOR	22-10-10-02	-001
SERVO GEARBOX	22-10-10-02	-002
SHROUD ASSY-LH	30-40-00-01A	-026
SHROUD ASSY-RH	30-40-00-01A	-027
SHROUD ASSY LH	30-40-00-01	-017
SHROUD ASSY RH	30-40-00-01	-018
SHROUD FAN	21-29-00-01	-010
SHUTOFF VALVE-LH VL001	30-10-20-01	-018
SHUTOFF VALVE-RH VR002	30-10-20-01	-019
SIDE CONSOLE INSTALLATION - COCKPIT	53-20-06-01	-
SIDE SKIN BOND ASSEMBLY - COCKPIT	53-20-01-02	-
SIDERAIL ASSY-FWD LWR	25-50-15-01	-079
SIDERAIL ASSY-AFT LWR	25-50-15-01	-080
SIGHT GLASS-TAILCONE BAGGAGE COMPARTMENT	52-30-00-01	-039
SIGHT GLASS ASSY-TAILCONE BAGGAGE COMPARTMENT	52-30-00-01	-035
SIGNAL PROCESSOR-FUEL QUANTITY	28-40-10-01	-001
SINGLE POINT REFUEL RECEPTACLE STRUCTURE	53-43-00-01	-
SINGLE POINT REFUELING DOOR	52-40-07-01	-
SINGLE-POINT REFUELING PANEL LIGHT ASSEMBLY	33-30-30-01	-
SINGLE-POINT REFUELING/DEFEUELING SYSTEM - OUTER WING	28-21-00-03	-
SINGLE-POINT REFUELING/DEFUELING SYSTEM - CENTER WING	28-21-00-02	-
SINGLE-POINT REFUELING/DEFUELING SYSTEM - FORWARD FAIRING	28-21-00-01	-
SKI COMPARTMENT	53-30-03-04	-
SKID PLATE ASSY	32-70-00-01	-010
SKID RAIL ASSEMBLY	32-70-00-01	-
SKIN AND STRINGER INSTALLATION - COCKPIT	53-20-01-01	-
SKIN ASSEMBLY - FORWARD CABIN	53-20-01-03	-
SKIN BOND ASSY-LH AFT	53-24-00-01	-001
SKIN BOND ASSY-RH AFT	53-24-00-01	-002
SKIN PANEL ASSY-UPR LH	57-20-00-01	-001
SKIN PANEL ASSY-UPR RH	57-20-00-01	-002
SKINS - PASSENGER COMPARTMENT	53-30-01-01	-
SLAT ACTUATING COMPONENTS	27-80-10-01	-
SLAT ASSY	27-80-10-01	-001
SLAT CONTROL VALVE VY025	27-80-05-01	-001
SLAT CONTROL VALVE	27-80-05-01	-

© Cessna Aircraft Company

S Continued

NOMENCLATURE	CH SEC SUBJ FIG	ITEM
SLAT POSITION SENSOR	27-80-25-01	-
SLAT SYSTEM - FUSELAGE/CENTER WING	27-80-00-01	-
SLAT SYSTEM - INBOARD WING	27-80-00-02	-
SLAT SYSTEM - OUTBOARD WING	27-80-00-03	-
SLATS - WING LEADING EDGE	57-40-10-01	-
SMOKE DETECTOR-BAGGAGE COMPARTMENT FIRE UK008	26-13-00-01	-001
SOLENOID-ENTRANCE DOOR WC003	52-70-00-01	-011
SPACER PLATE	53-50-00-01	-178
SPAR ASSY-MAIN LH	57-20-00-07	-001
SPAR ASSY-MAIN RH	57-20-00-07	-002
SPARE ESCAPE HATCH ASSY	52-20-00-01	-010
SPEED BRAKE ASSY - #3 LH OUTBD	57-70-00-01	-026
SPEED BRAKE ASSY - #4 LH CTR	57-70-00-01	-013
SPEED BRAKE ASSY - #5 LH INBD	57-70-00-01	-001
SPEED BRAKE ASSY - #6 RH INBD	57-70-00-01	-002
SPEED BRAKE ASSY - #7 RH CTR	57-70-00-01	-014
SPEED BRAKE ASSY - #8 RH OUTBD	57-70-00-01	-027
SPEED BRAKE CONTROL CABLES - FUSELAGE	27-60-20-01	-
SPEED BRAKE CONTROL CABLES - WING	27-60-30-01	-
SPEED BRAKE CONTROL SYSTEM	27-60-00-01	-
SPEED BRAKE POSITION SENSOR	27-63-05-01	-
SPEED BRAKE POWER CONTROL UNIT (PCU)	27-60-40-01	-
SPOILER CONTROL CABLES - FUSELAGE	27-13-00-01	-
SPOILER CONTROL CABLES - WING	27-13-05-01	-
SPOILER MIXER ASSEMBLY	27-12-00-01	-
SPOILER POWER CONTROL UNIT (PCU)	27-13-35-01	-
SPOILER SUPPORT INSTALLATION	57-70-00-02	-
SPOILERS/SPEEDBRAKES	57-70-00-01	-
SPROCKET ASSY-AILERON	27-10-30-01	-387
STALL WARNING STICK SHAKER	27-37-00-01	-
STALL WARNING/AOA TRANSMITTER (SWAAT) LH UC003	34-25-00-01	-001
STALL WARNING/AOA TRANSMITTER (SWAAT) RH UF003	34-25-00-01	-002
STANDBY BATTERY UN903	34-15-05-01	-075
STATIC DISCHARGING	23-60-00-01	-
STATIC SYSTEM	34-10-00-02	-
STATIC WICK	23-60-00-01	-002
STEP LIGHT ASSY	52-10-31-01	-027
STINGER ACCESS DOOR	52-40-33-01	-
STINGER ASSEMBLY-TAILCONE	53-30-02-03	-077
STOP BLOCK STOP BLOCK	55-40-00-01	-089
STOWAGE BOX-LARGE LH JC501	35-10-10-01	-001
STOWAGE BOX-LARGE RH JF502	35-10-10-01	-002
STRAINER ASSY-FUEL	28-20-70-01	-004
STRAP ASSY	25-10-01-02	-003
STRUCTURE-ENTRANCE DOOR	52-10-00-01	-150
SURGE TANK ASSY-RH CENTER WING TANK	28-11-20-01	-028
SWITCH-FWD ECU TEMPERATURE CONTROL ST006	21-50-00-01	-005
SWITCH-AFT ECU TEMPERATURE CONTROL ST001	21-50-00-01	-007
SWITCH-UPPER YD/A/B SI032	27-00-01-01	-001
SWITCH-AILERON OFF SI033	27-00-01-01	-005
SWITCH-RUDDER OFF SI034	27-00-01-01	-006
SWITCH-LH ELEV OFF SI035	27-00-01-01	-007
SWITCH-RH ELEV OFF SI035	27-00-01-01	-008
SWITCH-AILERON TRIM SI072	27-10-50-01	-346
SWITCH-SECONDARY TRIM NOSE DOWN/NOSE UP SI031	27-40-00-01	-156
SWITCH-FLAP RESET SI042	27-50-00-02	-010
SWITCH-HYDRAULIC PRESSURE ST016	29-30-00-01	-001
SWITCH-HYDRAULIC PRESSURE ST027	29-30-00-01	-011
SWITCH-MASTER WARNING RESET LH SI115	31-51-00-01	-001
SWITCH-MASTER WARNING RESET RH SI116	31-51-00-01	-002

© Cessna Aircraft Company

S Continued

NOMENCLATURE	CH SEC SUBJ FIG	ITEM
SWITCH-MASTER WARNING RESET LH SI114	31-51-00-01	-003
SWITCH-MASTER WARNING RESET RH SI117	31-51-00-01	-004
SWITCH ACCUMULATOR BLEED SN002	32-51-05-01	-032
SWITCH ST008	33-30-10-01	-006
SWITCH ST005	33-30-10-01	-008
SWITCH SR001	33-30-30-01	-004
SWITCH-HIGH PRESSURE BLEED AIR LH TEMPERATURE ST023	36-10-20-02	-092
SWITCH-HIGH PRESSURE BLEED AIR RH TEMPERATURE ST024	36-10-20-02	-093
SWITCH-TAILCONE BAGGAGE DOOR SK007	52-70-50-01	-001
SWITCH-TAILCONE BAGGAGE DOOR SK002	52-70-50-01	-002
SWITCH-TOILET SERVICE DOOR ST007	52-70-50-01	-006
SWITCH-LH AND RH NOSE ACCESS DOOR WARNING SN001	52-70-50-01	-008
SWITCH-FUEL ACCESS DOOR SR002	52-70-60-01	-002
SWITCH-HYDRAULIC PRESSURE ST025	78-30-10-01	-002
SWITCH-HYDRAULIC PRESSURE ST026	78-30-10-02	-077
SWITCH - (EMER STOW)-L T/R SI052	78-30-15-01	-002
SWITCH - (EMER STOW)-R T/R SI055	78-30-15-01	-003
SWITCH - (ENG FIRE R) SI112	26-20-05-01	-008
SWITCH - (L ENG FIRE) SI110	26-20-05-01	-007
SWITCH - (ON/OFF) SI058	49-40-00-01	-002
SWITCH - (ON/OFF) SI059	49-40-00-01	-003
SWITCH - (RESET)-LH SI053	76-12-05-01	-002
SWITCH - (RESET)-RH SI054	76-12-05-01	-003
SWITCH - (RUN/STOP)-LH SI047	76-12-05-01	-007
SWITCH - (RUN/STOP)-RH SI051	76-12-05-01	-008
SWITCH - BOTTLE 2 ARMED SI113	26-20-05-01	-010
SWITCH - BOTTLE ARMED SI111	26-20-05-01	-009
SWITCH ASSY-DOOR WARNING UPPER FWD SC002	52-70-00-01	-001
SWITCH ASSY-DOOR WARNING LOWER FWD SC001	52-70-00-01	-002
SWITCH ASSY-DOOR WARNING LOWER AFT SC003	52-70-00-01	-003
SWITCH ASSY-DOOR WARNING UPPER AFT SC004	52-70-00-01	-004
SWITCH ASSY-TAILCONE BAGGAGE DOOR SK009	52-70-50-01	-003
SWITCH PANEL-COCKPIT OVERHEAD	33-10-35-01	-001
SWITCH PANEL LIGHT EMITTING DIODE (LED) PANEL	33-10-10-01	-

T

NOMENCLATURE	CH SEC SUBJ FIG	ITEM
TAIL FLOODLIGHT	33-40-45-01	-
TAIL LOGO LIGHT - LH FD003	33-40-45-01	-001
TAIL LOGO LIGHT - RH FE003	33-40-45-01	-002
TAIL NAVIGATION ANTICOLLISION LIGHT FV010	33-40-10-01	-001
TAIL NAVIGATION ANTICOLLISION LIGHT AND FLASHER INSTALLATION	33-40-10-01	-
TAILCONE ASSEMBLY	53-60-01-13	-
TAILCONE ASSY-FWD FSO 6712521-3	53-60-01-13	-002
TAILCONE ASSY-FWD	53-60-01-13	-002A
TAILCONE CANTED FRAME	53-60-01-12	-
TAILCONE DRAIN TRAY	53-30-02-01	-
TAILCONE FAIRING AND SUPPORT EXTERNAL FRAMES - FS 468.00	53-60-00-01	-
TAILCONE FAIRING AND SUPPORT EXTERNAL FRAMES - FS 489.50	53-60-00-02	-
TAILCONE FAIRING AND SUPPORT EXTERNAL FRAMES - FS 500.25 AND FS 511.00	53-60-00-03	-
TAILCONE FAIRING AND SUPPORT EXTERNAL FRAMES - FS 526.22	53-60-00-04	-
TAILCONE FAIRING AND SUPPORT EXTERNAL FRAMES - FS 541.75 AND FS 555.00	53-60-00-05	-
TAILCONE FAIRING AND SUPPORT EXTERNAL FRAMES - FS 568.25, FS 583.06 AND FS 599.25	53-60-00-06	-
TAILCONE FRAME - FS 457.25	53-60-01-01	-
TAILCONE FRAME - FS 468.00	53-60-01-02	-
TAILCONE FRAME - FS 478.75	53-60-01-03	-
TAILCONE FRAME - FS 489.50	53-60-01-04	-

© Cessna Aircraft Company

T Continued

NOMENCLATURE	CH SEC SUBJ FIG	ITEM
TAILCONE FRAME - FS 500.25	53-60-01-05	-
TAILCONE FRAME - FS 511.00	53-60-01-06	-
TAILCONE FRAMES - FS 541.75 TO FS 599.25	53-60-01-09	-
TAILCONE FRAMES - FS 614.65 TO FS 657.10	53-60-01-11	-
TAILCONE INSPECTION LIGHT	33-30-10-01	-
TAILCONE JACK STAND DOOR	52-40-25-01	-
TAILCONE LONGERON - STRINGER 3	53-60-03-01	-
TAILCONE LONGERON - STRINGER 8	53-60-03-02	-
TAILCONE MAINTENANCE ACCESS DOOR	52-40-01-01	-
TAILCONE MATE - FS 530.85	53-60-01-08	-
TAILCONE STINGER	53-30-02-03	-
TAILCONE STRINGER SPLICES	53-60-00-07	-
TANK ASSY-FWD FAIRING FUEL	28-11-55-01	-001
TAXI LIGHTS	33-40-35-01	-
TCAS ANTENNA-UPR YF800	34-47-00-01	-007
TCAS ANTENNA-LWR YY806	34-47-00-01	-019
TEMP SENSOR ASSY-CABIN UC029	21-60-00-01	-158
TEMP SENSOR ASSY-COCKPIT UF013	21-60-00-01	-159
TEMP SENSOR COVER-CABIN AND COCKPIT	21-60-00-01	-153
TEMPERATURE CNTROL VALVE VT041	21-60-00-01	-075
TEMPERATURE CONTROL SYSTEM	21-60-00-01	-
TEMPERATURE SENSOR ASSY-LH TC300	34-10-20-01	-001
TEMPERATURE SENSOR ASSY-RH TF300	34-10-20-01	-002
TEST CONNECTOR PORT INSTALLATION	45-45-00-01	-
THRANE & THRANE SWIFT BROADBAND UNIT UK503	23-15-00-01	-010
THROTTLE QUADRANT	76-10-00-01	-
THRUST REVERSER	78-30-00-01	-
THRUST REVERSER ASSY-LH	78-30-00-01	-001
THRUST REVERSER ASSY-RH	78-30-00-01	-002
THRUST REVERSER EMERGENCY STOW SWITCH/LIGHT	78-30-15-01	-
THRUST REVERSER HYDRAULIC SYSTEM - LH	78-30-10-01	-
THUMBWHEEL SWITCH ASSY S0001	34-25-00-01	-022
TIRE-NOSE LANDING GEAR	32-41-05-01	-005
TIRE-26X6.6R14 MAIN LANDING GEAR	32-41-20-01	-004
TOILET ASSY-EXTERNALLY SERVICEABLE FLUSH	38-30-00-01	-001
TOILET SERVICE DOOR	52-40-15-01	-
TOILET SERVICE INDICATING LIGHTS	38-30-00-02	-
TOOL-COWLING LATCH	25-25-00-01	-008
TOOL-INNER ECCENTRIC BAGGAGE DOOR	25-25-00-01	-012
TOOL-INNER ECCENTRIC CABIN DOOR	25-25-00-01	-011
TOOL-OUTER ECCENTRIC	25-25-00-01	-013
TORQUE BOX ASSEMBLY - INSTRUMENT PANEL INSTALLATION	53-20-03-03	-
TORQUE TUBE AILERON-USE WITH 6760776-1	27-10-15-01	-092
TORQUE TUBE AILERON-USE WITH 6760776-5	27-10-15-01	-092A
TRAILING EDGE RIBS INSTALLATION - INBOARD FLAP	57-20-01-21	-
TRANSDUCER-PRESSURE	27-20-15-01	-013
TRANSFER EJECTOR-FUEL PUMP	28-20-20-01	-001
TRANSFORMER RECTIFIER UNIT-LH UN901	24-30-55-01	-001
TRANSFORMER RECTIFIER UNIT-LH ALT FOR TRU1-125-1 UN901	24-30-55-01	-002
TRANSFORMER RECTIFIER UNIT-RH UN902	24-30-55-01	-003
TRANSFORMER RECTIFIER UNIT-RH ALT FOR TRU1-125-1 UN902	24-30-55-01	-004
TRANSFORMER RECTIFIER UNIT (TRU)	24-30-55-01	-
TRANSFORMER-CURRENT TORROID LH ENGINE LD001	24-30-00-01	-022
TRANSFORMER-CURRENT TORROID RH ENGINE LE002	24-30-00-01	-023
TRAY	23-15-00-01	-011
TRAY	23-70-00-01	-008
TRAY ASSY	34-15-05-01	-076
TRUNNION ASSY-LH MLG	32-10-00-01	-101
TRUNNION ASSY-LH MLG	32-10-00-01	-101A
TRUNNION ASSY-RH MLG	32-10-00-01	-102

© Cessna Aircraft Company

T Continued

NOMENCLATURE	CH SEC SUBJ FIG	ITEM
TRUNNION ASSY-RH MLG	32-10-00-01	-102A
TRUSS MOUNT ASSY-AUXILIARY POWER UNIT	49-10-00-01	-016
TUBE ASSY-VACUUM REGULATOR	21-33-00-01	-035
TUBE ASSY-APU SURGE	49-10-00-01	-023
TUBE ASSY-DISCRIMINATOR	28-11-10-01	-158
TUNING WEIGHT-ELEVATOR	55-20-00-01	-097
TUNING WEIGHT-UPR RUDDER BALANCE	55-40-00-01	-097
TUNING WEIGHT-UPR RUDDER BALANCE	55-40-00-01	-098

U

NOMENCLATURE	CH SEC SUBJ FIG	ITEM
U.S. EXTERIOR PLACARDS AND MARKINGS - AFT BAGGAGE	11-N-23-01	-
U.S. EXTERIOR PLACARDS AND MARKINGS - EMERGENCY EXIT DOOR	11-N-28-02	-
U.S. EXTERIOR PLACARDS AND MARKINGS - EMPENNAGE	11-N-23-02	-
U.S. EXTERIOR PLACARDS AND MARKINGS - EMPENNAGE HYDRAULIC SYSTEM	11-N-26-03	-
U.S. EXTERIOR PLACARDS AND MARKINGS - ENTRANCE DOOR	11-N-28-01	-
U.S. EXTERIOR PLACARDS AND MARKINGS - ENTRANCE DOOR STEPS	11-N-28-03	-
U.S. EXTERIOR PLACARDS AND MARKINGS - FUSELAGE	11-N-22-02	-
U.S. EXTERIOR PLACARDS AND MARKINGS - FUSELAGE HYDRAULIC SYSTEM	11-N-26-02	-
U.S. EXTERIOR PLACARDS AND MARKINGS - MAIN LANDING GEAR	11-N-27-02	-
U.S. EXTERIOR PLACARDS AND MARKINGS - MAIN POWER JUNCTION BOX	11-N-24-02	-
U.S. EXTERIOR PLACARDS AND MARKINGS - NACELLES AND PYLONS	11-N-24-01	-
U.S. EXTERIOR PLACARDS AND MARKINGS - NOSE	11-N-22-01	-
U.S. EXTERIOR PLACARDS AND MARKINGS - NOSE HYDRAULIC SYSTEM	11-N-26-01	-
U.S. EXTERIOR PLACARDS AND MARKINGS - NOSE LANDING GEAR	11-N-27-01	-
U.S. EXTERIOR PLACARDS AND MARKINGS - OXYGEN	11-N-22-03	-
U.S. EXTERIOR PLACARDS AND MARKINGS - PYLONS HYDRAULIC SYSTEM	11-N-26-04	-
U.S. EXTERIOR PLACARDS AND MARKINGS - WINGS	11-N-25-01	-
U.S. EXTERIOR PLACARDS AND MARKINGS - WINGS HYDRAULIC SYSTEM	11-N-26-05	-
U.S. EXTERIOR PLACARDS AND MARKINGS -FUEL	11-N-25-02	-
U.S. INTERIOR PLACARDS AND MARKINGS-AFT CLOSET	11-N-33-03	-
UNION-JET RESTRICTOR	29-23-00-01	-321
UNLOADING RELIEF VALVE-HYDRAULIC LH VT031	29-10-07-01	-001
UNLOADING RELIEF VALVE-HYDRAULIC RH VT030	29-10-07-01	-002
UPHOLSTERY - BAGGAGE DOOR	25-50-12-01	-
UPLOCK ACTUATOR ASSY-LH FSO 6747005-1	32-31-25-01	-001
UPLOCK ACTUATOR ASSY-LH	32-31-25-01	-001A
UPLOCK ACTUATOR ASSY-RH FSO 6747005-2	32-31-25-01	-002
UPLOCK ACTUATOR ASSY-RH	32-31-25-01	-002A
UPPER AFT CABIN INTERCOSTAL	53-23-00-01	-
UPPER COCKPIT STRUCTURE ASSEMBLY	53-20-02-01	-
UPPER LINK ASSY-STABILIZER SCISSOR	55-10-00-01	-005
UPPER PANEL SUPPORT ASSEMBLY - INSTRUMENT PANEL INSTALLATION	53-20-03-02	-
UPPER RUDDER ACUATOR	27-24-05-01	-
UPPER RUDDER ASSY	55-40-00-01	-001
UPPER RUDDER POSITION SENSOR	27-24-10-01	-
UPPER SKIN BOND ASSEMBLY - COCKPIT	53-20-02-02	-

V

NOMENCLATURE	CH SEC SUBJ FIG	ITEM
VACUUM DISTRIBUTION	37-10-00-01	-
VACUUM REGULATOR-PRESSURIZATION	21-31-00-01	-006
VALVE-FUEL MANIFOLD CHECK ALT FOR 7F2-W120005	28-20-00-03	-083
VALVE-DEFUEL	28-21-00-02	-075
VALVE-PRESSURE REGULATOR SHUTOFF VT008	30-10-00-01	-003
VALVE-PRESSURE REGULATOR SHUTOFF VT009	30-10-00-01	-004
VALVE-CHECK	30-10-00-01	-082

© Cessna Aircraft Company

V Continued

NOMENCLATURE	CH SEC SUBJ FIG	ITEM
VALVE-LH REGULATING SHUTOFF BLEED AIR PRESSURE VT033	30-13-00-01	-001
VALVE-RH REGULATING SHUTOFF BLEED AIR PRESSURE VT022	30-13-00-01	-002
VALVE-SHUTTLE MAIN LANDING GEAR	32-30-00-02	-150
VALVE-SHUTTLE NOSE LANDING GEAR	32-30-00-03	-012
VALVE-PARKING BRAKE	32-45-00-01	-007
VALVE-NOSE WHEEL STEERING ISOLATION VALVE VY009	32-50-25-01	-001
VALVE-NOSE WHEEL STEERING ISOLATION VALVE VY009	32-51-25-01	-001
VALVE-ENGINE HIGH PRESSURE BLEED AIR LH SHUTOFF VD005	36-10-20-02	-021
VALVE-ENGINE HIGH PRESSURE BLEED AIR RH SHUTOFF VE006	36-10-20-02	-022
VALVE-HIGH PRESSURE BLEED AIR REGULATING	36-10-20-02	-094
VALVE-CHECK	36-10-20-04	-075
VALVE-SHUTOFF LH VT029	36-10-20-04	-080
VALVE-SHUTOFF RH VT028	36-10-20-04	-081
VALVE-LOW PRESSURE REGULATING SHUTOFF LH	36-10-20-04	-084
VALVE-LOW PRESSURE REGULATING SHUTOFF RH	36-10-20-04	-085
VALVE-BLEED AIR CHECK	36-13-00-01	-003
VALVE-APU SHUTOFF LT006	36-13-00-01	-008
VALVE ASSY-AIR CYCLE MACHINE SHUTOFF VT023	21-21-00-01	-024
VALVE ASSY-FUEL PRESSURE RELIEF	28-11-20-01	-175
VALVE ASSY-SINGLE POINT REFUELING/DEFUELING CHECK FSO 9036-301-1	28-21-00-01	-001
VALVE ASSY-SINGLE POINT REFUELING/DEFUELING CHECK	28-21-00-01	-001A
VALVE ASSY-LH SHUTOFF VD003	36-10-20-04	-014
VALVE ASSY-RH SHUTOFF VE004	36-10-20-04	-015
VALVE ASSY-ENTRANCE DOOR SEALS	52-11-00-01	-001
VALVE ASSY-THRUST REVERSER SELECTOR VT034	78-30-10-02	-075
VALVE ASSY-BI-LEVEL FLOW CONTROL VT005	21-21-00-01	-004
VALVE ASSY-BI-LEVEL FLOW CONTROL VT006	21-21-00-01	-005
VALVE ASSY-CENTER TANK REFUEL	28-21-00-02	-238
VALVE ASSY-FRESH AIR CHECK	21-27-00-01	-001
VALVE ASSY-FUEL SEQUENCING	28-21-00-02	-319
VALVE ASSY-FUEL SHUTOFF	28-21-00-03	-104
VALVE ASSY-LH MOTIVE FLOW FUEL SHUTOFF WT001	28-20-35-01	-001
VALVE ASSY-PILOT HIGH LEVEL FUEL	28-21-00-02	-300
VALVE ASSY-PILOT HIGHT LEVEL FUEL	28-21-00-03	-180
VALVE ASSY-PRIMARY RELIEF OUTFLOW VC003	21-33-00-01	-005
VALVE ASSY-RH MOTIVE FLOW FUEL SHUTOFF WT002	28-20-35-01	-002
VALVE ASSY-SECONDARY RELIEF OUTFLOW VF002	21-33-00-01	-004
VALVE-ANTI-ICE BLEED AIR SUPPLY ISOLATION VL005	30-10-00-02	-150
VALVE-ANTISKID CONTROL LH VY005	32-47-05-01	-001
VALVE-AUXILIARY POWER UNIT FUEL SHUTOFF	49-30-00-01	-005
VALVE-CHARGE	35-10-20-01	-091
VALVE-FUEL FLAPPER CHECK	28-11-40-01	-015
VALVE-FUEL FLAPPER CHECK	28-11-40-01	-019
VALVE-FUEL RELIEF	28-20-30-01	-029
VALVE-FUEL RELIEF OUTBOARD WING	28-11-10-01	-176
VALVE-FUEL VENT FLOAT OUTBOARD WING	28-11-10-01	-163
VALVE-FUEL VENT FLOAT OUTBOARD WING-FSO 9914505-3	28-11-10-01	-163A
VALVE-LH AND RH ANTI-ICE BLEED AIR SHUTOFF	30-20-00-02	-010
VALVE/HOUSING ASSY-FUEL PRESSURE RELIEF	28-11-20-01	-166
VENT SCOOP GUARD	28-11-20-01	-098
VENT VALVE-FUEL FWD FAIRING TANK	28-11-30-01	-001
VERTICAL FIN CLOSURE AND SPAR SPLICE INSTALLATION	55-30-00-05	-
VERTICAL FIN RIB INSTALLATION	55-30-00-04	-
VERTICAL STABILIZER	55-30-00-01	-
VERTICAL STABILIZER ACCESS PANELS	55-30-00-03	-
VERTICAL STABILIZER EROSION BOOT	55-30-05-01	-
VERTICAL STABILIZER HINGES AND FITTINGS	55-30-00-02	-
VHF ANTENNA-UPR COMM 1 YF500	23-11-10-01	-001
VHF ANTENNA-LWR COMM 2 YY500	23-11-10-01	-009
VHF ANTENNA YY501	23-11-20-01	-001

© Cessna Aircraft Company

V Continued

NOMENCLATURE	CH SEC SUBJ FIG	ITEM
VHF COMM 1 AND COMM 2 ANTENNA	23-11-10-01	-
VHF COMM 3 ANTENNA	23-11-20-01	-
VHF COMMUNICATION SYSTEM	23-11-00-01	-

W

NOMENCLATURE	CH SEC SUBJ FIG	ITEM
WARM AIR DISTRIBUTION - CABIN	21-25-75-01	-
WARM AIR DISTRIBUTION - CABIN AISLE	21-25-00-02	-
WARM AIR DISTRIBUTION - TAILCONE	21-25-00-01	-
WASTE DRAIN VALVE	38-30-15-01	-017
WASTE LINE	38-30-15-01	-
WATER FILL LINE	38-30-10-01	-
WATER SEPARATOR	21-50-20-01	-
WEATHER RADAR SYSTEM	34-43-00-01	-
WHEEL & PLACARD ASSY-NOSE LANDING GEAR	32-41-05-01	-006
WHEEL & PLACARD ASSY-NOSE LANDING GEAR	32-41-05-01	-006A
WHEEL & TIRE ASSY-NOSE LANDING GEAR	32-41-05-01	-001
WHEEL & TIRE ASSY-NOSE LANDING GEAR WHITE	32-41-05-01	-001A
WHEEL AND PLACARD ASSY-MAIN LANDING GEAR	32-41-20-01	-005
WHEEL AND PLACARD ASSY-MAIN LANDING GEAR WHITE	32-41-20-01	-005A
WHEEL AND TIRE ASSY-MAIN LANDING GEAR LH AND RH	32-41-20-01	-001
WHEEL WELL CLOSEOUT RIB STRUCTURE	57-21-03-01	-
WINDOW ASSY-LH FORWARD SIDE HEATED	56-13-00-01	-001
WINDOW ASSY-OPENABLE LH-SPARE 6211272-203	56-15-00-01	-001
WINDOW ASSY-OPENABLE LH-	56-15-00-01	-001A
WINDOW ASSY-OPENABLE RH-SPARE 6211272-204	56-15-00-01	-002
WINDOW ASSY-OPENABLE RH-	56-15-00-01	-002A
WINDOW ASSY-RH FORWARD SIDE HEATED	56-13-00-01	-002
WINDSHIELD ICE DETECTION LIGHT	33-40-30-01	-
WINDSHIELD RAIN REMOVAL	30-40-00-01	-
WINDSHIELD RAIN REMOVAL	30-40-00-01A	-
WING AILERON CONTROL CABLE	27-10-30-01	-
WING ASSEMBLY CENTER SECTION RIB INSTALLATION BL 0.00	57-10-02-04	-
WING ASSEMBLY CENTER SECTION RIB INSTALLATION W.S. 18.350	57-10-02-05	-
WING ASSEMBLY CENTER SECTION RIB INSTALLATION WS 37.00	57-10-02-06	-
WING AUXILIARY RIB INSTALLATION - INBOARD	57-20-01-03	-
WING AUXILIARY RIB INSTALLATION - OUTBOARD	57-20-01-04	-
WING CENTER SECTION ASSEMBLY	57-10-02-01	-
WING CENTER SECTION CARRY THRU BEAM INSTALLATION FS 339.220	57-10-02-02	-
WING CENTER SECTION INBOARD CARRY THRU INTERCOSTAL	57-10-02-07	-
WING CENTER SECTION OUTBOARD CARRY THRU INTERCOSTAL	57-10-02-08	-
WING DOWNWASH LIGHT	33-40-50-01	-
WING DRAINS - FLAP CANS	57-20-05-02	-
WING DRAINS - SLAT CANS	57-20-05-01	-
WING FUEL ACCESS PANELS	57-00-05-01	-
WING FUEL FILLER	28-10-05-01	-
WING FUEL OVERFULL SWITCH	28-20-65-01	-
WING FUEL TRANSFER/SCAVENGE SYSTEM	28-20-21-01	-
WING GROUNDING RECEPTACLE	28-11-45-01	-
WING INSPECTION LIGHT	33-40-25-01	-
WING INSTALLATION	57-80-00-01	-
WING LEADING EDGE - INBOARD	57-40-00-01	-
WING LEADING EDGE - OUTBOARD	57-40-00-02	-
WING NAVIGATION/ANTICOLLISION LIGHT FLASHER	33-40-17-01	-
WING RIB INSTALLATION - CWS 113.25, OUTBOARD	57-20-01-06	-
WING RIB INSTALLATION - CWS 128.60, OUTBOARD	57-20-01-07	-
WING RIB INSTALLATION - CWS 145.00, OUTBOARD	57-20-01-08	-
WING RIB INSTALLATION - CWS 161.40, OUTBOARD	57-20-01-09	-

© Cessna Aircraft Company

NOMENCLATURE	CH SEC SUBJ FIG	ITEM
W Continued		
WING RIB INSTALLATION - CWS 177.75, OUTBOARD	57-20-01-10	-
WING RIB INSTALLATION - CWS 193.00, OUTBOARD	57-20-01-11	-
WING RIB INSTALLATION - CWS 209.90, OUTBOARD	57-20-01-12	-
WING RIB INSTALLATION - CWS 228.90, OUTBOARD	57-20-01-13	-
WING RIB INSTALLATION - CWS 247.90, OUTBOARD	57-20-01-14	-
WING RIB INSTALLATION - CWS 268.05 OUTBOARD	57-20-01-15	-
WING RIB INSTALLATION - CWS 288.40 OUTBOARD	57-20-01-16	-
WING RIB INSTALLATION - CWS 307.75 AND 327.10 OUTBOARD	57-20-01-17	-
WING RIB INSTALLATION - CWS 347.10 AND 364.60 OUTBOARD	57-20-01-18	-
WING RIB INSTALLATION - CWS 382.00, 399.60 AND 419.30 OUTBOARD	57-20-01-19	-
WING RIB INSTALLATION - CWS 94.50, OUTBOARD	57-20-01-05	-
WING RIB INSTALLATION - WS 54.85, OUTBOARD	57-20-01-01	-
WING RIB INSTALLATION - WS 71.45, OUTBOARD	57-20-01-02	-
WING ROOT HEATED FAIRING	30-10-15-01	-
WING SKIN ASSY-LWR LH	57-20-00-02	-001
WING SKIN ASSY-LWR RH	57-20-00-02	-002
WING SKIN PANEL ASSEMBLY - UPPER	57-20-00-01	-
WING SKINS AND PANELS - LOWER	57-20-00-02	-
WING TRAILING EDGE - INBOARD	57-50-00-01	-
WIRE BUNDLE ASSY-FUEL ACCESS DOOR SWITCH	52-70-60-01	-001
Y		
YAW FITTING - CABIN	53-45-00-01	-
YAW STABILITY AUGMENTATION COMPUTER (YSAC)	27-24-00-01	-
YSAC MODULE ASSY-#1 LH UK303 FSO 6718022-9	27-24-00-01	-001
YSAC MODULE ASSY-#2 RH UK305 FSO 6718022-9	27-24-00-01	-002
YSAC MODULE ASSY-#1 LH UK303	27-24-00-01	-003
YSAC MODULE ASSY-#2 RH UK305	27-24-00-01	-004

© Cessna Aircraft Company

PART NUMBER	CH SEC SUBJ FIG	ITEM	REQ
000-130-100	26-20-05-01	-014	01
000-130-100	49-40-00-01	-011	01
00033128-11	33-40-35-02	-004	01
0031AP	34-25-00-01	-012	01
00861-1608-0001	34-25-00-01	-003	01
01-0770339-34	33-30-20-01	-001	01
01-0770339-34	33-30-20-01	-002	01
01-0770339-34	33-30-20-01	-003	01
01-0771148-00	33-40-17-01	-001	01
01-0771148-00	33-40-17-01	-002	01
01-0771148-01	33-40-10-01	-003	01
01-0771182-01	33-40-15-01	-025	02
01-0771182-02	33-40-15-01	-024	02
01-0771184-00	33-40-15-01	-021	02
01-0771186-02	33-40-50-01	-001	02
01-0771610-L0	33-40-45-01	-001	01
01-0771610-L0	33-40-55-01	-004	01
01-0771610-L0	33-40-55-01	-005	01
01-0771610-R0	33-40-45-01	-002	01
01-0771745-L0	33-40-25-01	-001	01
01-0771745-R0	33-40-25-01	-002	01
01-0790354-01	33-40-10-01	-001	01
0102LC1AF	34-10-20-01	-001	01
0102LC1AF	34-10-20-01	-002	01
011-00821-31	34-60-00-01	-086	02
011-00987-00	34-59-00-01	-001	NP
011-01105-40	31-40-15-01	-001	01
011-01105-40	31-40-15-01	-002	01
011-01457-01	31-40-05-01	-001	01
011-01457-01	31-40-05-01	-006	01
011-01457-01	31-40-05-01	-007	01
011-01746-00	31-32-05-01	-001	01
011-01768-00	34-43-00-01	-001	01
011-01793-00	23-50-00-01	-001	01
011-01793-00	23-50-00-01	-002	01
011-01910-50	34-60-00-01	-001	NP
011-01910-50	34-60-00-01	-002	NP
011-01910-50	34-60-00-01	-003	NP
011-01983-01	34-60-00-01	-004	01
011-01983-01	34-60-00-01	-005	01
011-01997-00	34-57-00-01	-001	01
011-01997-00	34-57-00-01	-002	01
011-02213-10	22-10-10-01	-001	01
011-02213-10	22-10-10-02	-001	01
011-02214-10	22-10-10-01	-002	01
011-02214-10	22-10-10-02	-002	01
011-02268-01	23-15-05-01	-001	01
011-02268-01	23-15-05-01	-002	01
011-02303-00	23-11-00-01	-001	01
011-02311-00	22-10-10-01	-055	01
011-02311-00	22-10-10-02	-040	01
011-02337-01	34-10-05-01	-001	01
011-02337-01	34-10-05-01	-002	01
011-02363-00	34-10-05-01	-003	02
011-02450-00	22-10-30-01	-002	01
011-02450-00	22-10-30-01	-006	01
011-02477-00	23-11-00-01	-002	01
011-02515-00	34-57-00-01	-003	02
011-02537-00	34-40-00-01	-001	01
011-02567-00	34-40-00-01	-002	01
011-02571-00	34-47-00-01	-001	01
011-02572-00	34-47-00-01	-003	01
011-02584-00	22-10-05-01	-001	01
011-02629-00	22-10-30-01	-001	01
011-02629-00	22-10-30-01	-005	01
011-02635-00	31-40-10-01	-001	01
011-02635-00	31-40-10-01	-004	01
011-02635-00	31-40-10-01	-005	01
011-02734-00	31-40-10-01	-002	01
011-02734-00	31-40-10-01	-006	02
011-02757-00	34-47-00-01	-002	01
011499000	21-29-00-01	-002	01
011598-501	21-26-00-01	-018	01
011598-501	30-40-00-01	-001	01
011598-501	30-40-00-01A	-001	01
013-00245-00	34-51-10-01	-001	01
013-00245-00	34-51-10-01	-002	01
02-0351078-01	33-40-25-01	-003	01
02-20-413-10	25-50-15-01	-092	04
0411783	27-60-20-01	-076	02
0411783-0	27-60-20-01	-077	02
050-03628-0001	23-13-00-01	-003	02
050-03629-0001	23-13-00-01	-034	02
050-03658-0001	23-13-00-01	-013	02
0523615-1	25-10-01-03	-008	01
0523616-1	25-10-01-03	-009	01
064-01072-0101	23-13-00-01	-011	01
064-01072-0101	23-13-00-01	-012	01
07-270128-000	33-40-25-01	-012	01
0800181-13	11-N-22-03	-002	01
0851JL1	34-10-00-01	-001	01
0851JL1	34-10-00-01	-002	01
0851JL1	34-10-00-01	-016	01
0863J1	34-25-00-01	-001	01
0863J1	34-25-00-01	-002	01
10-2300-1	57-30-00-01	-081	01
10-2300-2	57-30-00-01	-082	01
10-2502-1	57-30-00-01	-079	01
10-2502-2	57-30-00-01	-080	01
10-2503-1	57-30-00-01	-077	01
10-2503-2	57-30-00-01	-078	01
10-2510-1	57-30-00-01	-109	01
10-2510-2	57-30-00-01	-110	01
10-2520-1	33-40-15-01	-001	01
10-2520-1	57-30-00-01	-104	01
10-2520-10	33-40-15-01	-015	01
10-2520-10	57-30-00-01	-107	01
10-2520-2	33-40-15-01	-002	01
10-2520-2	57-30-00-01	-105	01
10-2520-5	33-40-15-01	-022	04
10-2520-5	57-30-00-01	-088	02
10-2520-9	33-40-15-01	-014	01
10-2520-9	57-30-00-01	-106	01
10-2530-3	33-40-15-01	-028	01
10-2530-3	57-30-00-01	-108	01
10-2540-1	57-30-00-01	-085	01
10-2540-3	57-30-00-01	-083	01
10-2540-4	57-30-00-01	-084	01
10-2560-1	57-30-00-01	-092	01
10-2560-10	57-30-00-01	-099	01
10-2560-2	57-30-00-01	-093	01
10-2560-3	57-30-00-01	-094	01
10-2560-4	57-30-00-01	-095	01
10-2560-5	57-30-00-01	-096	01

© Cessna Aircraft Company

PART NUMBER	CH SEC SUBJ FIG	ITEM	REQ	PART NUMBER	CH SEC SUBJ FIG	ITEM	REQ
10-2560-6	57-30-00-01	-097	01	1380	31-51-00-01	-006	01
10-2560-7	57-30-00-01	-090	01	13830-20629	32-41-05-01	-018	02
10-2560-8	57-30-00-01	-091	01	13889	32-41-05-01	-016	02
10-2560-9	57-30-00-01	-098	01	14500-5	24-40-05-01	-004	01
10-2570-1	33-40-50-01	-003	01	145130-3000	34-20-00-01	-001	NP
10-2570-1	57-30-00-01	-100	01	145130-3000	34-20-00-01	-002	NP
10-2570-2	33-40-50-01	-004	01	145138-0100	34-20-00-01	-003	02
10-2570-2	57-30-00-01	-101	01	14523-5	21-35-00-01	-009	01
10-2601-3	33-40-50-01	-008	01	147543-1	21-33-00-01	-006	03
10-2601-3	57-30-00-01	-102	01	1495	33-30-20-01	-008	01
10-2601-4	33-40-50-01	-009	01	14C02-08C	38-32-05-01	-009	01
10-2601-4	57-30-00-01	-103	01	14C02-08C	38-32-10-01	-018	01
10-2700-1	33-40-15-01	-030	01	15080-ENP	21-35-00-01	-002	01
10-2700-1	57-30-00-01	-089	01	150BP	28-10-10-01	-003	02
100-0192-01	25-25-00-01	-007	01	15401	23-60-00-01	-001	16
100-2010-100	23-70-00-01	-010	01	161-3402-E	23-50-20-01	-021	01
100-2410-04	34-15-05-01	-075	01	16920	23-60-00-01	-002	16
1006C	28-10-10-01	-007	06	171H145-4CR0114	78-30-00-01	-007A	01
10101B533	38-30-15-01	-017	01	171H145-4CR0114	78-30-00-01	-009A	01
109812-12	36-13-00-01	-008	01	171H145-6CR0094	78-30-00-01	-008A	01
10A2100-1	57-30-00-01	-075	01	171J145-4CR0114	78-30-00-01	-007	01
10A2100-2	57-30-00-01	-076	01	171J145-4CR0114	78-30-00-01	-009	01
10C1001	28-20-00-02	-016	02	171J145-6CR0094	78-30-00-01	-008	01
10S1048	34-57-00-01	-022	02	17A717-03-00	31-30-00-01	-005	01
11-470150-133	33-30-20-01	-009	01	19-170342-132	33-30-20-01	-006	01
11-470646-002	33-40-25-01	-005	01	19940929-1	29-10-00-04	-177	01
110-340	25-60-00-01	-021	01	19940929-1	29-23-05-01	-018	02
1103P0912	30-10-00-01	-011	01	19940929-1	29-23-05-01	-092	01
1103P0912	30-10-00-01	-012	01	19940929-1	32-33-00-01	-026	01
11320-14D32Y	28-11-20-01	-155A	04	19940929-1	32-49-00-01	-014	01
11320-14D32Y	28-21-00-02	-226A	01	19940929-1	32-51-05-01	-026	01
11320-15HSS49EP	32-30-00-02	-188	02	1C1784	29-10-09-01	-150	01
11320-15HSS54EP	32-43-00-02	-263	02	1C1784	29-10-09-01	-228	01
11320-15HSS64EP	32-43-00-02	-245	02	1C5570	29-10-09-01	-080	01
11320-15HSS70EP	32-20-00-01	-017	01	1H19-11	52-11-25-01	-004	01
11320-15HSS93EP	32-43-00-02	-250	02	1N1201	24-60-05-01	-094	01
113417-7	71-10-00-01	-176	04	1N1201	24-60-05-01	-095	01
114098-.625-SS-12	24-60-35-01	-003	06	2-214S469-40	30-10-20-01	-077	02
114098-.625-SS-12	24-60-35-01	-019	06	200-87293-101	31-30-00-01	-002	01
1142024-5	52-40-23-01	-002	02	200-91000-101	23-70-00-01	-008	01
115-00658-00	31-32-05-01	-003	01	200-91133-101	49-40-05-01	-003	01
115-00658-00	31-40-05-01	-002	01	200-92045-102	23-15-00-01	-011	01
115-00658-00	31-40-05-01	-008	02	200002200	24-60-05-01	-035	01
115-00658-00	34-59-00-01	-002	01	200002200	24-60-05-02	-034	01
115-01018-00	23-15-05-01	-003	02	200002200	24-60-10-01	-236	01
115-01239-00	31-40-15-01	-003	02	200002200	24-60-10-02	-236	01
115-01406-00	23-50-00-01	-003	02	200002600	24-60-05-01	-037	01
117-00254-01	34-43-00-01	-002	01	200002600	24-60-05-02	-036	01
1173T42	21-25-00-02	-035	01	200002600	24-60-10-01	-238	01
1173T42	21-25-00-02	-036	01	200002600	24-60-10-02	-238	01
117671	36-15-00-02	-089	01	20050-52	53-21-00-01	-021	02
122J-R580-SE-SS	25-50-00-01	-076A	02	200692250	24-60-05-01	-036	01
123-0149	25-25-00-01	-014	02	200692250	24-60-05-02	-035	01
12335	27-31-00-01	-030	01	200692250	24-60-10-01	-237	01
12377	28-20-00-03	-020	08	200692250	24-60-10-02	-237	01
124282-2100	34-20-00-01	-005	01	201	27-37-00-01	-001	01
124282-2100	34-20-00-01	-006	01	201	27-37-00-01	-002	01
130-4004	25-60-00-01	-028	01	2018-29	21-30-00-01	-022	01
13083-5	26-23-00-01	-004	01	2018-29	21-60-00-01	-018	01
13265	26-23-00-01	-007	02	2018-29	49-40-00-01	-017	01
13265-1	26-23-00-01	-008	02	20C112	28-11-40-01	-019	02
1380	26-20-05-01	-012	01	2100-1025-22	23-70-00-01	-007	01

© Cessna Aircraft Company

PART NUMBER	CH SEC SUBJ FIG	ITEM	REQ
2100-2045-00	31-30-00-01	-001	01
211-64237-10	34-43-00-01	-006B	02
211-64239-09	34-43-00-01	-006A	10
211127	57-00-05-01	-024	02
211430	57-00-05-01	-006	07
211430	57-00-05-01	-088	01
211431	57-00-05-01	-012	14
211431	57-00-05-01	-096	02
211432	57-00-05-01	-018	36
211432	57-00-05-01	-102	02
211433	57-00-05-01	-080	26
21243-4-10	32-43-00-02	-155	02
217-0805-01	25-60-00-01	-008	02
23056460	79-20-00-01	-001	02
23091403	76-12-00-01	-004	01
23091403	76-12-00-01	-005	01
23091403	76-12-00-01	-006	01
23091403	76-12-00-01	-007	01
2365-34	78-30-10-01	-002	01
2365-34	78-30-10-02	-077	01
2401C	33-40-35-02	-030	01
24455	21-60-00-01	-003	01
24455	21-60-00-01	-004	01
24540-150	30-20-00-02	-011	02
24540-150	36-10-20-02	-020	06
250-215-4	21-33-00-01	-034	02
250-215-4	21-35-00-01	-080	02
250-215-6	34-10-00-02	-080	02
250-215-6	36-15-00-02	-080	01
250-215-6	36-15-00-02	-164	03
250-215-6	37-10-00-01	-014	01
250-530-4	32-33-00-01	-156	01
250-530-4	32-49-00-02	-009	01
253-04-00006	31-37-00-01	-002	01
255H	21-60-00-01	-165	01
259A1PP	36-15-00-01	-024	02
259A1PP	36-15-00-02	-084	01
269A-6BT-2.5	28-21-00-02	-267	03
26S13-A-9	25-50-00-01	-156	01
27478-001	21-30-00-01	-032	01
27478-001	27-00-01-01	-004	01
27478-001	31-10-25-01	-012	01
27478-001	31-10-25-01	-015	01
27478-001	49-40-00-01	-006	01
27478-001	76-12-05-01	-005	01
27478-001	78-30-15-01	-005	01
27489	21-30-00-01	-028	01
27517-001	26-20-05-01	-011	01
27517-001	31-51-00-01	-005	01
27517-001	49-40-00-01	-009	01
280-0340	25-60-00-01	-025	01
282-0500	25-60-00-01	-009	02
282-0502	25-60-00-01	-010	02
2873-300	80-10-00-01	-188	02
29089-002	49-40-00-01	-010	01
290C4	21-33-00-01	-012	04
29102-011	21-30-00-01	-031	01
29102-011	27-00-01-01	-011	01
29102-011	27-40-00-01	-164	01
29102-011	31-10-25-01	-008	02
29102-011	76-12-05-01	-010	01
29103-001	27-00-01-01	-012	01
29103-001	76-12-05-01	-011	02
29103-003	21-30-00-01	-034	01
29103-004	21-30-00-01	-033	01
29103-004	27-40-00-01	-165	01
29103-004	31-10-25-01	-009	02
29478-001	31-10-10-01	-029	01
29478-001	31-10-15-01	-023	01
29709-001	21-30-00-01	-030	01
29709-001	27-00-01-01	-003	01
29709-001	27-00-01-01	-010	01
29709-001	27-40-00-01	-163	01
29709-001	31-10-10-01	-028	01
29709-001	31-10-15-01	-022	01
29709-001	31-10-25-01	-007	02
29709-001	31-10-25-01	-011	01
29709-001	31-10-25-01	-014	01
29709-001	49-40-00-01	-005	01
29709-001	76-12-05-01	-004	01
29709-001	76-12-05-01	-009	01
29709-001	78-30-15-01	-004	01
2C4310	29-10-09-01	-004	01
2C4310	29-10-09-01	-005	01
2C4310	29-10-09-01	-077	01
2C4310	29-10-09-01	-154	01
2C4310	29-10-09-01	-225	01
2C4312	29-10-09-01	-156	01
2C4312	29-10-09-01	-226	01
2C4340	29-10-09-01	-001	01
2C4340	29-10-09-01	-002	01
2C4340	29-10-09-01	-075	01
2C4340	32-51-00-01	-091	01
2C4340	32-51-05-01	-103	01
2C4360	29-10-00-07	-008	01
2C4360	29-10-09-01	-300	01
2C4360	32-47-00-01	-005	02
2S2940	80-10-00-01	-186	01
30-1767-1	33-30-30-01	-001	01
30008	32-30-20-01	-013	01
306-5314	27-10-50-01	-346	01
306-5314	27-40-00-01	-156	01
30621-6400	80-10-00-01	-076	01
30622-250	36-13-00-01	-019	01
30903824-1	26-20-15-01	-005	01
3102-56-00	21-33-00-01	-022	02
3104-56-00	21-33-00-01	-025	01
3104-56-00	37-10-00-01	-003	01
3106	26-10-00-01	-009	AR
3106	26-10-00-01	-014	AR
3106	26-11-00-01	-008	14
3106-56-00	21-33-00-01	-002	01
3106-56-00	37-10-00-01	-078	02
3175-56-11	21-35-00-01	-003	01
32-485-3	32-41-05-01	-009	01
325A62-200S	32-20-00-02	-167	01
32C112-3	28-11-40-01	-015	02
33-07250060-0	33-40-25-01	-010	01
340077	73-10-00-01	-035	01
340077	73-10-00-02	-037	01
340082	73-10-00-01	-033	01
340082	73-10-00-02	-036	01
347100000	34-25-00-01	-022	01
34A0228070-67	33-40-25-01	-009	01

© Cessna Aircraft Company

PART NUMBER	CH SEC SUBJ FIG	ITEM	REQ	PART NUMBER	CH SEC SUBJ FIG	ITEM	REQ
3505-8014	27-50-20-01	-016	02	4416075-111	11-N-23-02	-154	01
35201007-6	26-20-30-01	-005	02	4417017-1	21-23-20-01	-005	01
37009-4-0057	35-20-00-01	-082	04	4417017-13	21-23-20-01	-011	01
37009-4-0102	35-20-00-01	-096	01	4417017-2	21-23-20-01	-006	01
37009-4-0140	35-20-00-01	-097	01	4417018-4	21-23-20-01	-009	01
37009-4-0160	35-20-00-01	-085	01	4417018-9	21-23-20-01	-008	01
37009-4-0220	35-20-00-01	-089	01	4417020-10	35-20-10-01	-003	07
37009-5-0160	35-20-00-01	-075	01	4417032-1	21-25-20-01	-001	01
38-0250558-00	33-40-25-01	-004	01	4417032-13	21-25-20-01	-075	01
38-701	26-23-00-01	-009	02	4417032-14	21-25-20-01	-076	01
38015-5-0090	35-10-00-01	-017	01	4417032-15	21-25-20-01	-042	01
38015-5-0094	35-10-00-01	-016	01	4417032-16	21-25-20-01	-037	01
38018001	32-45-00-01	-001	01	4417032-17	21-25-20-01	-047	01
38020100	32-43-00-01	-075	02	4417032-18	21-25-20-01	-048	01
3A	11-00-00-01	-079	AR	4417032-2	21-25-20-01	-002	01
3A11200321-2	27-35-00-02	-007B	02	4417032-27	21-25-20-01	-081A	01
3A1322A	55-20-10-01	-001	01	4417032-28	21-25-20-01	-082A	01
3A1322A	55-20-10-01	-002	01	4417032-3	21-25-20-01	-081	01
3A1322A	55-40-00-02	-001	01	4417032-30	21-25-20-01	-037A	01
3A1322A	57-60-00-03	-001	01	4417032-31	21-25-20-01	-001A	01
3A1322A	57-60-00-03	-002	01	4417032-32	21-25-20-01	-002A	01
3B1225B	27-63-05-01	-007	01	4417032-4	21-25-20-01	-082	01
3G5212C	27-40-00-01	-150	01	4417032-5	21-25-20-01	-024	01
3P1-221B	27-40-00-01	-151	01	4417032-6	21-25-20-01	-025	01
3X	11-00-00-01	-039	AR	4417033-23	21-25-20-01	-086	01
40000-15	53-21-00-01	-021A	02	4417033-24	21-25-20-01	-087	01
40240-1385	33-30-10-01	-001	01	4417033-27	21-25-20-01	-088	01
405006A-PMA	23-15-00-01	-086	01	4417033-28	21-25-20-01	-039	01
405016A	23-15-00-01	-091	01	4417033-29	21-25-20-01	-030	01
405019A	23-15-00-01	-089	01	4417033-30	21-25-20-01	-031	01
405040A	23-15-00-01	-010	01	4417033-31	21-25-20-01	-009	01
405040A-004	23-15-00-01	-025	01	4417033-32	21-25-20-01	-010	01
405040A-004	23-15-00-01	-026	01	4417033-33	21-25-20-01	-011	01
41032-6-0110	38-32-10-01	-004	01	4417033-34	21-25-20-01	-012	01
41032-6-0280	38-32-05-01	-001	01	4417033-39	21-25-20-01	-013	01
41032-6-0462	38-32-10-01	-001	01	4417033-4	21-25-20-01	-026	01
4119-0011-6	27-40-00-01	-013	01	4417033-4	21-25-20-01	-049	01
4169	29-10-00-08	-008	01	4417033-40	21-25-20-01	-014	01
4169	29-10-00-08	-086	01	4417033-43	21-25-20-01	-089	01
4194-102	34-15-05-01	-076	01	4417033-44	21-25-20-01	-090	01
4206-0008-3	27-40-00-01	-014	01	4417033-47	21-25-20-01	-083	01
42RT100-3	29-10-00-01	-081	01	4417033-48	21-25-20-01	-091	02
42RT100-3	29-10-00-02	-009	01	4417033-50	21-25-20-01	-040	01
4416000-102	11-N-28-02	-001	01	4417033-53	21-25-20-01	-041	01
4416000-105	11-N-28-02	-002	01	4417033-55	21-25-20-01	-016	03
4416000-108	11-N-28-01	-001	01	4417033-56	21-25-20-01	-020	01
4416000-111	11-N-23-01	-004	01	4417033-57	21-25-20-01	-015	02
4416000-111	11-N-28-01	-002	01	4417033-68	21-25-20-01	-040A	01
4416000-114	11-N-28-01	-003	01	4417033-69	21-25-20-01	-016A	03
4416000-130	11-N-23-01	-002	02	4417042-9	21-25-75-01	-077	01
4416000-145	11-N-33-03	-002	NP	4417042-9	21-25-75-01	-080	03
4416000-146	11-N-33-03	-003	01	4419027-11	21-25-20-01	-046	02
4416001-36	11-N-22-02	-004	02	4419036-33	21-28-00-01	-014	01
4416002-212	11-N-23-01	-006	01	4419036-33	21-28-00-01	-015	01
4416004-144	11-N-33-03	-004	01	4419087-30	52-10-31-01	-101A	01
4416004-17	11-N-28-03	-002	01	4419087-31	52-10-31-01	-102A	01
4416004-184	11-N-28-03	-003	01	4419347-2	26-21-00-01	-009	01
4416004-187	11-N-28-03	-004	01	4419387-12	52-10-31-01	-016	12
4416004-189	11-N-23-02	-151	01	44210-10F-E17	29-10-80-01	-004	01
4416004-93	11-N-23-01	-003	01	44210-10F-E17	29-10-80-01	-084	01
4416004-96	11-N-23-01	-007	01	44216-12F-E17	29-10-80-01	-011	01
4416004-99	11-N-28-03	-001	01	44216-12F-E17	29-10-80-01	-077	01

© Cessna Aircraft Company

PART NUMBER	CH SEC SUBJ FIG	ITEM	REQ
44387-001	21-30-00-01	-029	01
44387-001	26-20-05-01	-013	01
44387-001	27-00-01-01	-002	01
44387-001	27-00-01-01	-009	01
44387-001	27-40-00-01	-162	01
44387-001	31-51-00-01	-007	01
44387-001	49-40-00-01	-004	01
44387-001	49-40-00-01	-008	01
44387-001	76-12-05-01	-006	02
44387-001	76-12-05-01	-012	02
44387-001	78-30-15-01	-006	02
444160	35-10-05-01	-007	02
44874	28-21-00-01	-032	01
450040150	24-60-05-01	-034	02
450040150	24-60-05-02	-033	02
450040150	24-60-10-01	-235	01
450040150	24-60-10-02	-235	01
452-16-6	28-10-05-01	-003	02
452-3052	25-60-00-01	-003	01
452-5050	25-60-00-01	-002	01
452-5066	25-60-00-01	-007	01
453-0022	25-60-00-01	-029	01
453-5060	25-60-00-01	-001	01
4573-300	21-35-00-01	-010	01
4573-400	21-33-00-01	-010	02
4594	33-40-35-01	-001	02
4594	33-40-35-01	-002	02
460-0116-16	73-10-00-01	-018	01
460-0116-16	73-10-00-02	-016	01
460-0116-24	28-21-00-02	-077	02
460-015-24	28-21-00-02	-094	04
4611014-10	38-32-10-01	-010	01
4611014-12	38-32-10-01	-013	01
4611014-13	38-32-10-01	-007	01
4611014-14	38-32-10-01	-012	01
4611259-2	38-30-05-01	-008	01
4611259-3	38-30-05-01	-009	01
4611266-1	52-10-19-01	-169	01
4611809-3	52-20-10-01	-020	01
4611809-5	52-20-10-01	-017	01
46863-004	76-12-05-01	-007	01
46863-004	76-12-05-01	-008	01
46863-005	80-10-00-01	-002	01
46863-005	80-10-00-01	-003	01
46863-006	80-10-00-01	-001	01
46863-011	33-10-35-01	-009	10
46863-012	31-10-10-01	-017	01
46863-012	31-10-10-01	-019	01
46863-012	31-10-10-01	-021	01
46863-012	31-10-15-01	-011	01
46863-012	31-10-15-01	-012	01
46863-013	31-10-15-01	-013	01
46863-013	31-10-15-01	-014	01
46863-013	31-10-15-01	-015	01
46863-013	31-10-15-01	-017	01
46863-013	31-10-15-01	-018	01
46863-013	31-10-25-01	-010	01
46863-013	49-40-00-01	-002	01
46863-013	49-40-00-01	-003	01
46863-014	31-10-10-01	-018	01
46863-014	31-10-10-01	-020	01
46863-015	31-10-10-01	-025	01
46863-015	31-10-10-01	-026	01
46863-016	31-10-10-01	-022	01
46863-016	31-10-10-01	-024	01
46863-017	31-10-10-01	-023	01
46863-018	31-10-10-01	-027	01
46863-019	31-10-10-01	-016	01
46863-019	31-10-15-01	-019	01
46863-020	31-10-10-01	-014	01
46863-020	31-10-15-01	-021	01
46863-021	31-10-15-01	-016	01
46863-022	31-10-25-01	-005	01
46863-022	31-10-25-01	-006	01
46863-023	27-50-00-02	-010	01
46863-023	31-10-25-01	-013	01
46863-024	76-12-05-01	-002	01
46863-024	76-12-05-01	-003	01
46863-025	78-30-15-01	-002	01
46863-025	78-30-15-01	-003	01
46863-026	21-30-00-01	-027	01
46863-028	21-30-00-01	-026	01
46863-031	21-30-00-01	-024	01
46863-032	21-30-00-01	-025	01
46863-033	27-00-01-01	-005	01
46863-034	27-00-01-01	-006	01
46863-035	27-00-01-01	-007	01
46863-036	27-00-01-01	-008	01
46863-037	27-00-01-01	-001	01
46863-038	31-10-10-01	-015	01
46863-038	31-10-15-01	-020	01
46863-039	27-40-00-01	-161	01
46863-201	31-51-00-01	-001	01
46863-201	31-51-00-01	-002	01
46863-202	31-51-00-01	-003	01
46863-202	31-51-00-01	-004	01
46863-203	26-20-05-01	-007	01
46863-204	26-20-05-01	-008	01
46863-206	26-20-05-01	-009	01
46863-207	26-20-05-01	-010	01
46863-208	49-40-00-01	-007	01
4699002-7	38-30-00-01	-001	01
4710173-47	35-20-10-01	-006	06
4710173-47	35-20-10-01	-012	02
47160-437	33-10-35-01	-002	04
4717408-3	38-32-05-01	-012	01
4717408-3	38-32-10-01	-022	01
4717408-4	38-32-05-01	-013	01
4717408-4	38-32-10-01	-021	01
4717408-5	38-32-05-01	-014	01
4717408-5	38-32-10-01	-020	01
47198-003	33-10-35-01	-001	01
47412-002	33-10-35-01	-006	01
47413-005	33-10-35-01	-004	01
47414-002	33-10-35-01	-005	01
47415-001	33-10-35-01	-008	01
485000-48	29-10-10-01	-010	01
485000-48	29-10-10-01	-161	01
49-310	32-41-05-01	-012	01
49-336	32-41-20-01	-008	01
4919243-13	11-N-23-02	-153	01
4938006-3	38-30-00-02	-002	01
4938006-4	38-30-00-02	-003	01
4X	11-00-00-01	-048	AR

© Cessna Aircraft Company

PART NUMBER	CH SEC SUBJ FIG	ITEM	REQ
5-1437622-7	31-10-10-01	-031	01
5-1437622-7	31-10-15-01	-025	01
5-1437622-7	31-10-20-01	-014	01
5-70-30	23-11-20-01	-007	01
5-70-30	23-15-00-01	-023	01
5-70-30	23-15-00-01	-024	01
5-70-30	53-20-00-02A	-003	01
5-70-30	53-20-00-02A	-004	01
5-70-30	53-20-00-02A	-005	01
5-70-30	53-20-00-02A	-007	01
5-70-30	53-20-00-02A	-010	01
5-70-30	53-20-00-02A	-011	01
5-70-30	53-20-00-02A	-012	01
5-70-30	53-20-00-02A	-013	01
5-70-30	53-20-00-02A	-014	01
5-70-30	53-20-00-02A	-015	01
5-70-30	53-20-00-02A	-017	01
5-70-30	53-20-00-02A	-018	01
5-70-30	53-20-00-02A	-019	01
5-70-30	53-20-00-02A	-020	01
5-70-30	53-20-00-02A	-021	01
5-70-30	53-23-00-03A	-008	01
5-70-30	53-23-00-03A	-009	01
5-70-30	53-23-00-03A	-017	01
5-70-30	53-23-00-03A	-018	01
500-28986-01	23-11-10-01	-007	01
500-28986-02	23-11-10-01	-012	01
500-28986-03	23-11-10-01	-013	01
500-28986-04	23-11-10-01	-014	01
500-28991-01	23-15-05-01	-025	01
500-28991-11	23-15-05-01	-024	01
500-28992-01	23-13-00-01	-083	01
500-28992-02	23-13-00-01	-076	02
500-28992-03	23-13-00-01	-081	01
500-28992-11	23-13-00-01	-084	01
500-28992-13	23-13-00-01	-082	01
500-28997-01	23-15-45-01	-009	01
500-28997-02	23-15-45-01	-010	01
500-28999-12	23-15-00-01	-021	01
500-28999-13	23-15-00-01	-022	01
500-28999-14	23-15-00-01	-019	01
500-28999-15	23-15-00-01	-020	01
500-29001-01	31-32-10-01	-006	01
500-29007-01	23-11-20-01	-005	01
500-29007-02	23-11-20-01	-006	01
500-29024-02	31-32-10-01	-005	01
500-31442-01	31-35-00-01	-007	01
500-31442-02	31-35-00-01	-008	01
500-95038-01	23-13-00-01	-087	01
500-95038-02	23-13-00-01	-088	01
5001815	38-32-10-01	-011	01
501-1826-03	34-21-10-01	-001	01
503	56-15-00-01	-083	01
5035-00-1	52-11-20-01	-017	01
5111339-3	53-10-05-01	-002	12
51134-150S	30-20-00-02	-003	01
515	23-50-15-01	-001	02
515	23-50-15-01	-006	02
515X	23-50-15-01	-001A	02
515X	23-50-15-01	-006A	02
52-2050	21-60-00-01	-015	AR
52-2050	31-10-10-01	-013	AR
52-2050	31-10-20-01	-011	AR
52-2050	49-40-00-01	-015	AR
53-1375-0053	32-45-00-01	-009	01
53-1761-0162	32-45-00-01	-006	01
53-4774-4121	32-45-00-01	-005	01
5303-2A	21-35-00-01	-001	01
5501001-119	11-N-26-01	-004	01
5501001-30	11-N-22-03	-003	01
5504FINGER-GUARD	21-28-00-01	-013	02
5504FINGER-GUARD	21-29-00-01	-007	01
5511230-29	52-30-20-01	-001	01
5511230-66	52-30-20-01	-041	01
5514155-2	25-25-00-01	-002	01
5514160-37	32-35-00-01	-041	02
5514170-9	32-35-00-01	-001	01
5518154-21	34-24-01-01	-006	01
5518154-22	34-24-01-01	-007	02
5522100-3	28-11-45-01	-001	02
5522100-3	57-40-00-02	-082	02
5527401-3	32-31-05-01	-018	01
5527401-3	32-31-25-01	-029	01
5538341-20	24-60-10-01	-028	01
5538341-20	24-60-10-02	-028	01
5550001-9	11-N-25-02	-080	06
5565600-5	27-25-00-01	-114	01
5565600-5	27-25-00-01	-178	01
5565600-5	27-25-00-01	-249	01
5565600-5	27-25-00-01	-306	01
5565603-1	27-25-00-01	-121	01
5565603-1	27-25-00-01	-259	01
5565603-2	27-25-00-01	-154	01
5565603-2	27-25-00-01	-316	01
5565612-1	27-25-00-01	-083	01
5565612-1	27-25-00-01	-183	01
5565612-1	27-25-00-01	-255	01
5565612-1	27-25-00-01	-312	01
5565616-1	27-25-00-01	-111	01
5565616-1	27-25-00-01	-246	01
5565616-2	27-25-00-01	-175	01
5565616-2	27-25-00-01	-303	01
5565616-3	27-25-00-01	-120	01
5565616-3	27-25-00-01	-153	01
5565616-3	27-25-00-01	-263	01
5565616-3	27-25-00-01	-320	01
5596500-3	27-37-00-01	-008	02
5617115-1	21-31-00-01	-001	01
5617115-1	21-33-00-01	-035	02
5617115-1	21-35-00-01	-075	01
5715526-7	21-50-20-01	-012	01
5715526-8	21-50-20-01	-011	01
57493-10	71-10-00-01	-246	04
57979-3	30-20-00-02	-012	01
57979-4	30-10-20-01	-010	01
580-113	38-30-10-01	-007	01
580-250	38-30-10-01	-009	01
5N	11-00-00-01	-084	AR
6-0407-1	32-61-00-01	-008	01
6-0407-1	32-61-00-01	-081	01
6-0407-1	32-61-00-01	-082	01
600-391	24-20-00-01	-009	01
600-442001-01	21-60-00-01	-153	02
602EN602-6	33-30-30-01	-004	01

© Cessna Aircraft Company

PART NUMBER	CH SEC SUBJ FIG	ITEM	REQ
602EN602-6	52-70-50-01	-006	01
602EN602-6	52-70-60-01	-002	01
603S0A101	49-40-05-01	-002	01
60W1251T129	52-10-13-01	-021	01
60W1251T129	52-40-01-01	-019	01
60W1251T129	52-40-07-01	-002	01
60W1251T129	52-40-37-01	-028	01
60W1251T129	52-40-37-01	-177	01
60W1252T129	52-30-20-01	-039	01
61084-2	28-21-00-02	-075	01
61084-2	28-21-00-02	-092	02
61632	28-21-00-02	-319	01
6200181-103	11-N-25-02	-003	01
6200181-75	11-N-22-03	-001	01
6211101-11	53-20-02-03	-013	01
6211101-12	53-20-02-03	-014	01
6211101-2	53-20-02-03	-007	02
6211101-73	53-20-02-04	-003	01
6211101-73	56-10-00-01	-004	01
6211101-74	53-20-02-04	-004	01
6211101-74	56-10-00-01	-005	01
6211172-133	53-20-02-04	-010	01
6211172-133	56-10-00-01	-013	01
6211172-134	53-20-02-04	-011	01
6211172-134	56-10-00-01	-014	01
6211172-145	53-20-02-01	-022	01
6211172-146	53-20-02-01	-023	01
6211172-183	53-20-02-01	-003	01
6211172-184	53-20-02-01	-004	01
6211172-185	53-20-02-01	-005	01
6211172-186	53-20-02-01	-006	01
6211172-187	53-20-02-01	-009	01
6211172-188	53-20-02-01	-010	01
6211172-189	53-20-02-01	-007	01
6211172-190	53-20-02-01	-008	01
6211172-195	53-20-02-01	-084	01
6211172-196	53-20-02-01	-085	01
6211172-197	53-20-02-01	-097	02
6211172-198	53-20-02-01	-081	01
6211172-199	53-20-02-01	-080	01
6211172-401	53-20-02-01	-082	01
6211172-402	53-20-02-01	-083	01
6211172-407	53-20-02-03	-008	01
6211172-408	53-20-02-03	-009	01
6211172-414	53-20-02-01	-025	NP
6211172-415	53-20-02-01	-024	NP
6211172-51	53-20-02-04	-001	01
6211172-51	56-10-00-01	-006	01
6211172-52	53-20-02-04	-002	01
6211172-52	56-10-00-01	-007	01
6211172-73	53-20-02-01	-011	02
6211172-89	53-20-02-01	-088	01
6211172-90	53-20-02-01	-089	01
6211172-95	53-20-02-01	-090	01
6211172-96	53-20-02-01	-091	01
6211176-105	53-20-01-06	-014	01
6211176-106	53-20-01-06	-015	01
6211176-107	53-20-01-06	-016	01
6211176-108	53-20-01-06	-017	01
6211176-109	53-20-01-06	-018	01
6211176-110	53-20-01-06	-019	01
6211176-111	53-20-01-06	-020	01
6211176-112	53-20-01-06	-021	01
6211176-113	53-20-01-06	-008	01
6211176-114	53-20-01-06	-009	01
6211176-115	53-20-01-06	-011	01
6211176-116	53-20-01-06	-012	01
6211176-119	53-20-02-01	-150	01
6211176-120	53-20-02-01	-151	01
6211176-137	53-20-02-01	-237	01
6211176-138	53-20-02-01	-238	01
6211176-152	53-20-01-06	-027	01
6211176-153	53-20-01-06	-026	01
6211176-41	53-20-01-06	-006	01
6211176-42	53-20-01-06	-007	01
6211176-43	53-20-02-02	-013	01
6211176-44	53-20-02-02	-014	01
6211176-45	53-20-02-02	-015	01
6211176-46	53-20-02-02	-016	01
6211176-47	53-20-02-02	-017	01
6211176-48	53-20-02-02	-018	01
6211176-53	53-20-01-06	-024	01
6211176-54	53-20-01-06	-025	01
6211176-55	53-20-01-06	-022	01
6211176-56	53-20-01-06	-023	01
6211176-85	53-20-02-01	-169	01
6211176-86	53-20-02-01	-170	01
6211176-89	53-20-02-01	-175	01
6211176-90	53-20-02-01	-176	01
6211176-91	53-20-02-01	-152	01
6211176-91	53-20-02-01	-161	01
6211176-91	53-20-02-01	-171	01
6211176-92	53-20-02-01	-153	01
6211176-92	53-20-02-01	-162	01
6211176-92	53-20-02-01	-172	01
6211176-93	53-20-02-01	-154	01
6211176-93	53-20-02-01	-163	01
6211176-94	53-20-02-01	-155	01
6211176-94	53-20-02-01	-164	01
6211176-95	53-20-02-01	-156	01
6211176-95	53-20-02-01	-165	01
6211176-96	53-20-02-01	-157	01
6211176-96	53-20-02-01	-166	01
6211176-99	53-20-02-01	-167	02
6211190-15	53-12-00-02	-075	02
6211190-16	53-12-00-02	-076	01
6211190-33	53-12-00-02	-027	01
6211256-10	56-20-00-01	-006	01
6211256-8	56-20-00-01	-005	01
6211260-6	56-20-00-01	-010	13
6211270-25	56-15-00-01	-098	01
6211270-26	56-15-00-01	-099	01
6211272-103	56-15-00-01	-001	01
6211272-104	56-15-00-01	-002	01
6211272-15	56-15-00-01	-076	01
6211272-203	56-15-00-01	-001A	01
6211272-204	56-15-00-01	-002A	01
6211272-27	56-15-00-01	-019	01
6211272-28	56-15-00-01	-084	01
6211272-39	56-15-00-01	-018	01
6211272-40	56-15-00-01	-025	01
6211272-43	56-15-00-01	-080	01
6211272-44	56-15-00-01	-081	01
6211272-47	56-15-00-01	-082	01

© Cessna Aircraft Company

PART NUMBER	CH SEC SUBJ FIG	ITEM	REQ
6211272-65	56-15-00-01	-075	01
6211272-69	56-15-00-01	-009	01
6211272-70	56-15-00-01	-010	01
6211272-71	56-15-00-01	-007	01
6211272-72	56-15-00-01	-008	01
6211272-95	56-15-00-01	-013	01
6211272-96	56-15-00-01	-012	01
6211272-98	56-15-00-01	-023	01
6211272-99	56-15-00-01	-022	01
6211280-27	52-10-19-01	-036	01
6211281-5	52-10-19-01	-083	01
6211281-6	52-10-19-01	-084	01
6211282-12	52-10-19-01	-082	03
6211282-12	52-10-19-01	-153	02
6211303-35	52-10-19-01	-028	02
6211303-36	52-10-19-01	-030	02
6211303-38	52-10-19-01	-029	01
6211303-52	52-10-19-01	-031	01
6211303-53	52-10-19-01	-032	01
6211310-2	53-10-05-01	-003	01
6211311-2	52-10-09-01	-025	02
6211329-2	52-11-00-01	-001	01
6211346-2	52-10-09-01	-018	02
6211346-2	53-12-15-01	-155	02
6211366-9	52-10-19-01	-085	02
6211402-2	56-13-00-01	-009	02
6211405-11	56-11-05-01	-005	01
6211405-14	56-11-05-01	-006	01
6211405-3	56-11-05-01	-011	01
6211405-5	56-11-05-01	-013	01
6211405-6	56-11-05-01	-014	01
6211405-8	56-11-05-01	-009	01
6211405-9	56-11-05-01	-008	01
6211407-3	56-13-00-01	-007	01
6211407-4	56-13-00-01	-008	01
6211407-5	56-13-00-01	-006	04
6211409-12	56-15-00-01	-089	04
6211409-17	56-15-00-01	-093	02
6211409-18	56-15-00-01	-092	02
6211409-19	56-15-00-01	-088	AR
6211409-4	56-15-00-01	-100	01
6211409-5	56-15-00-01	-101	01
6211409-6	56-15-00-01	-087	02
6211409-7	56-15-00-01	-086	02
6211409-8	56-15-00-01	-085	02
6211410-3	53-20-02-03	-002	01
6211410-4	53-20-02-03	-003	01
6211410-5	53-20-02-03	-004	01
6211411-1	53-20-02-02	-004	01
6211411-2	53-20-02-02	-006	01
6211411-3	53-20-02-02	-005	01
6211411-4	53-20-02-02	-003	01
6211413-1	53-20-02-01	-014	01
6211413-11	53-20-02-01	-012	NP
6211413-12	53-20-02-01	-013	NP
6211413-13	53-20-02-01	-012A	01
6211413-14	53-20-02-01	-013A	01
6211413-15	53-20-02-01	-024A	01
6211413-16	53-20-02-01	-025A	01
6211413-2	53-20-02-01	-015	01
6211413-3	53-20-02-01	-016	01
6211413-4	53-20-02-01	-017	01
6211413-5	53-20-02-01	-018	01
6211413-6	53-20-02-01	-019	01
6211413-7	53-20-02-01	-020	01
6211413-8	53-20-02-01	-021	01
6211415-10	53-20-02-01	-076	01
6211415-15	53-20-02-01	-077	01
6211415-16	53-20-02-01	-078	01
6211415-17	53-20-02-01	-098	01
6211415-18	53-20-02-01	-099	01
6211415-19	53-20-02-01	-100	01
6211415-20	53-20-02-01	-101	01
6211415-7	53-20-02-01	-079	02
6211415-9	53-20-02-01	-075	01
6211417-3	53-20-02-01	-001	01
6211417-4	53-20-02-01	-002	01
6211424-10	53-20-02-01	-228	01
6211424-10	56-10-00-01	-016	01
6211424-11	53-20-02-01	-225	01
6211424-11	56-10-00-01	-017	01
6211424-12	53-20-02-01	-226	01
6211424-12	56-10-00-01	-018	01
6211424-15	53-20-02-02	-009	01
6211424-16	53-20-02-02	-010	01
6211424-17	53-20-02-02	-011	01
6211424-18	53-20-02-02	-012	01
6211424-9	53-20-02-01	-227	01
6211424-9	56-10-00-01	-015	01
6211425-3	53-20-02-02	-002	01
6211425-4	53-20-02-02	-001	01
6211425-5	53-20-02-02	-007	01
6211425-6	53-20-02-02	-008	01
6211427-10	53-20-02-01	-174	01
6211427-5	53-20-02-01	-159	01
6211427-6	53-20-02-01	-160	01
6211427-9	53-20-02-01	-173	01
6211430-3	53-20-01-06	-010	02
6211430-4	53-20-01-06	-013	01
6211431-1	53-20-02-04	-017	01
6211431-2	53-20-02-04	-018	01
6211431-3	53-20-02-04	-019	01
6211431-4	53-20-02-04	-020	01
6211434-3	53-20-02-04	-021	01
6211434-4	53-20-02-04	-022	01
6211434-5	53-20-02-04	-023	01
6211434-6	53-20-02-04	-024	01
6211434-7	53-20-02-04	-025	01
6211434-8	53-20-02-04	-026	01
6211435-4	53-20-02-04	-005	02
6211435-4	56-10-00-01	-001	02
6211436-3	53-20-02-04	-008	01
6211436-3	56-10-00-01	-011	01
6211436-4	53-20-02-04	-009	01
6211436-4	56-10-00-01	-012	01
6211436-5	53-20-02-04	-012	02
6211436-5	56-10-00-01	-010	02
6211437-1	53-20-02-04	-014	01
6211437-2	53-20-02-04	-016	01
6211438-1	53-20-01-06	-001	01
6211438-2	53-20-01-06	-002	01
6211439-4	53-20-01-06	-003	01
6211439-5	53-20-01-06	-004	01
6211439-6	53-20-01-06	-005	01

© Cessna Aircraft Company

PART NUMBER	CH SEC SUBJ FIG	ITEM	REQ	PART NUMBER	CH SEC SUBJ FIG	ITEM	REQ
6211440-10	53-20-02-01	-232	01	6226260-35	28-11-20-01	-084	01
6211440-3	53-20-02-01	-233	01	6226260-35	28-20-00-02	-089	02
6211440-4	53-20-02-01	-234	01	6226260-35	28-20-00-02	-118	02
6211440-5	53-20-02-01	-229	01	6226260-35	28-20-21-01	-019	01
6211440-5	53-20-02-01	-235	01	6226260-35	28-20-21-01	-157	01
6211440-6	53-20-02-01	-230	01	6226260-35	28-21-00-02	-006	01
6211440-6	53-20-02-01	-236	01	6226260-35	28-21-00-02	-012	01
6211440-9	53-20-02-01	-231	01	6226260-35	28-21-00-02	-018	01
6212091-11	52-40-01-01	-012	02	6226260-35	28-21-00-02	-090	02
6212091-29	52-40-37-01	-037	01	6226260-35	28-21-00-02	-176	01
6212091-29	52-40-37-01	-186	01	6226260-35	28-21-00-02	-180	02
6213043-9	52-40-37-01	-039	01	6226260-35	28-21-00-02	-250	03
6213043-9	52-40-37-01	-188	01	6226260-35	28-21-00-02	-324	02
6213066-48	52-40-37-01	-084	01	6226260-35	28-21-00-02	-337	01
6213066-48	52-40-37-01	-232	01	6226260-35	28-21-00-03	-010	02
6213066-49	52-30-00-01	-025	01	6226260-35	28-21-00-03	-020	02
6213066-49	52-30-00-01	-033	01	6226260-35	28-21-00-03	-037	02
6213066-49	52-40-37-01	-085	01	6226260-35	28-21-00-03	-043	02
6213066-49	52-40-37-01	-233	01	6226260-35	28-21-00-03	-048	04
6213066-49	53-60-05-01	-006	01	6226260-35	28-21-00-03	-080	02
6213066-49	53-60-05-01	-013	01	6226260-35	28-21-00-03	-086	02
6213066-67	52-40-37-01	-029	01	6226260-35	28-21-00-03	-113	02
6214199-4	21-50-10-01	-009	02	6226260-35	28-21-00-03	-119	02
6214220-2	36-15-00-01	-032	01	622EN226-6	32-61-00-01	-009	01
6214220-2	36-15-00-02	-095	01	6232180-6	55-10-00-01	-008	01
6214220-5	36-15-00-02	-094	01	6236203-1	28-21-00-02	-076	01
6214354-9	36-15-00-01	-036	01	6236204-1	28-21-00-03	-108	02
6214402-20	30-10-00-02	-151	04	6238019-7	24-30-30-01	-077	01
6214650-16	52-40-15-01	-005	01	6238332-38	24-30-30-01	-001	02
6214650-17	52-40-15-01	-006	01	6238377-2	25-70-00-01	-032	01
6214650-18	52-40-15-01	-004	01	6240100-63	32-33-05-01	-005	01
6214656-36	29-10-80-01	-157	02	6241108-7	32-10-00-01	-015	AR
6215308-1	21-27-00-01	-005	02	6241108-8	32-10-00-01	-016	AR
6215308-1	21-35-00-01	-026	01	6252019-10	30-20-00-02	-035	02
6218104-8	52-70-00-01	-005	04	6252019-75	24-20-10-01	-007	01
6219376-11	52-10-31-01	-101	01	6252103-11	71-70-00-01	-038	01
6219376-12	52-10-31-01	-102	01	6260164-3	32-51-00-01	-028	02
6219376-20	52-10-31-01	-111A	AR	6260227-6	27-60-20-01	-162	02
6219376-30	52-10-31-01	-015	04	6260367-1	27-60-00-01	-008	02
6219376-30	52-10-31-01	-082	01	6260428-2	27-13-05-01	-090	01
6219376-48	52-10-31-01	-097	03	6260428-2	27-60-20-01	-003	02
6219376-49	52-10-31-01	-098	02	6260428-2	27-60-20-01	-168	02
6219376-9	52-10-31-01	-093	01	6260428-2	27-60-30-01	-004	02
6219378-2	52-10-31-01	-113	02	6260428-2	27-60-30-01	-079	04
6219394-14	38-30-15-01	-023	01	6261080-1	27-25-00-01	-119	01
622-7383-001	34-53-00-01	-005	01	6261080-1	27-25-00-01	-152	01
622-9669-002	34-53-00-01	-002	01	6261080-1	27-25-00-01	-268	01
622-9670-002	34-55-00-01	-004	02	6261080-1	27-25-00-01	-325	01
62223D	28-20-30-01	-005	04	6261081-13	27-25-00-01	-103	01
62223D	28-20-30-01	-021	04	6261081-13	27-25-00-01	-170	01
62223D	28-20-30-01	-079	04	6261081-13	27-25-00-01	-276	01
62223D	28-23-00-01	-020	04	6261081-13	27-25-00-01	-333	01
6224114-1	57-70-00-01	-011	01	6261334-9	27-13-05-01	-235	02
6224114-1	57-70-00-01	-019	01	6305000-10	11-N-22-02	-002	02
6224114-1	57-70-00-01	-036	01	6305000-9	11-N-22-02	-001	02
6224114-1	57-70-00-01	-081	01	6305310-1	11-N-22-02	-003	02
6224114-1	57-70-00-01	-085	01	6311255-11	52-20-10-01	-013	01
6224114-1	57-70-00-01	-095	01	6313100-17	53-10-10-01	-032	04
6224114-1	57-70-00-01	-099	01	6313101-25	53-10-10-01	-010	01
6226260-35	28-11-10-01	-018	01	6313101-27	53-10-10-01	-017	04
6226260-35	28-11-10-01	-083	01	6315200-5	37-10-00-01	-075	02
6226260-35	28-11-20-01	-022	02	6318015-24	27-10-50-02	-084	02

© Cessna Aircraft Company

PART NUMBER	CH SEC SUBJ FIG	ITEM	REQ	PART NUMBER	CH SEC SUBJ FIG	ITEM	REQ
6318015-24	27-10-50-02	-196	01	6614120-21	34-10-00-02	-100	01
6319018-34	25-80-03-01	-009	01	6614170-4	30-40-00-01	-012	01
6319018-34	25-80-03-01	-030	03	6614170-6	30-40-00-01A	-013	02
6319018-34	25-80-03-01	-036	02	6614175-8	30-40-00-01	-011	01
6319018-34	25-80-03-01	-048	02	6614175-8	30-40-00-01A	-020	01
6319018-34	25-80-03-01	-086	01	6618127-26	24-60-05-01	-083	01
6319018-34	25-80-03-01	-092	03	6618127-26	24-60-05-01	-086	01
6319018-34	25-80-03-01	-098	02	6618127-26	24-60-10-01	-180	01
6319018-34	25-80-03-01	-121	02	6618127-31	24-60-05-02	-084	01
6326102-1	28-11-20-01	-153	02	6618127-31	24-60-05-02	-090	01
6326102-1	28-11-20-01	-158	02	6618350-17	24-60-15-01	-007	05
6326102-1	28-11-30-01	-007	01	6618353-20	24-60-15-01	-014	02
6326102-1	28-20-00-01	-009	01	6619016-35	21-25-00-02	-023	09
6326102-1	57-10-02-06	-005	03	6619016-42	21-25-00-02	-024	10
6326102-2	28-11-20-01	-154	02	6619024-5	21-28-00-01	-002	02
6326102-2	28-11-20-01	-159	02	6665112-16	53-20-04-01	-037	01
6326102-2	28-11-30-01	-008	01	6665112-38	53-20-04-01	-031	02
6326102-2	28-20-00-01	-010	01	6701001-13	28-23-00-01	-012	01
6326102-2	57-10-02-06	-004	03	6701001-15	28-23-00-01	-003	01
6354-300	80-10-00-01	-187	01	6701001-16	28-23-00-01	-004	01
63602A	28-21-00-02	-241	04	6701001-18	28-23-00-01	-013	01
6361310-9	34-43-00-01	-007	02	6701001-20	28-23-00-01	-035	01
6376	32-43-00-02	-160	04	6701001-22	28-23-00-01	-036	01
65-1764-2056	32-33-00-01	-001	01	6701001-3	28-23-00-01	-010	01
6505010-54	11-N-33-03	-001	01	6701001-4	28-23-00-01	-011	01
6505010-98	11-N-33-03	-005	01	6701001-7	28-23-00-01	-034	01
6505010-99	11-N-33-03	-006	01	6701001-9	28-23-00-01	-033	01
6512105-6	52-30-20-01	-040	01	6701002-1	28-23-00-01	-021	02
6512105-6	52-40-01-01	-020	01	6701002-10	11-N-25-02	-075	02
6512105-6	52-40-07-01	-003	01	6701002-11	11-N-25-02	-076	02
6512105-6	52-40-37-01	-030	01	6701002-2	28-23-00-01	-025	02
6512105-6	52-40-37-01	-179	01	6701002-3	28-23-00-01	-027	02
6512105-7	52-10-13-01	-023	01	6701002-4	28-23-00-01	-031	02
6512105-7	52-30-20-01	-042	01	6701002-8	28-23-00-01	-041	02
6512105-7	52-40-01-01	-022	01	6701002-9	11-N-25-02	-077	02
6512105-7	52-40-07-01	-005	01	67020-2	32-50-25-01	-001	01
6512105-7	52-40-37-01	-031	01	67020-2	32-51-05-01	-097	01
6512105-7	52-40-37-01	-180	01	67020-2	32-51-05-01	-098	01
6514472-12	35-10-05-01	-005	02	67020-2	32-51-25-01	-001	01
6519496-15	25-50-15-01	-076	02	6705001-10	11-N-25-02	-151	01
653-9078-102	34-55-00-01	-003	01	6705001-13	11-N-25-02	-006	01
6538323-2	33-30-10-01	-005	01	6705001-17	11-N-25-02	-001	01
6565132-1	27-25-00-01	-099	01	6705001-27	11-N-25-02	-007	01
6565132-1	27-25-00-01	-172	01	6705001-27	11-N-25-02	-078	02
6565132-1	27-25-00-01	-243	01	6705001-29	11-N-25-02	-005	01
6565132-1	27-25-00-01	-300	01	6705001-4	11-N-25-02	-004	01
660-015M08T6-07	36-10-20-02	-096	02	6705001-5	11-N-25-02	-079	01
660-015M08T6-07	36-10-20-04	-087	02	6705001-7	11-N-25-02	-002	01
6610161-23	53-50-00-01	-016	02	6705001-9	11-N-25-02	-152	01
6610161-24	53-50-00-01	-017	02	6705004-1	11-N-25-03	-001	07
6611287-12	52-11-00-01	-047	01	6705004-13	11-N-25-03	-008	01
6611423-10	53-20-02-02	-024	01	6705004-15	11-N-25-03	-010	02
6611423-11	53-20-02-02	-025	01	6705004-16	11-N-25-03	-009	13
6611423-12	53-20-02-02	-026	01	6705004-2	11-N-25-03	-002	14
6611423-5	53-20-02-02	-019	01	6705004-3	11-N-25-03	-003	36
6611423-6	53-20-02-02	-020	01	6705004-4	11-N-25-03	-004	26
6611423-7	53-20-02-02	-021	01	6705004-6	11-N-25-03	-005	02
6611423-8	53-20-02-02	-022	01	6705004-7	11-N-25-03	-006	01
6611423-9	53-20-02-02	-023	01	6705004-8	11-N-25-03	-007	02
6614051-29	36-15-00-01	-076	01	6705010-1	11-N-24-01	-001	10
6614051-29	36-15-00-02	-024	01	6705010-1	11-N-25-01	-076	10
6614051-29	36-15-00-03	-012	01	6705010-2	11-N-22-01	-001	02

© Cessna Aircraft Company

PART NUMBER	CH SEC SUBJ FIG	ITEM	REQ	PART NUMBER	CH SEC SUBJ FIG	ITEM	REQ
6705010-2	11-N-23-02	-001	01	6705050-9	11-N-26-05	-075	04
6705010-2	11-N-25-01	-001	02	6705153-2	11-N-27-01	-001	02
6705010-3	11-N-25-01	-075	10	6705153-3	11-N-27-01	-079	02
6705010-4	11-N-25-01	-002	02	6705153-3	11-N-27-02	-007	AR
6705010-5	11-N-25-01	-003	02	6705153-3	11-N-27-02	-077	02
6705010-6	11-N-25-01	-004	02	6705153-4	11-N-27-01	-078	01
6705010-7	11-N-25-02	-153	02	6705154-2	11-N-27-02	-002	02
6705010-8	11-N-25-01	-005	02	6705154-4	11-N-27-01	-075	01
6705025-10	11-N-24-01	-003	02	6705154-4	11-N-27-02	-003	02
6705025-4	11-N-24-01	-002	02	6705156-1	11-N-27-02	-005	02
6705025-6	11-N-23-02	-228	01	6705156-2	11-N-27-02	-006	02
6705025-9	11-N-23-02	-227	01	6705156-4	11-N-27-02	-004	02
6705050-10	11-N-26-02	-006	01	6705157-1	11-N-27-01	-004	01
6705050-10	11-N-26-03	-083	01	6705157-2	11-N-27-01	-005	01
6705050-10	11-N-26-05	-076	04	6705261-1	11-N-26-03	-076	01
6705050-11	11-N-26-03	-079	02	6705261-2	11-N-26-03	-077	01
6705050-12	11-N-26-03	-075	02	6705261-3	11-N-26-04	-004	01
6705050-14	11-N-26-03	-081	01	6705261-5	11-N-26-01	-001	01
6705050-15	11-N-26-02	-078	01	6705361-5	11-N-27-01	-003	02
6705050-16	11-N-26-03	-002	01	6705362-1	11-N-27-02	-075	04
6705050-17	11-N-26-03	-001	01	6705362-2	11-N-27-02	-076	04
6705050-18	11-N-26-01	-002	01	6705362-5	11-N-27-02	-078	04
6705050-19	11-N-26-03	-003	01	6705362-6	11-N-27-02	-079	04
6705050-20	11-N-26-01	-003	01	6705425-4	11-N-23-02	-225	01
6705050-25	11-N-26-02	-075	01	6705425-5	11-N-23-02	-226	02
6705050-3	11-N-26-05	-001	08	6705600-5	11-N-23-01	-001	01
6705050-30	11-N-26-03	-004	01	6707004-10	29-23-00-01	-244	NP
6705050-31	11-N-26-04	-002	01	6707010-1	32-51-05-01	-033	01
6705050-32	11-N-26-02	-076	01	6707010-1	32-51-05-01	-076	01
6705050-33	11-N-26-04	-003	01	6707013-1	29-23-00-01	-244A	01
6705050-34	11-N-26-02	-079	01	6708271-7	27-80-25-01	-001	01
6705050-35	11-N-26-04	-001	02	6708271-7	27-80-25-01	-002	01
6705050-36	11-N-26-02	-077	01	6708271-7	27-80-25-01	-003	01
6705050-38	11-N-26-03	-009	02	6708271-7	27-80-25-01	-004	01
6705050-39	11-N-26-04	-006	01	6708324-5	32-47-15-01	-004	01
6705050-40	11-N-26-02	-008	01	6708324-6	32-47-15-01	-005	01
6705050-40	11-N-26-03	-085	01	6708522-11	33-30-10-01	-007	01
6705050-40	11-N-26-05	-078	04	6708522-13	52-70-60-01	-001	01
6705050-41	11-N-26-02	-007	01	6708705-14	27-50-20-01	-012	01
6705050-41	11-N-26-03	-084	01	6708705-15	27-50-20-01	-022	01
6705050-41	11-N-26-05	-077	04	6708705-16	27-50-20-01	-021	01
6705050-42	11-N-26-03	-006	01	6708705-19	27-50-20-01	-008	01
6705050-43	11-N-26-03	-005	01	6708705-20	27-50-20-01	-035	02
6705050-44	11-N-26-02	-010	01	6708705-22	27-50-20-01	-040	01
6705050-45	11-N-26-02	-009	01	6708705-24	27-50-20-01	-034	02
6705050-5	11-N-25-01	-006	10	6708705-24	27-50-20-01	-039	01
6705050-61	11-N-26-02	-001	01	6708705-27	27-50-20-01	-024	01
6705050-61	11-N-26-05	-002	04	6708705-28	27-50-20-01	-023	01
6705050-62	11-N-26-02	-003	01	6708705-29	27-50-20-01	-038	02
6705050-62	11-N-26-05	-004	04	6708705-30	27-50-20-01	-003	01
6705050-63	11-N-26-02	-002	01	6708705-31	27-50-20-01	-004	01
6705050-63	11-N-26-05	-003	04	6708705-39	27-50-20-01	-001	01
6705050-64	11-N-26-02	-004	01	6710135-10	57-21-01-01	-012	01
6705050-64	11-N-26-05	-005	04	6710135-21	57-21-01-01	-003	01
6705050-65	11-N-26-04	-005	01	6710135-22	57-21-01-01	-004	01
6705050-7	11-N-26-03	-080	01	6710135-27	57-21-01-01	-030	01
6705050-71	11-N-26-04	-007	01	6710135-28	57-21-01-01	-031	01
6705050-74	11-N-26-03	-008	01	6710135-39	57-21-01-01	-086	02
6705050-75	11-N-26-03	-007	01	6710135-41	57-21-01-01	-087	02
6705050-83	11-N-26-03	-078	02	6710135-43	57-21-01-01	-088	01
6705050-9	11-N-26-02	-005	01	6710135-45	57-21-01-01	-077	01
6705050-9	11-N-26-03	-082	01	6710135-47	57-21-01-01	-080	01

© Cessna Aircraft Company

PART NUMBER	CH SEC SUBJ FIG	ITEM	REQ	PART NUMBER	CH SEC SUBJ FIG	ITEM	REQ
6710135-5	57-21-01-01	-021	01	6710139-22	53-60-00-02	-019	01
6710135-57	57-21-01-01	-083	02	6710139-23	53-60-00-02	-011	01
6710135-6	57-21-01-01	-022	01	6710139-24	53-60-00-02	-012	01
6710135-62	38-30-15-01	-031	01	6710139-26	53-60-00-02	-014	01
6710135-64	57-21-01-01	-010	01	6710139-27	53-60-00-02	-015	01
6710135-65	57-21-01-01	-009	01	6710139-28	53-60-00-02	-016	01
6710135-67	57-21-01-01	-013	01	6710139-29	53-60-00-02	-022	01
6710135-68	57-21-01-01	-014	01	6710139-3	53-60-00-02	-017	01
6710135-7	57-21-01-01	-019	01	6710139-30	53-60-00-02	-001	01
6710135-71	38-30-15-01	-024	01	6710139-31	53-60-00-02	-013	01
6710135-73	57-21-01-01	-001	01	6710139-32	53-60-00-02	-003	01
6710135-77	57-21-01-01	-075	01	6710139-33	53-60-00-02	-024	01
6710135-78	57-21-01-01	-076	01	6710139-4	53-60-00-02	-018	01
6710135-8	57-21-01-01	-020	01	6710139-5	53-60-00-02	-021	01
6710135-9	57-21-01-01	-011	01	6710139-6	53-60-00-02	-023	01
6710136-10	57-10-00-01	-025	01	6710140-10	53-60-00-03	-024	01
6710136-13	57-10-00-01	-009	01	6710140-11	53-60-00-03	-011	01
6710136-14	57-10-00-01	-010	01	6710140-12	53-60-00-03	-012	01
6710136-21	57-10-00-01	-032	01	6710140-14	53-60-00-03	-010	01
6710136-27	57-10-00-01	-030	01	6710140-15	53-60-00-03	-017	02
6710136-35	57-10-00-01	-042	04	6710140-16	53-60-00-03	-018	02
6710136-44	57-10-00-01	-022	01	6710140-17	53-60-00-03	-006	01
6710136-45	57-10-00-01	-021	01	6710140-2	53-60-00-03	-016	01
6710136-46	57-10-00-01	-008	02	6710140-20	53-60-00-03	-008	01
6710136-47	57-10-00-01	-018	01	6710140-21	53-60-00-03	-015	01
6710136-48	57-10-00-01	-019	01	6710140-22	53-60-00-03	-014	01
6710136-49	57-10-00-01	-013	01	6710140-23	53-60-00-03	-013	01
6710136-50	57-10-00-01	-014	01	6710140-4	53-60-00-03	-025	01
6710136-52	57-10-00-01	-003	01	6710140-7	53-60-00-03	-021	01
6710136-53	57-10-00-01	-004	01	6710140-8	53-60-00-03	-022	01
6710136-54	57-21-03-01	-008	01	6710141-11	53-60-00-04	-012	01
6710136-63	57-10-00-01	-034	01	6710141-12	53-60-00-04	-013	01
6710136-64	57-10-00-01	-035	01	6710141-15	53-60-00-04	-018	01
6710136-67	57-10-00-01	-039	01	6710141-16	53-60-00-04	-003	01
6710136-68	57-10-00-01	-040	01	6710141-19	53-60-00-04	-009	01
6710136-7	57-10-00-01	-027	01	6710141-20	53-60-00-04	-021	01
6710136-72	57-10-00-01	-028	01	6710141-21	53-60-00-04	-014	01
6710136-74	57-10-00-01	-001	NP	6710141-22	53-60-00-04	-016	01
6710136-75	57-10-00-01	-024	01	6710141-23	53-60-00-04	-020	01
6710137-3	57-21-01-01	-089	01	6710141-24	53-60-00-04	-019	01
6710137-4	57-21-01-01	-090	01	6710141-25	53-60-00-04	-017	01
6710137-8	57-21-01-01	-083A	02	6710141-26	53-60-00-04	-004	01
6710138-10	53-60-00-01	-009	01	6710141-27	53-60-00-04	-008	01
6710138-11	53-60-00-01	-012	01	6710141-28	53-60-00-04	-022	01
6710138-13	53-60-00-01	-002	01	6710141-29	53-60-00-04	-001	01
6710138-18	53-60-00-01	-010	01	6710141-3	53-60-00-04	-023	01
6710138-19	53-60-00-01	-022	01	6710141-30	53-60-00-04	-002	01
6710138-2	53-60-00-01	-011	01	6710141-31	53-60-00-04	-007	01
6710138-21	53-60-00-01	-023	01	6710141-32	53-60-00-04	-026	01
6710138-3	53-60-00-01	-004	01	6710141-34	53-60-00-04	-011	01
6710138-4	53-60-00-01	-005	01	6710141-35	53-60-00-04	-025	01
6710138-6	53-60-00-01	-007	01	6710141-4	53-60-00-04	-024	01
6710138-7	53-60-00-01	-016	01	6710141-5	53-60-00-04	-005	01
6710138-8	53-60-00-01	-001	01	6710141-6	53-60-00-04	-006	01
6710138-9	53-60-00-01	-008	01	6710141-7	53-60-00-04	-010	01
6710139-10	53-60-00-02	-002	01	6710142-15	53-60-00-05	-021	01
6710139-12	53-60-00-02	-009	01	6710142-16	53-60-00-05	-022	01
6710139-14	53-60-00-02	-010	01	6710142-17	53-60-00-05	-015	01
6710139-16	53-60-00-02	-005	01	6710142-18	53-60-00-05	-018	01
6710139-17	53-60-00-02	-004	01	6710142-19	53-60-00-05	-016	01
6710139-2	53-60-00-02	-020	01	6710142-20	53-60-00-05	-019	01
6710139-21	53-60-00-02	-006	01	6710142-5	53-60-00-05	-011	01

© Cessna Aircraft Company

PART NUMBER	CH SEC SUBJ FIG	ITEM	REQ
6710142-6	53-60-00-05	-012	01
6710143-10	53-60-00-06	-013	01
6710143-11	53-60-00-06	-010	01
6710143-2	53-60-00-06	-011	01
6710143-8	53-60-00-06	-014	01
6710143-9	53-60-00-06	-012	01
6710144-10	53-60-00-06	-023	01
6710144-14	53-60-00-06	-024	01
6710144-15	53-60-00-06	-026	01
6710144-16	53-60-00-06	-027	01
6710144-17	53-60-00-06	-028	01
6710144-6	53-60-00-06	-031	01
6710144-8	53-60-00-06	-025	01
6710144-9	53-60-00-06	-022	01
6710145-10	53-20-00-13	-009	01
6710145-17	53-20-00-13	-075	01
6710145-35	53-20-00-13	-100	01
6710145-56	53-20-00-13	-088	01
6710145-59	53-20-00-13	-089	01
6710145-60	53-20-00-13	-083	01
6710145-9	53-20-00-13	-008	01
6710147-4	53-60-00-03	-005	01
6710147-5	53-60-00-03	-004	01
6710147-6	53-60-00-03	-001	01
6710147-7	53-60-00-03	-003	01
6710148-7	53-60-00-05	-001	01
6710148-8	53-60-00-05	-002	01
6710149-12	53-60-00-06	-003	01
6710149-13	53-60-00-06	-001	01
6710149-2	53-60-00-06	-009	01
6710149-3	53-60-00-06	-002	01
6710149-6	53-60-00-06	-007	01
6710149-7	53-60-00-06	-006	01
6710149-8	53-60-00-06	-008	01
6710150-18	53-50-00-01	-175	01
6710150-21	53-50-00-01	-178	01
6710150-5	53-50-00-01	-160	01
6710150-6	53-50-00-01	-161	01
6710151-2	53-50-00-01	-001	01
6710152-12	53-50-00-01	-015	02
6710153-25	32-70-00-01	-015	01
6710153-25	53-10-00-02	-003A	01
6710153-25	53-10-00-02	-076	01
6710153-25	53-42-02-01	-004	01
6710153-25	53-50-00-01	-021	01
6710153-25	55-30-10-01	-037	01
6710156-27	32-20-00-02	-158	01
6710156-40	32-20-00-02	-165	02
6710160-39	53-50-00-02	-027	01
6710160-40	53-50-00-02	-028	01
6710160-41	53-50-00-02	-037	01
6710160-42	53-50-00-02	-038	01
6710160-43	53-50-00-02	-041	01
6710160-44	53-50-00-02	-042	01
6710160-7	53-50-00-02	-014	01
6710160-8	53-50-00-02	-015	01
6710161-15	53-50-00-02	-018	01
6710161-16	53-50-00-02	-019	01
6710161-20	53-50-00-02	-002	01
6710162-14	53-50-00-02	-181	01
6710162-5	53-50-00-02	-177	01
6710163-17	53-30-00-01	-005	01
6710163-18	53-30-00-01	-006	01
6710163-33	52-40-51-01	-010	04
6710163-34	52-40-51-01	-009	04
6710163-36	52-40-51-01	-003	04
6710163-37	52-40-51-01	-001	01
6710163-38	52-40-51-01	-002	01
6710163-39	52-40-51-01	-008	08
6710164-11	53-50-00-02	-099	01
6710164-12	53-50-00-02	-100	01
6710164-17	53-50-00-02	-106	01
6710164-18	53-50-00-02	-107	01
6710164-25	53-50-00-02	-096	01
6710164-26	53-50-00-02	-097	01
6710164-28	53-50-00-02	-092	01
6710166-9	53-50-00-02	-080	02
6710170-25	52-40-51-01	-037	03
6710170-26	52-40-51-01	-036	03
6710170-27	52-40-51-01	-030	02
6710170-29	52-40-51-01	-028	04
6710170-30	52-40-51-01	-029	06
6710170-31	52-40-51-01	-038	01
6710170-32	52-40-51-01	-039	01
6710170-37	52-40-51-01	-040	06
6710172-36	53-50-00-02	-187	01
6710172-6	53-50-00-03	-005	01
6710176-100	52-40-11-01	-039	01
6710176-103	52-40-11-01	-024	01
6710176-104	52-40-11-01	-025A	01
6710176-105	52-40-11-01	-010	01
6710176-107	52-40-11-01	-030	01
6710176-108	52-40-11-01	-031	01
6710176-115	52-40-11-01	-027	02
6710176-116	52-40-11-01	-025	01
6710176-39	52-40-11-01	-028	01
6710176-40	52-40-11-01	-029	01
6710176-46	52-40-11-01	-026	04
6710176-85	52-40-11-01	-012	01
6710176-86	52-40-11-01	-013	01
6710176-87	52-40-11-01	-014	01
6710176-88	52-40-11-01	-015	01
6710176-89	52-40-11-01	-032	01
6710176-90	52-40-11-01	-033	01
6710176-91	52-40-11-01	-034	01
6710176-92	52-40-11-01	-035	01
6710176-93	52-40-11-01	-016	01
6710176-94	52-40-11-01	-017	01
6710176-95	52-40-11-01	-036	01
6710176-96	52-40-11-01	-037	01
6710176-97	52-40-11-01	-018	01
6710176-98	52-40-11-01	-019	01
6710176-99	52-40-11-01	-038	01
6710181-25	53-30-00-01	-021	01
6710181-26	53-30-00-01	-026	01
6710182-11	57-21-00-01	-013	01
6710182-12	57-21-00-01	-014	01
6710182-13	57-21-00-01	-022	01
6710182-14	57-21-00-01	-023	01
6710182-15	57-21-00-01	-018	01
6710182-16	57-21-00-01	-019	01
6710182-17	57-21-00-01	-009	01
6710182-18	57-21-00-01	-010	01
6710182-23	57-21-00-01	-024	01

© Cessna Aircraft Company

PART NUMBER	CH SEC SUBJ FIG	ITEM	REQ	PART NUMBER	CH SEC SUBJ FIG	ITEM	REQ
6710182-24	57-21-00-01	-015	01	6710231-10	53-22-00-02	-029	01
6710182-27	57-21-00-01	-001	01	6710231-11	53-22-00-02	-018	01
6710182-28	57-21-00-01	-002	01	6710231-12	53-22-00-02	-019	01
6710182-29	57-21-00-01	-005	01	6710231-14	53-22-00-02	-036	02
6710182-3	57-21-00-01	-003	01	6710231-17	53-22-00-02	-039	02
6710182-30	57-21-00-01	-006	01	6710231-2	53-22-00-02	-017	01
6710182-4	57-21-00-01	-004	01	6710231-20	53-22-00-02	-035	01
6710182-5	57-21-00-01	-007	01	6710231-21	53-22-00-02	-034	01
6710182-6	57-21-00-01	-008	01	6710231-23	53-22-00-02	-040	01
6710185-1	57-21-03-01	-001	01	6710231-24	53-22-00-02	-041	01
6710185-10	57-21-03-01	-007	01	6710231-25	53-22-00-02	-022	01
6710185-2	57-21-03-01	-002	01	6710231-26	53-22-00-02	-023	01
6710185-3	57-21-03-01	-004	01	6710231-3	53-22-00-02	-014	01
6710185-4	57-21-03-01	-005	01	6710231-4	53-22-00-02	-015	01
6710185-9	57-21-03-01	-006	01	6710231-5	53-22-00-02	-032	01
6710186-2	57-10-00-01	-001A	01	6710231-6	53-22-00-02	-033	01
6710190-2	52-40-01-01	-007	02	6710231-7	53-22-00-02	-026	01
6710190-3	52-40-01-01	-008	02	6710231-8	53-22-00-02	-027	01
6710190-4	52-40-01-01	-021	01	6710231-9	53-22-00-02	-028	01
6710190-8	52-40-01-01	-001	01	6710236-1	53-22-00-02	-089	01
6710198-12	52-40-25-01	-003	02	6710236-2	53-22-00-02	-088	01
6710198-13	52-40-25-01	-010	04	6710236-3	53-22-00-02	-090	01
6710198-14	52-40-25-01	-008	02	6710273-2	53-60-00-01	-003	01
6710198-15	52-40-25-01	-009	02	6710273-3	53-60-00-01	-014	01
6710198-9	52-40-25-01	-001	01	6710273-4	53-60-00-01	-015	01
6710206-1	53-20-00-07	-032	01	6710273-5	53-60-00-01	-006	01
6710206-2	53-20-00-07	-031	01	6710273-6	53-60-00-01	-013	01
6710206-3	53-20-00-07	-033	01	6710274-3	53-60-00-02	-008	01
6710211-1	53-20-00-08	-047	01	6710274-4	53-60-00-02	-007	01
6710211-2	53-20-00-08	-048	01	6710276-2	53-60-00-03	-019	01
6710211-4	53-20-00-08	-049	01	6710276-3	53-60-00-03	-009	01
6710216-1	53-20-00-09	-030	01	6710276-4	53-60-00-03	-023	01
6710216-2	53-20-00-09	-029	01	6710276-5	53-60-00-03	-020	01
6710221-1	53-20-00-10	-080	01	6710278-2	53-60-00-05	-004	01
6710221-10	53-20-00-10	-084	01	6710278-3	53-60-00-05	-003	01
6710221-13	53-20-00-10	-090	01	6710278-4	53-60-00-05	-006	01
6710221-14	53-20-00-10	-091	01	6710278-5	53-60-00-05	-005	01
6710221-15	53-20-00-10	-076	01	6710282-1	53-30-00-01	-013	01
6710221-16	53-20-00-10	-077	01	6710282-2	53-30-00-01	-017	01
6710221-19	53-20-00-10	-086	01	6710282-3	53-30-00-01	-010	01
6710221-2	53-20-00-10	-075	01	6710282-4	53-30-00-01	-011	01
6710221-20	53-20-00-10	-087	01	6710286-1	53-20-00-12	-041	01
6710221-21	53-20-00-10	-088	01	6710286-2	53-20-00-12	-036	01
6710221-22	53-20-00-10	-089	01	6710286-3	53-20-00-12	-037	01
6710221-23	53-20-00-10	-078	01	6710286-5	53-20-00-12	-040	01
6710221-4	53-20-00-10	-081	01	6710291-1	53-20-00-13	-010	01
6710221-5	53-20-00-10	-085	01	6710291-10	53-20-00-13	-104	01
6710221-6	53-20-00-10	-082	01	6710291-12	53-20-00-13	-085	01
6710221-7	53-20-00-10	-079	01	6710291-13	53-20-00-13	-092	01
6710221-9	53-20-00-10	-083	01	6710291-14	53-20-00-13	-093	01
6710226-1	53-22-00-01	-090	01	6710291-15	53-20-00-13	-086	01
6710226-10	53-22-00-01	-096	01	6710291-16	53-20-00-13	-087	01
6710226-11	53-22-00-01	-097	01	6710291-19	53-20-00-13	-081	01
6710226-2	53-22-00-01	-089	01	6710291-2	53-20-00-13	-011	01
6710226-3	53-22-00-01	-098	01	6710291-20	53-20-00-13	-078	01
6710226-4	53-22-00-01	-091	01	6710291-21	53-20-00-13	-022	01
6710226-5	53-22-00-01	-093	01	6710291-22	53-20-00-13	-077	01
6710226-6	53-22-00-01	-092	01	6710291-23	53-20-00-13	-001	01
6710226-7	53-22-00-01	-094	01	6710291-24	53-20-00-13	-002	01
6710226-8	53-22-00-01	-095	01	6710291-27	53-20-00-13	-024	01
6710226-9	53-22-00-01	-088	01	6710291-3	53-20-00-13	-090	01
6710231-1	53-22-00-02	-016	01	6710291-31	53-20-00-13	-021	01

© Cessna Aircraft Company

PART NUMBER	CH SEC SUBJ FIG	ITEM	REQ	PART NUMBER	CH SEC SUBJ FIG	ITEM	REQ
6710291-32	53-20-00-13	-012	01	6710323-1	53-50-00-03	-001	02
6710291-33	53-20-00-13	-079	01	6710323-2	53-50-00-03	-002	02
6710291-34	53-20-00-13	-080	01	6710325-11	32-20-00-02	-164	01
6710291-35	53-20-00-13	-013	01	6710325-2	32-20-00-02	-150	01
6710291-36	53-20-00-13	-025	01	6710325-6	32-20-00-02	-159	01
6710291-37	53-20-00-13	-099	02	6710346-3	53-50-00-01	-083	01
6710291-38	53-20-00-13	-015	01	6710346-4	53-50-00-01	-084	01
6710291-39	53-20-00-13	-098	02	6710346-8	53-50-00-01	-082	02
6710291-4	53-20-00-13	-091	01	6710355-3	53-50-00-01	-079	01
6710291-41	53-20-00-13	-027	01	6710355-4	53-50-00-01	-080	01
6710291-42	53-20-00-13	-020	01	6710360-14	53-50-00-02	-023	01
6710291-43	53-20-00-13	-097	01	6710360-3	53-50-00-02	-022	01
6710291-47	53-20-00-13	-105	01	6710360-5	53-50-00-02	-031	01
6710291-49	53-20-00-13	-101	01	6710360-6	53-50-00-02	-032	01
6710291-5	53-20-00-13	-018	01	6710361-3	53-50-00-02	-001	01
6710291-50	53-20-00-13	-102	01	6710361-4	53-50-00-02	-004	01
6710291-51	53-20-00-13	-014	01	6710361-5	53-50-00-02	-003	01
6710291-55	53-20-00-13	-006	01	6710362-2	53-50-00-02	-170	NP
6710291-56	53-20-00-13	-007	01	6710362-3	52-40-49-01	-006	01
6710291-57	53-20-00-13	-095	01	6710362-4	52-40-29-01	-003	01
6710291-58	53-20-00-13	-096	01	6710362-4	52-40-49-01	-003	01
6710291-59	53-20-00-13	-016	01	6710362-5	52-40-29-01	-001	02
6710291-6	53-20-00-13	-082	01	6710362-5	52-40-49-01	-001	02
6710291-60	53-20-00-13	-017	01	6710363-7	52-40-51-01	-012	06
6710291-61	53-20-00-13	-023	01	6710364-3	53-50-00-02	-103	01
6710291-62	53-20-00-13	-076	01	6710364-4	53-50-00-02	-104	01
6710291-63	53-20-00-13	-084	01	6710365-2	53-50-00-02	-185	01
6710291-64	53-20-00-13	-026	01	6710365-3	53-50-00-02	-186	01
6710291-7	53-20-00-13	-019	01	6710367-3	53-50-00-02	-164	01
6710291-9	53-20-00-13	-103	01	6710367-4	53-50-00-02	-165	01
6710296-11	53-50-00-01	-150	01	6710368-3	53-50-00-02	-157	01
6710296-12	53-50-00-01	-172	01	6710368-5	52-40-49-01	-007	01
6710296-16	53-50-00-01	-168	01	6710368-6	53-50-00-02	-158	01
6710296-17	53-20-00-07	-034	01	6710369-3	53-50-00-02	-150	01
6710296-18	53-50-00-01	-162	01	6710369-4	53-50-00-02	-151	01
6710296-19	53-50-00-01	-166	01	6710370-10	52-40-51-01	-021	01
6710296-20	53-50-00-01	-167	01	6710370-5	53-30-03-05	-010	01
6710296-22	53-50-00-01	-176	01	6710370-6	53-30-03-05	-012	01
6710296-25	53-50-00-01	-150A	01	6710370-7	52-40-51-01	-026	01
6710296-26	53-50-00-01	-167A	01	6710370-8	52-40-51-01	-027	01
6710296-27	53-50-00-01	-166A	01	6710370-9	52-40-51-01	-020	01
6710296-5	53-50-00-01	-170	01	6710372-3	53-50-00-03	-008	01
6710296-9	53-50-00-01	-163	01	6710372-4	53-50-00-03	-009	01
6710306-1	53-50-00-01	-005	01	6710372-5	53-50-00-03	-008A	01
6710306-2	53-50-00-01	-006	01	6710372-6	53-50-00-03	-009A	01
6710306-3	53-50-00-01	-005A	01	6710373-1	53-50-00-03	-015	01
6710306-4	53-50-00-01	-006A	01	6710373-10	53-30-03-05	-019	01
6710311-1	53-50-00-01	-012	01	6710373-2	53-30-03-05	-026	01
6710311-2	53-50-00-01	-013	01	6710373-3	53-50-00-03	-013	01
6710311-9	53-50-00-01	-009	01	6710373-4	53-50-00-03	-014	01
6710316-1	53-50-00-01	-075	01	6710373-5	53-30-03-05	-020	01
6710316-16	53-30-00-01	-003	01	6710373-6	53-30-03-05	-021	01
6710316-18	53-30-00-01	-001	01	6710373-7	53-30-03-05	-016	01
6710316-2	53-50-00-01	-076	01	6710373-8	53-30-03-05	-017	01
6710316-3	53-50-00-01	-018	01	6710373-9	53-30-03-05	-018	01
6710321-1	53-50-00-01	-094	01	6710375-3	53-30-03-05	-001	01
6710321-10	53-50-00-01	-090	01	6710375-4	53-30-03-05	-002	01
6710321-11	53-50-00-01	-091	01	6710376-3	52-40-11-01	-001	01
6710321-2	53-50-00-01	-097	01	6710376-4	52-40-11-01	-002	01
6710321-3	53-50-00-01	-087	01	6710390-2	31-20-00-01	-003	01
6710321-8	53-50-00-01	-093	01	6710390-3	31-20-00-01	-006	02
6710321-9	53-50-00-01	-092	01	6710390-4	31-20-00-01	-005	01

© Cessna Aircraft Company

PART NUMBER	CH SEC SUBJ FIG	ITEM	REQ	PART NUMBER	CH SEC SUBJ FIG	ITEM	REQ
6710394-1	52-40-01-01	-006	01	6711010-24	53-20-01-01	-100	01
6711001-11	53-40-00-02	-007	01	6711010-25	53-20-01-01	-101	01
6711001-13	53-40-00-02	-008	01	6711010-26	53-20-01-01	-102	01
6711001-24	53-40-00-02	-031	02	6711010-29	53-20-01-01	-087	01
6711001-26	53-40-00-02	-033	04	6711010-3	53-20-01-01	-075	01
6711001-27	53-40-00-02	-021	03	6711010-34	53-20-01-01	-088	01
6711001-29	53-40-00-02	-022	03	6711010-4	53-20-01-01	-076	01
6711001-3	53-40-00-02	-003	01	6711010-5	53-20-01-01	-077	01
6711001-35	53-40-00-02	-025	01	6711010-6	53-20-01-01	-078	01
6711001-38	53-40-00-02	-045	01	6711010-7	53-20-01-01	-079	01
6711001-39	53-40-00-02	-010	01	6711010-8	53-20-01-01	-080	01
6711001-4	53-40-00-02	-001	02	6711010-9	53-20-01-01	-081	01
6711001-40	53-40-00-02	-046	01	6711024-10	53-24-00-01	-021	10
6711001-41	53-40-00-02	-009	01	6711024-11	53-24-00-01	-017	01
6711001-43	53-40-00-02	-012	01	6711024-12	53-24-00-01	-018	01
6711001-45	53-40-00-02	-011	01	6711024-13	53-24-00-01	-011	01
6711001-47	53-40-00-02	-014	01	6711024-14	53-24-00-01	-012	01
6711001-49	53-40-00-02	-013	01	6711024-15	53-24-00-01	-009	01
6711001-5	53-40-00-02	-004	01	6711024-16	53-24-00-01	-010	01
6711001-50	53-40-00-02	-039	01	6711024-17	53-24-00-01	-038	01
6711001-51	53-40-00-02	-015	01	6711024-9	53-24-00-01	-020	02
6711001-52	53-40-00-02	-040	01	6711027-11	53-24-00-01	-019	01
6711001-53	53-40-00-02	-016	01	6711027-20	53-24-00-01	-036	01
6711001-54	53-40-00-02	-037	01	6711027-26	53-24-00-01	-039	01
6711001-55	53-40-00-02	-017	01	6711027-30	53-24-00-01	-041	01
6711001-56	53-40-00-02	-038	01	6711027-32	53-24-00-01	-040	01
6711001-57	53-40-00-02	-018	01	6711028-101	53-20-02-08	-009	01
6711001-59	53-40-00-02	-020	01	6711028-105	53-20-02-08	-004	01
6711001-6	53-40-00-02	-002	03	6711028-107	53-20-02-08	-007	01
6711001-61	53-40-00-02	-019	01	6711028-107	53-20-02-08	-017	01
6711001-63	53-40-00-02	-026	01	6711028-108	53-20-02-08	-006	01
6711001-64	53-40-00-02	-027	01	6711028-108	53-20-02-08	-018	01
6711001-65	53-40-00-02	-023	01	6711028-109	53-20-02-08	-005	01
6711001-66	53-40-00-02	-028	01	6711028-11	53-20-02-05	-003	01
6711001-67	53-40-00-02	-024	01	6711028-110	53-20-02-08	-016	01
6711001-70	53-40-00-02	-029	01	6711028-111	53-20-02-06	-020	01
6711001-71	53-40-00-02	-032	02	6711028-111	53-20-02-07	-017	01
6711001-72	53-40-00-02	-034	02	6711028-111	53-20-02-08	-014	01
6711001-73	53-40-00-02	-030	01	6711028-113	53-20-02-08	-003	01
6711001-74	53-40-00-02	-005	01	6711028-114	53-20-02-08	-013	01
6711001-76	53-40-00-02	-043	01	6711028-115	53-20-02-09	-001	01
6711001-78	53-40-00-02	-044	01	6711028-116	53-20-02-09	-002	01
6711001-8	53-40-00-02	-047	01	6711028-117	53-20-02-09	-005	01
6711001-80	53-40-00-02	-041	01	6711028-118	53-20-02-09	-006	01
6711001-82	53-40-00-02	-042	01	6711028-119	53-20-02-09	-003	01
6711001-9	53-40-00-02	-006	01	6711028-120	53-20-02-09	-004	01
6711004-2	53-40-00-01	-002	06	6711028-126	53-20-02-08	-011	01
6711004-3	53-40-00-01	-003	12	6711028-13	53-20-02-05	-002	01
6711010-10	53-20-01-01	-082	01	6711028-131	53-20-02-08	-002	01
6711010-11	53-20-01-01	-083	01	6711028-133	53-20-02-06	-003	01
6711010-12	53-20-01-01	-084	01	6711028-135	53-20-02-09	-007	01
6711010-13	53-20-01-01	-085	01	6711028-136	53-20-02-09	-008	01
6711010-14	53-20-01-01	-086	01	6711028-17	53-20-02-05	-006	01
6711010-15	53-20-01-01	-091	01	6711028-19	53-20-02-05	-012	01
6711010-16	53-20-01-01	-092	01	6711028-20	53-20-02-05	-011	01
6711010-17	53-20-01-01	-093	01	6711028-21	53-20-02-05	-013	01
6711010-18	53-20-01-01	-094	01	6711028-23	53-20-02-05	-010	01
6711010-19	53-20-01-01	-095	01	6711028-25	53-20-02-05	-009	01
6711010-20	53-20-01-01	-096	01	6711028-27	53-20-02-05	-008	01
6711010-21	53-20-01-01	-097	01	6711028-29	53-20-02-05	-007	01
6711010-22	53-20-01-01	-098	01	6711028-31	53-20-02-05	-005	01
6711010-23	53-20-01-01	-099	01	6711028-35	53-20-02-05	-004	01

© Cessna Aircraft Company

PART NUMBER	CH SEC SUBJ FIG	ITEM	REQ	PART NUMBER	CH SEC SUBJ FIG	ITEM	REQ
6711028-38	53-20-02-06	-016	01	6711029-21	53-30-04-02	-011	01
6711028-41	53-20-02-06	-001	01	6711029-22	53-20-01-02	-028	01
6711028-42	53-20-02-06	-014	01	6711029-22	53-30-04-02	-012	01
6711028-43	53-20-02-06	-017	01	6711029-23	53-20-01-02	-005	01
6711028-45	53-20-02-06	-013	01	6711029-23	53-30-04-02	-033	01
6711028-45	53-20-02-06	-029	01	6711029-24	53-20-01-02	-006	01
6711028-46	53-20-02-06	-028	01	6711029-24	53-30-04-02	-034	01
6711028-47	53-20-02-06	-006	01	6711029-25	53-20-01-02	-007	01
6711028-51	53-20-02-06	-010	01	6711029-25	53-30-04-02	-029	01
6711028-52	53-20-02-06	-025	01	6711029-26	53-20-01-02	-008	01
6711028-53	53-20-02-06	-009	01	6711029-26	53-30-04-02	-030	01
6711028-54	53-20-02-06	-024	01	6711029-29	53-30-04-02	-001	01
6711028-55	53-20-02-06	-008	01	6711029-30	53-30-04-02	-002	01
6711028-56	53-20-02-06	-023	01	6711029-31	53-20-01-02	-009	01
6711028-57	53-20-02-06	-007	01	6711029-31	53-30-04-02	-031	01
6711028-58	53-20-02-06	-022	01	6711029-32	53-20-01-02	-010	01
6711028-59	53-20-02-06	-005	01	6711029-32	53-30-04-02	-032	01
6711028-60	53-20-02-06	-019	01	6711029-33	53-20-01-02	-011	01
6711028-63	53-20-02-06	-004	01	6711029-33	53-30-04-02	-027	01
6711028-64	53-20-02-06	-018	01	6711029-34	53-20-01-02	-012	01
6711028-67	53-20-02-07	-002	01	6711029-34	53-30-04-02	-028	01
6711028-68	53-20-02-07	-013	01	6711029-35	53-20-01-02	-017	01
6711028-71	53-20-02-07	-014	01	6711029-35	53-30-04-02	-021	01
6711028-73	53-20-02-07	-009	01	6711029-36	53-20-01-02	-018	01
6711028-74	53-20-02-07	-010	01	6711029-36	53-30-04-02	-022	01
6711028-75	53-20-02-06	-012	01	6711029-37	53-20-01-02	-019	01
6711028-75	53-20-02-07	-008	01	6711029-37	53-30-04-02	-019	01
6711028-76	53-20-02-06	-027	01	6711029-38	53-20-01-02	-020	01
6711028-76	53-20-02-07	-022	01	6711029-38	53-30-04-02	-020	01
6711028-79	53-20-02-07	-024	01	6711029-7	53-20-01-02	-013	01
6711028-79	53-20-02-08	-019	01	6711029-7	53-30-04-02	-025	01
6711028-80	53-20-02-07	-023	01	6711029-8	53-20-01-02	-014	01
6711028-80	53-20-02-08	-020	01	6711029-8	53-30-04-02	-026	01
6711028-81	53-20-02-07	-011	01	6711029-9	53-20-01-02	-015	01
6711028-82	53-20-02-06	-021	01	6711029-9	53-30-04-02	-023	01
6711028-82	53-20-02-07	-018	01	6711030-10	53-20-01-04	-006	01
6711028-82	53-20-02-08	-015	01	6711030-10	53-30-04-01	-005	01
6711028-83	53-20-02-07	-006	01	6711030-101	53-20-01-05	-017	01
6711028-84	53-20-02-07	-020	01	6711030-101	53-30-04-01	-118	01
6711028-85	53-20-02-07	-005	01	6711030-102	53-20-01-05	-018	01
6711028-86	53-20-02-07	-019	01	6711030-102	53-30-04-01	-089	01
6711028-87	53-20-02-07	-004	01	6711030-103	53-20-01-05	-019	01
6711028-88	53-20-02-07	-016	01	6711030-103	53-30-04-01	-117	01
6711028-89	53-20-02-07	-003	01	6711030-104	53-20-01-05	-020	01
6711028-90	53-20-02-07	-015	01	6711030-104	53-30-04-01	-088	01
6711028-97	53-20-02-08	-012	01	6711030-17	53-30-04-01	-079	01
6711028-99	53-20-02-08	-008	01	6711030-29	53-20-01-04	-007	01
6711029-10	53-20-01-02	-016	01	6711030-29	53-30-04-01	-008	01
6711029-10	53-30-04-02	-024	01	6711030-30	53-20-01-04	-008	01
6711029-15	53-20-01-02	-021	01	6711030-30	53-30-04-01	-002	01
6711029-15	53-30-04-02	-017	01	6711030-41	53-20-01-05	-004	01
6711029-16	53-20-01-02	-022	01	6711030-41	53-30-04-01	-106	01
6711029-16	53-30-04-02	-018	01	6711030-42	53-20-01-05	-005	01
6711029-17	53-20-01-02	-023	01	6711030-42	53-30-04-01	-078	01
6711029-17	53-30-04-02	-015	01	6711030-43	53-20-01-05	-003	01
6711029-18	53-20-01-02	-024	01	6711030-43	53-30-04-01	-104	01
6711029-18	53-30-04-02	-016	01	6711030-45	53-20-01-04	-011	01
6711029-19	53-20-01-02	-025	01	6711030-45	53-30-04-01	-007	01
6711029-19	53-30-04-02	-013	01	6711030-47	53-20-01-05	-009	01
6711029-20	53-20-01-02	-026	01	6711030-47	53-30-04-01	-122	01
6711029-20	53-30-04-02	-014	01	6711030-48	53-20-01-05	-010	01
6711029-21	53-20-01-02	-027	01	6711030-48	53-30-04-01	-093	01

© Cessna Aircraft Company

PART NUMBER	CH SEC SUBJ FIG	ITEM	REQ	PART NUMBER	CH SEC SUBJ FIG	ITEM	REQ
6711030-5	53-20-01-04	-001	01	6711031-11	53-30-04-01	-127	01
6711030-5	53-30-04-01	-009	01	6711031-12	53-20-01-05	-046	01
6711030-6	53-20-01-04	-002	01	6711031-12	53-30-04-01	-095	01
6711030-6	53-30-04-01	-003	01	6711031-19	53-20-01-03	-039	01
6711030-61	53-20-01-05	-011	01	6711031-21	53-20-01-03	-037	01
6711030-61	53-30-04-01	-121	01	6711031-22	53-20-01-03	-038	01
6711030-62	53-20-01-05	-012	01	6711031-23	53-20-01-03	-035	01
6711030-62	53-30-04-01	-092	01	6711031-24	53-20-01-03	-036	01
6711030-63	53-20-01-05	-013	01	6711031-25	53-20-01-03	-033	01
6711030-63	53-30-04-01	-120	01	6711031-26	53-20-01-03	-034	01
6711030-64	53-20-01-05	-014	01	6711031-27	53-20-01-03	-031	01
6711030-64	53-30-04-01	-091	01	6711031-28	53-20-01-03	-032	01
6711030-65	53-20-01-05	-015	01	6711031-29	53-20-01-03	-029	01
6711030-65	53-30-04-01	-119	01	6711031-3	53-20-01-05	-047	01
6711030-66	53-20-01-05	-016	01	6711031-3	53-30-04-01	-099	01
6711030-66	53-30-04-01	-090	01	6711031-30	53-20-01-03	-030	01
6711030-7	53-20-01-04	-003	01	6711031-31	53-20-01-03	-027	01
6711030-7	53-30-04-01	-010	01	6711031-32	53-20-01-03	-028	01
6711030-71	53-20-01-05	-021	01	6711031-33	53-20-01-03	-049	01
6711030-71	53-30-04-01	-116	01	6711031-34	53-20-01-05	-042	01
6711030-72	53-20-01-05	-022	01	6711031-34	53-30-04-01	-097	01
6711030-72	53-30-04-01	-085	01	6711031-35	53-20-01-02	-029	01
6711030-73	53-20-01-05	-023	01	6711031-35	53-30-04-02	-009	01
6711030-73	53-30-04-01	-114	01	6711031-36	53-20-01-02	-030	01
6711030-74	53-20-01-05	-024	01	6711031-36	53-30-04-02	-010	01
6711030-74	53-30-04-01	-087	01	6711031-37	53-20-01-02	-031	01
6711030-75	53-20-01-05	-025	01	6711031-37	53-30-04-02	-007	01
6711030-75	53-30-04-01	-102	01	6711031-38	53-20-01-02	-032	01
6711030-76	53-20-01-05	-026	01	6711031-38	53-30-04-02	-008	01
6711030-76	53-30-04-01	-100	01	6711031-39	53-20-01-02	-033	01
6711030-77	53-20-01-05	-027	01	6711031-39	53-30-04-02	-005	01
6711030-77	53-30-04-01	-115	01	6711031-40	53-20-01-02	-034	01
6711030-78	53-20-01-05	-028	01	6711031-40	53-30-04-02	-006	01
6711030-78	53-30-04-01	-084	01	6711031-41	53-20-01-02	-035	01
6711030-79	53-20-01-05	-029	01	6711031-41	53-30-04-02	-003	01
6711030-79	53-30-04-01	-113	01	6711031-42	53-20-01-02	-036	01
6711030-8	53-20-01-04	-004	01	6711031-42	53-30-04-02	-004	01
6711030-8	53-30-04-01	-004	01	6711031-43	53-20-01-03	-043	01
6711030-80	53-20-01-05	-030	01	6711031-44	53-20-01-03	-044	01
6711030-80	53-30-04-01	-086	01	6711031-45	53-20-01-03	-041	01
6711030-81	53-20-01-05	-031	01	6711031-46	53-20-01-03	-042	01
6711030-81	53-30-04-01	-103	01	6711031-47	53-20-01-05	-041	01
6711030-82	53-20-01-05	-032	01	6711031-47	53-30-04-01	-125	01
6711030-82	53-30-04-01	-101	01	6711031-49	53-20-01-05	-007	01
6711030-87	53-20-01-05	-035	01	6711031-49	53-30-04-01	-124	01
6711030-87	53-30-04-01	-108	01	6711031-51	53-20-01-03	-045	01
6711030-88	53-20-01-05	-036	01	6711031-52	53-20-01-03	-046	01
6711030-88	53-30-04-01	-082	01	6711031-56	53-20-01-03	-040	01
6711030-9	53-20-01-04	-005	01	6711031-6	53-20-01-05	-008	01
6711030-9	53-30-04-01	-011	01	6711031-6	53-30-04-01	-098	01
6711030-93	53-20-01-05	-039	01	6711031-9	53-20-01-05	-043	01
6711030-93	53-30-04-01	-107	01	6711031-9	53-30-04-01	-126	01
6711030-94	53-20-01-05	-040	01	6711032-10	53-20-01-05	-002	01
6711030-94	53-30-04-01	-081	01	6711032-10	53-30-04-01	-076	01
6711030-96	53-20-01-05	-037	01	6711032-15	53-20-01-05	-006	01
6711030-96	53-30-04-01	-110	01	6711032-15	53-30-04-01	-083	01
6711030-99	53-20-01-04	-010	01	6711032-17	53-20-01-02	-001	01
6711030-99	53-30-04-01	-006	01	6711032-17	53-30-04-02	-035	01
6711031-1	53-20-01-01	-006	01	6711032-18	53-20-01-02	-002	01
6711031-10	53-20-01-05	-044	01	6711032-18	53-30-04-02	-036	01
6711031-10	53-30-04-01	-096	01	6711032-19	53-20-01-02	-003	01
6711031-11	53-20-01-05	-045	01	6711032-19	53-30-04-02	-037	01

© Cessna Aircraft Company

PART NUMBER	CH SEC SUBJ FIG	ITEM	REQ
6711032-20	53-20-01-02	-004	01
6711032-20	53-30-04-02	-038	01
6711032-21	53-20-01-03	-011	01
6711032-22	53-20-01-03	-012	01
6711032-24	53-20-01-03	-016	01
6711032-29	53-20-01-03	-017	01
6711032-30	53-20-01-03	-018	01
6711032-31	53-20-01-03	-013	01
6711032-32	53-20-01-03	-014	01
6711032-33	53-20-01-03	-015	01
6711032-7	53-20-01-05	-051	01
6711032-7	53-30-04-01	-123	01
6711032-8	53-20-01-05	-052	01
6711032-8	53-30-04-01	-094	01
6711032-9	53-20-01-05	-001	01
6711032-9	53-30-04-01	-105	01
6711033-10	53-20-01-03	-024	01
6711033-11	53-20-01-03	-025	01
6711033-12	53-20-01-03	-026	01
6711033-13	53-20-01-03	-048	01
6711033-14	53-20-01-03	-047	01
6711033-16	53-20-01-03	-001	01
6711033-21	53-20-01-03	-009	01
6711033-22	53-20-01-03	-010	01
6711033-23	53-20-01-03	-021	01
6711033-24	53-20-01-03	-022	01
6711033-25	53-20-01-03	-006	01
6711033-26	53-20-01-03	-007	01
6711033-27	53-20-01-03	-004	01
6711033-28	53-20-01-03	-005	01
6711033-29	53-20-01-03	-019	01
6711033-30	53-20-01-03	-020	01
6711033-32	53-20-01-03	-002	01
6711033-5	53-20-01-03	-050	01
6711033-6	53-20-01-03	-051	01
6711033-7	53-20-01-03	-052	01
6711033-8	53-20-01-03	-053	01
6711033-9	53-20-01-03	-023	01
6711037-45	53-24-00-01	-013	01
6711039-23	53-30-01-01	-006	01
6711039-25	53-30-01-01	-007	01
6711041-10	53-30-04-01	-075	01
6711041-3	53-20-01-05	-048	01
6711041-3	53-30-04-01	-112	01
6711041-5	53-20-01-05	-049	01
6711041-5	53-30-04-01	-077	01
6711041-6	53-20-01-05	-050	01
6711041-6	53-30-04-01	-111	01
6711041-7	53-20-01-05	-033	01
6711041-7	53-30-04-01	-109	01
6711043-116	53-20-05-01	-017	01
6711043-160	53-20-05-01	-006	01
6711043-162	53-20-05-01	-010	01
6711043-175	53-20-05-01	-028	01
6711043-183	53-20-05-01	-015	01
6711043-189	53-20-05-01	-019	01
6711043-190	53-20-05-01	-016	01
6711044-15	53-20-03-02	-018	01
6711044-16	53-20-03-02	-019	01
6711050-3	53-45-00-01	-004	02
6711050-5	53-45-00-01	-003	01
6711051-17	53-22-00-09	-001	02
6711051-19	53-22-00-10	-001	01
6711051-23	53-22-00-09	-006	01
6711051-23	53-22-00-10	-005	01
6711051-24	53-22-00-09	-005	01
6711051-24	53-22-00-10	-006	01
6711052-11	53-45-00-01	-002	01
6711052-13	53-45-00-01	-001	02
6711052-23	53-22-00-05	-082	01
6711052-25	53-22-00-06	-006	01
6711052-29	53-22-00-05	-085	01
6711052-29	53-22-00-06	-002	01
6711052-30	53-22-00-05	-086	01
6711052-30	53-22-00-06	-001	01
6711056-11	53-20-05-01	-025	01
6711056-12	53-20-05-01	-026	01
6711056-51	53-20-05-01	-023	01
6711056-64	53-20-05-01	-029	01
6711056-65	53-20-03-04	-008	01
6711056-69	53-20-05-01	-001	01
6711056-70	53-20-05-01	-002	01
6711057-11	53-20-02-08	-010	01
6711057-12	53-20-02-06	-011	01
6711057-12	53-20-02-07	-007	01
6711057-13	53-20-02-06	-026	01
6711057-13	53-20-02-07	-021	01
6711057-14	53-20-02-07	-012	01
6711057-19	53-20-02-07	-025	01
6711057-21	53-20-02-07	-028	01
6711057-5	53-20-02-08	-001	01
6711057-7	53-20-02-07	-001	01
6711057-9	53-20-02-05	-001	01
6711058-3	53-22-00-02	-079	01
6711059-1	53-30-04-01	-001	01
6711060-10	53-12-00-02	-007	01
6711060-11	53-12-00-02	-078	01
6711060-12	53-12-00-02	-077	02
6711060-13	53-12-00-02	-004	01
6711060-14	53-12-00-02	-005	01
6711060-15	53-12-00-02	-001	01
6711060-16	53-12-00-02	-002	01
6711060-18	53-12-00-01	-002	03
6711060-19	53-12-00-02	-003	01
6711060-20	53-12-00-02	-080	04
6711060-21	53-12-00-02	-013	01
6711060-22	53-12-00-02	-079	01
6711060-26	53-12-00-02	-010	01
6711060-31	53-12-00-02	-026	01
6711060-32	53-12-00-02	-028	01
6711060-33	53-12-00-02	-008	01
6711060-4	53-12-00-02	-012	01
6711060-43	53-12-00-02	-081	01
6711060-44	53-12-00-02	-086	01
6711060-45	53-12-00-01	-003	01
6711060-46	53-12-00-01	-004	01
6711060-49	53-12-00-02	-014	01
6711060-9	53-12-00-02	-006	01
6711061-11	53-20-00-06	-117	04
6711061-12	53-20-00-06	-116	04
6711061-13	53-20-00-06	-075	01
6711061-14	53-20-00-06	-076	01
6711061-19	53-20-00-06	-079	01
6711061-20	53-20-00-06	-093	01

© Cessna Aircraft Company

PART NUMBER	CH SEC SUBJ FIG	ITEM	REQ	PART NUMBER	CH SEC SUBJ FIG	ITEM	REQ
6711061-21	53-20-00-06	-094	01	6711085-9	53-12-15-01	-079	01
6711061-23	53-20-00-06	-115	04	6711086-11	53-12-15-01	-180	02
6711061-24	53-20-00-06	-114	04	6711086-12	53-12-15-01	-177	02
6711061-25	53-20-00-06	-110	01	6711086-13	53-12-15-01	-179	02
6711061-26	53-20-00-06	-081	01	6711086-14	53-12-15-01	-178	02
6711061-27	53-20-00-06	-080	01	6711086-17	53-12-15-01	-181	02
6711061-28	53-20-00-06	-078	01	6711086-18	53-12-15-01	-173	02
6711061-3	53-20-00-06	-108	01	6711086-19	53-12-15-01	-176	01
6711061-4	53-20-00-06	-121	01	6711086-20	53-12-15-01	-175	01
6711061-5	53-20-00-06	-077	01	6711086-21	53-12-15-01	-174	01
6711061-7	53-20-00-06	-111	01	6711086-24	53-12-15-01	-167	01
6711061-7	53-20-00-06	-113	01	6711086-27	53-12-15-01	-171	NP
6711063-2	53-22-00-20	-003	01	6711086-29	53-12-15-01	-169	NP
6711063-3	53-22-00-20	-002	01	6711086-42	53-12-15-01	-183	01
6711063-4	53-22-00-20	-008	01	6711086-43	53-12-15-01	-185	01
6711070-4	53-30-01-01	-004	01	6711086-44	53-12-15-01	-184	01
6711070-6	53-30-01-01	-001	01	6711086-48	53-12-15-01	-172	01
6711075-29	53-24-00-01	-027	01	6711086-49	53-12-15-01	-170	01
6711075-30	53-24-00-01	-028	01	6711086-51	53-12-15-01	-165	01
6711080-10	53-12-15-01	-009	01	6711086-9	53-12-15-01	-186	02
6711080-11	53-12-15-01	-020	04	6711087-100	53-20-00-01	-002	01
6711080-12	53-12-15-01	-007	02	6711087-101	53-20-00-01	-020	01
6711080-13	53-12-15-01	-012	01	6711087-102	53-20-00-01	-158	01
6711080-14	53-12-15-01	-011	01	6711087-105	53-20-00-01	-028	01
6711080-15	53-12-15-01	-022	01	6711087-106	53-20-00-01	-166	01
6711080-16	53-12-15-01	-014	01	6711087-109	53-20-00-02	-045	02
6711080-17	53-12-15-01	-019	01	6711087-115	53-20-00-01	-085	01
6711080-18	53-12-15-01	-015	01	6711087-116	53-20-00-01	-083	01
6711080-19	53-12-15-01	-016	01	6711087-117	53-20-00-01	-084	01
6711080-20	53-12-15-01	-010	04	6711087-123	53-20-00-01	-030	01
6711080-23	53-12-15-01	-003	02	6711087-124	53-20-00-01	-168	01
6711080-24	53-12-15-01	-006	02	6711087-125	53-20-00-01	-032	03
6711080-25	53-12-15-01	-001	02	6711087-126	53-20-00-01	-170	03
6711080-26	53-12-15-01	-008	02	6711087-127	53-20-00-01	-034	01
6711080-3	52-10-00-01	-018	01	6711087-128	53-20-00-01	-172	01
6711080-3	53-12-15-01	-018	01	6711087-129	53-20-00-01	-029	01
6711080-4	52-10-00-01	-019	01	6711087-130	53-20-00-01	-167	01
6711080-4	53-12-15-01	-017	01	6711087-131	53-20-00-01	-031	03
6711080-5	52-10-00-01	-017	01	6711087-132	53-20-00-01	-169	03
6711080-5	53-12-15-01	-021	01	6711087-133	53-20-00-01	-033	01
6711080-6	52-10-00-01	-020	01	6711087-134	53-20-00-01	-171	01
6711080-6	53-12-15-01	-013	01	6711087-135	53-20-00-01	-075	01
6711080-7	53-12-15-01	-004	02	6711087-136	53-20-00-01	-178	01
6711080-8	53-12-15-01	-005	02	6711087-139	53-20-00-01	-079	01
6711080-9	53-12-15-01	-002	01	6711087-140	53-20-00-01	-182	01
6711084-11	53-12-15-01	-093	01	6711087-141	53-20-00-01	-076	01
6711084-13	53-12-15-01	-094	02	6711087-142	53-20-00-01	-179	01
6711084-15	53-12-15-01	-095	02	6711087-145	53-20-00-01	-080	01
6711084-17	53-12-15-01	-090	01	6711087-147	53-20-00-02	-035	01
6711084-40	53-12-15-01	-097	01	6711087-148	53-20-00-02	-037	01
6711084-42	53-12-15-01	-096	02	6711087-149	53-20-00-01	-021	01
6711084-5	53-12-15-01	-089	01	6711087-150	53-20-00-01	-159	01
6711084-7	53-12-15-01	-091	01	6711087-151	53-20-00-01	-022	01
6711084-9	53-12-15-01	-092	01	6711087-152	53-20-00-01	-160	01
6711085-10	53-12-15-01	-077	01	6711087-153	53-20-00-01	-004	01
6711085-11	53-12-15-01	-080	01	6711087-154	53-20-00-01	-151	01
6711085-13	53-12-15-01	-078	01	6711087-155	53-20-00-01	-003	01
6711085-23	53-12-15-01	-076	01	6711087-156	53-20-00-01	-150	01
6711085-26	53-12-15-01	-082	01	6711087-157	53-20-00-01	-017	01
6711085-3	53-12-15-01	-075	01	6711087-157	53-20-00-01	-156	01
6711085-4	53-12-15-01	-98	01	6711087-158	53-20-00-01	-018	01
6711085-7	53-12-15-01	-084	02	6711087-158	53-20-00-01	-155	01

© Cessna Aircraft Company

PART NUMBER	CH SEC SUBJ FIG	ITEM	REQ
6711087-159	53-20-00-01	-019	01
6711087-160	53-20-00-01	-157	01
6711087-161	53-20-00-01	-027	01
6711087-162	53-20-00-01	-165	01
6711087-163	53-20-00-02	-022	01
6711087-164	53-20-00-02	-021	01
6711087-175	53-20-00-01	-040	01
6711087-176	53-20-00-01	-186	01
6711087-177	53-20-00-01	-077	01
6711087-178	53-20-00-01	-180	01
6711087-179	53-20-00-01	-078	01
6711087-180	53-20-00-01	-181	01
6711087-182	53-20-00-01	-183	01
6711087-183	53-20-00-02	-038	01
6711087-184	53-20-00-02	-039	01
6711087-185	53-20-00-02	-040	02
6711087-186	53-20-00-02	-031	04
6711087-187	53-20-00-02	-029	01
6711087-188	53-20-00-02	-033	01
6711087-189	53-20-00-02	-030	01
6711087-190	53-20-00-02	-034	01
6711087-191	53-20-00-02	-032	02
6711087-28	53-20-00-01	-086	01
6711087-31	53-20-00-01	-095	01
6711087-32	53-20-00-01	-097	01
6711087-39	53-20-00-01	-099	01
6711087-40	53-20-00-01	-100	01
6711087-45	53-20-00-01	-101	01
6711087-46	53-20-00-01	-102	01
6711087-47	53-20-00-01	-103	02
6711087-48	53-20-00-01	-104	02
6711087-49	53-20-00-01	-105	02
6711087-50	53-20-00-02	-025	02
6711087-51	53-20-00-01	-089	01
6711087-52	53-20-00-01	-090	01
6711087-57	53-20-00-02	-019	01
6711087-58	53-20-00-02	-020	01
6711087-59	53-20-00-02	-017	01
6711087-60	53-20-00-02	-018	01
6711087-63	53-20-00-02	-026	01
6711087-64	53-20-00-02	-028	01
6711087-65	53-20-00-02	-027	01
6711087-68	53-20-00-02	-036	01
6711087-74	53-20-00-02	-041	01
6711087-77	53-20-00-02	-011	01
6711087-83	53-20-00-01	-036	01
6711087-84	53-20-00-01	-174	01
6711087-85	53-20-00-01	-035	01
6711087-86	53-20-00-01	-173	01
6711090-10	53-20-00-03	-017	01
6711090-13	53-20-00-03	-003	01
6711090-14	53-20-00-03	-004	01
6711090-15	53-20-00-03	-005	01
6711090-16	53-20-00-03	-006	01
6711090-18	53-20-00-03	-022	01
6711090-21	53-20-00-03	-018	01
6711090-22	53-20-00-03	-019	01
6711090-9	53-20-00-03	-016	01
6711091-10	53-20-00-04	-039	01
6711091-11	53-20-00-04	-037	01
6711091-12	53-20-00-04	-038	01
6711091-13	53-20-00-04	-077	01

PART NUMBER	CH SEC SUBJ FIG	ITEM	REQ
6711091-14	53-20-00-04	-078	01
6711091-15	53-20-00-04	-044	01
6711091-16	53-20-00-04	-045	01
6711091-17	53-20-00-04	-046	01
6711091-18	53-20-00-04	-047	01
6711091-19	53-20-00-04	-081	01
6711091-2	53-20-00-04	-083	01
6711091-20	53-20-00-04	-082	01
6711091-21	53-20-00-04	-075	01
6711091-22	53-20-00-04	-076	01
6711091-24	53-20-00-04	-051	01
6711091-26	53-20-00-04	-085	01
6711091-27	53-20-00-04	-041	01
6711091-28	53-20-00-04	-042	01
6711091-29	53-20-00-04	-003	01
6711091-30	53-20-00-04	-004	01
6711091-31	53-20-00-04	-043	01
6711091-33	53-20-00-04	-019	01
6711091-33	53-20-00-05	-018	01
6711091-34	53-20-00-04	-020	01
6711091-34	53-20-00-05	-019	01
6711091-35	53-20-00-04	-021	01
6711091-35	53-20-00-05	-020	01
6711091-36	53-20-00-04	-022	01
6711091-36	53-20-00-05	-021	01
6711091-37	53-20-00-04	-027	01
6711091-37	53-20-00-05	-026	01
6711091-38	53-20-00-04	-028	01
6711091-38	53-20-00-05	-027	01
6711091-39	53-20-00-04	-029	01
6711091-39	53-20-00-05	-028	01
6711091-40	53-20-00-04	-030	01
6711091-40	53-20-00-05	-029	01
6711091-41	53-20-00-04	-017	01
6711091-42	53-20-00-04	-018	01
6711091-43	53-20-00-04	-009	01
6711091-44	53-20-00-04	-010	01
6711091-5	53-20-00-04	-015	01
6711091-59	53-20-00-04	-050	01
6711091-6	53-20-00-04	-016	01
6711091-60	53-20-00-04	-084	01
6711091-61	53-20-00-04	-035	01
6711091-62	53-20-00-04	-036	01
6711091-9	53-20-00-04	-052	01
6711092-10	53-20-00-05	-035	01
6711092-12	53-20-00-05	-037	01
6711092-14	53-20-00-05	-039	01
6711092-15	53-20-00-05	-003	01
6711092-16	53-20-00-05	-004	01
6711092-24	53-20-00-05	-036	01
6711092-25	53-20-00-05	-038	01
6711092-27	53-20-00-03	-009	02
6711092-27	53-20-00-05	-008	02
6711092-9	53-20-00-05	-034	01
6711093-10	53-20-00-06	-004	01
6711093-23	53-20-00-06	-126	01
6711093-24	53-20-00-06	-127	01
6711093-34	53-20-00-06	-103	01
6711093-47	53-20-00-06	-099	01
6711093-51	53-20-00-06	-096	01
6711093-54	53-20-00-06	-109	01
6711093-56	53-20-00-06	-122	01

© Cessna Aircraft Company

PART NUMBER	CH SEC SUBJ FIG	ITEM	REQ	PART NUMBER	CH SEC SUBJ FIG	ITEM	REQ
6711093-57	53-20-00-06	-120	01	6711097-2	53-20-00-10	-003	01
6711093-59	53-20-00-03	-007	02	6711097-25	53-20-00-10	-017	01
6711093-59	53-20-00-05	-016	02	6711097-3	53-20-00-10	-012	01
6711093-59	53-20-00-06	-009	02	6711097-33	53-20-00-10	-016	01
6711093-59	53-20-00-07	-011	02	6711097-33	53-20-00-12	-018	01
6711093-63	53-20-00-06	-017	02	6711097-34	53-20-00-10	-015	01
6711093-64	53-20-00-06	-018	02	6711097-34	53-20-00-12	-019	01
6711093-9	53-20-00-06	-003	01	6711097-35	53-20-00-10	-008	02
6711094-10	53-20-00-07	-004	01	6711097-35	53-20-00-12	-016	02
6711094-11	53-20-00-07	-014	01	6711097-36	53-20-00-10	-009	02
6711094-12	53-20-00-07	-015	01	6711097-36	53-20-00-12	-017	02
6711094-13	53-20-00-07	-016	01	6711097-38	53-20-00-10	-013	01
6711094-14	53-20-00-07	-017	01	6711097-41	53-20-00-10	-005	01
6711094-15	53-20-00-07	-022	01	6711097-42	53-20-00-10	-006	01
6711094-16	53-20-00-07	-023	01	6711097-43	53-20-00-10	-014	01
6711094-17	53-20-00-07	-024	01	6711097-45	53-20-00-10	-023	01
6711094-18	53-20-00-07	-025	01	6711097-47	53-20-00-10	-018	01
6711094-2	53-20-00-07	-013	01	6711097-49	53-20-00-10	-002	01
6711094-9	53-20-00-07	-003	01	6711097-53	53-20-00-10	-025	01
6711095-15	53-20-00-08	-003	02	6711097-55	53-20-00-10	-021	01
6711095-16	53-20-00-08	-004	02	6711097-57	53-20-00-10	-022	01
6711095-17	53-20-00-08	-011	02	6711097-58	53-20-00-10	-019	01
6711095-18	53-20-00-08	-012	02	6711097-62	53-20-00-10	-001	01
6711095-19	53-20-00-08	-045	01	6711097-63	53-20-00-10	-004	01
6711095-20	53-20-00-08	-046	01	6711097-7	53-20-00-10	-024	01
6711095-25	53-20-00-08	-041	01	6711099-37	53-20-00-11	-004	01
6711095-31	53-30-06-03	-002	01	6711099-39	53-20-00-11	-005	01
6711095-32	53-30-06-04	-004	01	6711099-49	53-20-00-11	-011	01
6711095-33	53-20-00-08	-005	01	6711099-50	53-20-00-11	-010	01
6711095-34	53-20-00-08	-006	01	6711099-53	53-20-00-11	-003	01
6711095-35	53-20-00-08	-007	01	6711099-54	53-20-00-11	-002	01
6711095-36	53-20-00-08	-008	01	6711099-55	53-20-00-11	-007	01
6711095-37	53-20-00-08	-001	01	6711099-56	53-20-00-11	-006	01
6711095-38	53-20-00-08	-002	01	6711099-57	53-20-00-11	-009	01
6711095-43	53-20-00-08	-017	04	6711099-58	53-20-00-11	-008	01
6711095-44	53-20-00-08	-018	04	6711100-14	53-22-00-01	-009	01
6711095-46	53-20-00-08	-042	01	6711100-18	53-22-00-01	-016	01
6711095-49	53-20-00-08	-025	01	6711100-20	53-22-00-01	-002	01
6711095-50	53-20-00-08	-028	01	6711100-21	53-22-00-01	-006	01
6711095-51	53-20-00-08	-026	01	6711100-5	53-22-00-01	-001	01
6711095-52	53-20-00-08	-029	01	6711100-7	53-22-00-01	-007	01
6711095-54	53-20-00-08	-016	01	6711100-8	53-22-00-01	-008	01
6711095-55	53-20-00-08	-009	01	6711101-2	53-22-00-01	-081	01
6711095-56	53-20-00-08	-010	01	6711101-7	53-22-00-01	-075	01
6711095-59	53-20-00-08	-015	01	6711101-8	53-22-00-01	-087	01
6711096-10	53-20-00-06	-012	02	6711101-9	53-22-00-01	-076	01
6711096-10	53-20-00-09	-017	02	6711102-10	53-20-00-11	-020	01
6711096-11	53-20-00-09	-028	01	6711102-15	53-20-00-11	-019	01
6711096-15	53-20-00-09	-002	01	6711102-16	53-20-00-11	-027	01
6711096-16	53-20-00-09	-004	01	6711102-35	53-20-00-11	-028	01
6711096-17	53-20-00-09	-003	01	6711102-36	53-20-00-11	-016	01
6711096-18	53-20-00-09	-005	01	6711102-37	53-20-00-11	-030	01
6711096-2	53-20-00-09	-001	01	6711102-41	53-20-00-11	-026	01
6711096-22	53-20-00-09	-012	01	6711102-43	53-20-00-11	-025	01
6711096-28	53-20-00-09	-015	01	6711102-44	53-20-00-11	-023	01
6711096-5	53-20-00-09	-013	01	6711102-45	53-20-00-11	-024	01
6711096-6	53-20-00-09	-014	01	6711102-46	53-20-00-11	-022	01
6711096-9	53-20-00-06	-011	02	6711102-47	53-20-00-11	-018	01
6711096-9	53-20-00-09	-016	02	6711102-48	53-20-00-11	-017	01
6711097-15	53-20-00-10	-020	01	6711103-10	53-20-00-12	-010	01
6711097-17	53-20-00-10	-007	01	6711103-13	53-20-00-12	-021	01
6711097-19	53-20-00-10	-010	01	6711103-19	53-20-00-12	-015	01

© Cessna Aircraft Company

PART NUMBER	CH SEC SUBJ FIG	ITEM	REQ
6711103-21	53-20-00-12	-006	01
6711103-22	53-20-00-12	-007	01
6711103-23	53-20-00-12	-030	01
6711103-24	53-20-00-12	-026	01
6711103-25	53-20-00-12	-025	01
6711103-26	53-20-00-12	-003	01
6711103-27	53-20-00-12	-001	01
6711103-31	53-20-00-12	-004	01
6711103-32	53-20-00-12	-005	01
6711103-33	53-20-00-12	-008	01
6711103-5	53-20-00-12	-012	06
6711103-6	53-20-00-12	-013	07
6711103-9	53-20-00-12	-009	01
6711104-11	53-22-00-02	-012	01
6711104-11	53-22-00-02	-086	01
6711104-7	53-22-00-02	-075	01
6711104-7	53-22-00-03	-001	01
6711104-7	53-22-00-03	-075	01
6711104-7	53-22-00-04	-075	01
6711104-8	53-22-00-02	-076	01
6711104-8	53-22-00-03	-002	01
6711104-8	53-22-00-03	-076	01
6711104-9	53-22-00-02	-003	01
6711104-9	53-22-00-02	-077	01
6711104-9	53-22-00-03	-003	01
6711104-9	53-22-00-03	-077	01
6711104-9	53-22-00-04	-003	01
6711104-9	53-22-00-04	-077	01
6711105-5	53-22-00-03	-006	02
6711105-6	53-22-00-03	-007	02
6711105-8	53-22-00-03	-008	01
6711105-9	53-22-00-03	-009	01
6711108-10	53-22-00-04	-076	01
6711108-5	53-22-00-04	-086	02
6711108-6	53-22-00-04	-087	02
6711108-8	53-22-00-04	-088	01
6711108-9	53-22-00-04	-089	01
6711109-15	53-22-00-05	-011	01
6711109-16	53-22-00-05	-012	01
6711109-7	53-22-00-05	-014	02
6711109-9	53-22-00-05	-013	02
6711110-10	53-22-00-05	-164	02
6711110-13	53-22-00-05	-150	09
6711110-14	53-22-00-05	-151	09
6711110-15	53-22-00-05	-152	09
6711110-16	53-22-00-05	-153	09
6711110-9	53-22-00-05	-163	02
6711111-10	53-22-00-05	-080	02
6711111-10	53-22-00-06	-028	02
6711111-11	53-22-00-06	-026	02
6711111-19	53-22-00-06	-007	09
6711111-2	53-22-00-05	-077	02
6711111-2	53-22-00-06	-025	02
6711111-20	53-22-00-06	-009	09
6711111-21	53-22-00-06	-008	09
6711111-22	53-22-00-06	-010	09
6711111-23	53-22-00-05	-078	02
6711111-24	53-22-00-05	-079	02
6711111-24	53-22-00-06	-029	02
6711111-25	53-22-00-06	-011	01
6711111-26	53-22-00-06	-012	01
6711111-27	53-22-00-06	-013	01
6711111-28	53-22-00-06	-014	01
6711111-3	53-22-00-05	-075	02
6711111-3	53-22-00-06	-023	02
6711111-4	53-22-00-05	-076	02
6711111-4	53-22-00-06	-024	02
6711111-7	53-22-00-05	-081	02
6711111-7	53-22-00-06	-027	02
6711113-2	53-22-00-07	-004	02
6711113-7	53-22-00-07	-014	01
6711113-8	53-22-00-08	-011	01
6711115-2	53-22-00-07	-153	02
6711117-2	53-22-00-08	-078	02
6711117-4	53-22-00-04	-002	01
6711117-4	53-22-00-05	-002	01
6711117-5	53-22-00-04	-001	01
6711117-5	53-22-00-05	-001	01
6711117-6	53-22-00-05	-003	01
6711118-11	53-22-00-05	-093	02
6711118-11	53-22-00-09	-036	02
6711118-13	53-22-00-09	-010	01
6711118-14	53-22-00-09	-012	01
6711118-17	53-22-00-09	-084	03
6711118-18	53-22-00-09	-086	02
6711118-5	53-22-00-09	-023	01
6711118-6	53-22-00-09	-025	01
6711119-10	53-22-00-09	-078	02
6711119-10	53-22-00-10	-022	02
6711119-17	53-22-00-10	-088	01
6711119-18	53-22-00-10	-090	01
6711119-19	53-22-00-09	-024	01
6711119-19	53-22-00-10	-087	01
6711119-2	53-22-00-10	-016	02
6711119-20	53-22-00-09	-022	01
6711119-20	53-22-00-10	-089	01
6711119-21	53-22-00-10	-075	01
6711119-22	53-22-00-10	-078	01
6711119-25	53-22-00-10	-104	01
6711119-25	53-22-00-10	-113	08
6711119-26	53-22-00-10	-106	01
6711119-26	53-22-00-10	-115	08
6711119-27	53-22-00-09	-085	04
6711119-27	53-22-00-10	-103	01
6711119-27	53-22-00-10	-112	08
6711119-28	53-22-00-09	-083	07
6711119-28	53-22-00-10	-105	01
6711119-28	53-22-00-10	-114	08
6711119-29	53-22-00-10	-076	01
6711119-3	53-22-00-10	-010	01
6711119-30	53-22-00-10	-077	01
6711119-4	53-22-00-10	-011	01
6711119-5	53-22-00-09	-081	01
6711119-5	53-22-00-10	-019	01
6711119-6	53-22-00-09	-080	01
6711119-6	53-22-00-10	-020	01
6711119-7	53-22-00-10	-017	01
6711119-8	53-22-00-09	-082	01
6711119-8	53-22-00-10	-018	01
6711119-9	53-22-00-09	-079	02
6711119-9	53-22-00-10	-021	02
6711120-11	53-22-00-18	-006	01
6711120-12	53-22-00-18	-018	01
6711120-13	53-22-00-18	-016	01

© Cessna Aircraft Company

PART NUMBER	CH SEC SUBJ FIG	ITEM	REQ	PART NUMBER	CH SEC SUBJ FIG	ITEM	REQ
6711120-14	53-22-00-18	-015	01	6711127-59	53-24-00-01	-273	01
6711120-15	53-22-00-18	-007	01	6711127-60	53-24-00-01	-274	01
6711120-16	53-22-00-18	-017	01	6711127-63	53-24-00-01	-282	01
6711120-17	53-22-00-18	-004	01	6711127-64	53-24-00-01	-283	01
6711120-17	53-22-00-19	-004	01	6711127-67	53-24-00-01	-306	01
6711120-18	53-22-00-18	-020	01	6711127-68	53-24-00-01	-307	01
6711120-18	53-22-00-19	-020	01	6711127-75	53-24-00-01	-316	01
6711120-31	53-22-00-18	-005	01	6711127-76	53-24-00-01	-317	01
6711120-32	53-22-00-18	-019	01	6711127-78	53-24-00-01	-318	02
6711120-33	53-22-00-18	-008	01	6711127-80	53-24-00-01	-088	01
6711120-35	53-22-00-18	-002	01	6711127-83	53-24-00-01	-099	01
6711120-36	53-22-00-18	-021	01	6711127-85	53-24-00-01	-172	01
6711120-37	53-22-00-18	-003	01	6711127-86	53-24-00-01	-076	02
6711120-38	53-22-00-18	-023	01	6711127-88	53-24-00-01	-103	01
6711120-39	53-22-00-18	-022	01	6711127-89	53-24-00-01	-100	01
6711120-40	53-22-00-18	-024	01	6711127-91	53-24-00-01	-102	01
6711120-42	28-20-00-02	-038	01	6711127-93	53-24-00-01	-101	01
6711120-9	53-22-00-18	-001	01	6711128-4	53-24-00-01	-016	01
6711121-10	53-22-00-19	-016	01	6711131-10	53-21-00-01	-152	32
6711121-11	53-22-00-19	-006	02	6711131-10	53-21-00-02	-002	39
6711121-12	53-22-00-19	-018	01	6711131-11	53-21-00-01	-120	06
6711121-13	53-22-00-19	-007	02	6711131-11	53-21-00-02	-009	10
6711121-14	53-22-00-19	-017	01	6711131-12	53-21-00-01	-044	07
6711121-39	53-22-00-19	-009	01	6711131-12	53-21-00-01	-045	08
6711121-43	53-22-00-19	-001	01	6711131-12	53-21-00-02	-019	07
6711121-44	53-22-00-19	-002	01	6711131-13	53-21-00-01	-004	03
6711121-45	53-22-00-19	-003	01	6711131-14	53-21-00-02	-086	01
6711121-49	53-22-00-19	-005	01	6711131-15	53-21-00-01	-151	01
6711121-50	53-22-00-19	-019	01	6711131-16	53-21-00-02	-025	01
6711121-9	53-22-00-19	-008	01	6711131-18	53-21-00-02	-081	02
6711124-69	53-23-00-03	-010	08	6711131-2	53-21-00-02	-110	01
6711124-73	53-23-00-03	-008	02	6711131-20	53-21-00-02	-103	01
6711126-10	53-24-00-01	-087	01	6711131-24	53-21-00-01	-174	02
6711126-11	53-24-00-01	-156	01	6711131-25	53-21-00-01	-098	01
6711126-12	53-24-00-01	-085	01	6711131-26	53-21-00-02	-080	01
6711126-2	53-24-00-01	-093	03	6711131-28	53-21-00-01	-153	05
6711126-2	53-24-00-01	-176	04	6711131-28	53-21-00-02	-082	06
6711126-3	53-24-00-01	-092	02	6711131-3	53-21-00-01	-038	05
6711126-3	53-24-00-01	-177	01	6711131-33	53-21-00-01	-001	01
6711126-5	53-24-00-01	-163	01	6711131-35	53-21-00-01	-176	01
6711126-6	53-24-00-01	-086	01	6711131-37	53-21-00-01	-177	01
6711126-7	53-24-00-01	-155	01	6711131-39	53-21-00-01	-086	01
6711126-8	53-24-00-01	-084	01	6711131-4	53-21-00-02	-001	06
6711126-9	53-24-00-01	-164	01	6711131-45	53-21-00-01	-150	01
6711127-102	53-24-00-01	-109	01	6711131-46	53-21-00-02	-028	01
6711127-103	53-24-00-01	-108	01	6711131-5	53-21-00-01	-037	05
6711127-17	53-24-00-01	-171	01	6711131-57	53-21-00-01	-104	02
6711127-18	53-24-00-01	-089	01	6711131-58	53-21-00-01	-102	04
6711127-21	53-24-00-01	-096	01	6711131-59	53-21-00-02	-020	08
6711127-22	53-24-00-01	-097	01	6711131-6	53-21-00-02	-006	06
6711127-31	53-24-00-01	-107	01	6711131-60	53-21-00-01	-127	07
6711127-32	53-24-00-01	-106	01	6711131-60	53-21-00-01	-128	06
6711127-39	53-24-00-01	-250	01	6711131-61	53-21-00-01	-129	07
6711127-40	53-24-00-01	-251	01	6711131-61	53-21-00-01	-130	06
6711127-43	53-24-00-01	-254	01	6711131-62	53-21-00-02	-021	08
6711127-44	53-24-00-01	-255	01	6711131-63	53-21-00-01	-157	01
6711127-47	53-24-00-01	-258	01	6711131-65	53-21-00-01	-158	01
6711127-48	53-24-00-01	-259	01	6711131-7	53-21-00-01	-046	07
6711127-51	53-24-00-01	-262	01	6711131-7	53-21-00-01	-047	08
6711127-52	53-24-00-01	-263	01	6711131-7	53-21-00-02	-015	07
6711127-55	53-24-00-01	-266	01	6711131-71	53-21-00-02	-075	02
6711127-56	53-24-00-01	-267	01	6711131-73	53-21-00-01	-173	02

© Cessna Aircraft Company

PART NUMBER	CH SEC SUBJ FIG	ITEM	REQ	PART NUMBER	CH SEC SUBJ FIG	ITEM	REQ
6711131-75	53-21-00-01	-160	02	6711135-79	53-30-06-02	-156	05
6711131-75	53-21-00-02	-096	01	6711135-80	53-30-06-01	-033	04
6711131-76	53-21-00-01	-172	02	6711135-80	53-30-06-02	-155	02
6711131-76	53-21-00-02	-090	01	6711135-81	53-30-06-01	-161	01
6711131-77	53-21-00-01	-159	02	6711135-82	53-30-06-02	-077	01
6711131-77	53-21-00-02	-093	01	6711135-93	53-30-06-01	-001	01
6711131-78	53-21-00-01	-162	02	6711135-93	53-30-06-02	-002	01
6711131-78	53-21-00-02	-097	01	6711135-95	53-30-06-01	-016	01
6711131-79	53-21-00-01	-165	02	6711135-96	53-30-06-02	-150	01
6711131-79	53-21-00-02	-098	01	6711136-3	53-20-05-02	-019	04
6711131-8	53-21-00-01	-126	06	6711136-4	53-20-05-02	-021	04
6711131-8	53-21-00-02	-010	10	6711136-5	53-20-05-02	-020	02
6711131-80	53-21-00-01	-161	02	6711136-6	53-20-05-02	-022	06
6711131-80	53-21-00-02	-094	01	6711138-12	53-22-00-01	-003	01
6711135-118	53-30-06-02	-019	01	6711138-12	53-22-00-01	-077	01
6711135-124	53-30-06-02	-018	01	6711138-12	53-22-00-02	-004	02
6711135-125	53-30-06-01	-158	01	6711138-12	53-22-00-02	-078	02
6711135-129	53-30-06-01	-155	01	6711138-12	53-22-00-03	-004	02
6711135-133	53-30-06-01	-154	01	6711138-12	53-22-00-03	-078	02
6711135-142	53-30-06-02	-009	01	6711138-12	53-22-00-04	-004	02
6711135-157	53-30-06-01	-023	01	6711138-12	53-22-00-04	-078	02
6711135-159	53-30-06-01	-024	01	6711138-12	53-22-00-05	-004	02
6711135-161	53-30-06-01	-021	02	6711138-39	53-22-00-07	-001	01
6711135-161	53-30-06-02	-021	02	6711138-39	53-22-00-07	-075	01
6711135-165	53-30-06-01	-031	01	6711138-39	53-22-00-07	-150	01
6711135-179	53-30-06-01	-171	01	6711138-39	53-22-00-08	-001	01
6711135-18	53-30-06-01	-075	11	6711138-39	53-22-00-08	-075	01
6711135-18	53-30-06-02	-159	13	6711138-40	53-22-00-07	-002	01
6711135-22	53-30-06-01	-096	01	6711138-40	53-22-00-07	-076	01
6711135-22	53-30-06-02	-152	01	6711138-40	53-22-00-07	-151	01
6711135-25	53-30-06-02	-161	01	6711138-40	53-22-00-08	-002	01
6711135-26	53-30-06-01	-162	01	6711138-40	53-22-00-08	-076	01
6711135-27	53-30-06-01	-091	04	6711138-41	53-22-00-03	-016	01
6711135-27	53-30-06-02	-031	03	6711138-41	53-22-00-03	-087	01
6711135-31	53-30-06-02	-164	01	6711138-41	53-22-00-04	-007	01
6711135-32	53-30-06-02	-160	01	6711138-41	53-22-00-04	-090	01
6711135-35	53-30-06-01	-009	01	6711138-41	53-22-00-05	-017	01
6711135-36	53-30-06-02	-007	01	6711138-41	53-22-00-07	-003	01
6711135-44	53-30-06-01	-029	01	6711138-41	53-22-00-07	-077	01
6711135-44	53-30-06-02	-151	01	6711138-41	53-22-00-07	-152	01
6711135-45	53-30-06-01	-078	05	6711138-41	53-22-00-08	-003	01
6711135-51	53-30-06-01	-079	06	6711138-41	53-22-00-08	-077	01
6711135-52	53-30-06-02	-082	07	6711138-41	53-22-00-19	-022	01
6711135-53	53-30-06-01	-036	08	6711138-43	53-22-00-03	-079	01
6711135-53	53-30-06-02	-085	06	6711138-44	53-22-00-03	-080	01
6711135-54	53-30-06-01	-080	05	6711138-45	53-22-00-04	-005	01
6711135-54	53-30-06-02	-098	09	6711138-46	53-22-00-04	-006	01
6711135-55	53-30-06-01	-076	08	6711139-3	56-20-00-01	-001	13
6711135-55	53-30-06-02	-084	06	6711139-4	56-20-00-01	-007	01
6711135-56	53-30-06-01	-081	05	6711139-5	56-20-00-01	-009	01
6711135-56	53-30-06-02	-097	09	6711141-4	53-12-10-01	-007	01
6711135-58	53-30-06-01	-015	01	6711141-5	53-12-10-01	-006	01
6711135-58	53-30-06-02	-013	01	6711141-8	53-12-10-01	-009	06
6711135-61	53-30-06-01	-012	01	6711150-11	53-23-00-01	-015	08
6711135-62	53-30-06-02	-004	01	6711150-11	53-23-00-02	-015	12
6711135-63	53-30-06-01	-013	01	6711150-15	53-23-00-01	-011	01
6711135-64	53-30-06-02	-003	01	6711150-16	53-23-00-01	-012	01
6711135-75	53-30-06-01	-034	02	6711150-17	53-23-00-01	-013	01
6711135-76	53-30-06-02	-035	02	6711150-18	53-23-00-01	-014	01
6711135-77	53-30-06-01	-032	02	6711150-19	53-23-00-01	-008	06
6711135-78	53-30-06-02	-036	02	6711150-19	53-23-00-02	-007	06
6711135-79	53-30-06-01	-086	04	6711150-21	53-23-00-01	-007	06

© Cessna Aircraft Company

PART NUMBER	CH SEC SUBJ FIG	ITEM	REQ
6711150-21	53-23-00-02	-008	06
6711150-22	53-23-00-01	-009	01
6711150-23	53-23-00-01	-010	01
6711150-3	53-23-00-01	-001	01
6711150-4	53-23-00-01	-002	01
6711150-5	53-23-00-01	-003	01
6711150-6	53-23-00-01	-004	01
6711150-7	53-23-00-01	-005	01
6711150-8	53-23-00-01	-006	01
6711150-9	53-23-00-01	-016	04
6711151-10	53-23-00-02	-010	01
6711151-11	53-23-00-02	-011	01
6711151-12	53-23-00-02	-012	01
6711151-13	53-23-00-02	-013	01
6711151-14	53-23-00-02	-014	01
6711151-3	53-23-00-02	-001	01
6711151-4	53-23-00-02	-002	01
6711151-5	53-23-00-02	-003	01
6711151-6	53-23-00-02	-004	01
6711151-7	53-23-00-02	-005	01
6711151-8	53-23-00-02	-006	01
6711151-9	53-23-00-02	-009	01
6711155-13	53-22-00-20	-004	01
6711155-14	53-22-00-20	-007	01
6711155-6	53-22-00-20	-006	01
6711155-7	53-22-00-20	-001	01
6711155-8	53-22-00-20	-005	01
6711165-1	53-30-06-02	-095	02
6711165-11	53-30-06-02	-014	01
6711165-12	53-30-06-02	-033	01
6711165-13	53-30-06-01	-176	01
6711165-13	53-30-06-02	-106	01
6711165-16	53-30-06-02	-076	01
6711165-17	53-30-06-02	-075	01
6711165-18	53-30-06-02	-025	01
6711165-19	53-30-06-01	-150	01
6711165-21	53-30-06-01	-090	01
6711165-22	53-30-06-01	-159	01
6711165-23	53-30-06-01	-163	01
6711165-24	53-30-06-01	-014	01
6711165-25	53-30-06-01	-160	01
6711165-3	53-30-06-02	-032	05
6711165-30	53-30-06-01	-094	01
6711165-31	53-30-06-01	-153	01
6711165-33	53-30-06-01	-097	01
6711165-34	53-30-06-01	-100	01
6711165-35	53-30-06-02	-083	01
6711165-38	53-30-06-01	-028	01
6711165-39	53-30-06-01	-152	01
6711165-4	53-30-06-01	-035	06
6711165-4	53-30-06-02	-030	05
6711165-47	53-30-06-01	-172	01
6711165-48	53-30-06-02	-104	01
6711165-5	53-30-06-02	-020	01
6711165-51	53-30-06-02	-099	01
6711165-57	53-30-06-02	-087	01
6711165-58	53-30-06-01	-022	01
6711165-59	53-30-06-02	-094	01
6711165-6	53-30-06-01	-085	03
6711165-6	53-30-06-02	-037	09
6711165-60	53-30-06-02	-086	01
6711165-67	53-30-06-02	-081	01
6711165-7	53-30-06-01	-077	06
6711165-7	53-30-06-02	-080	06
6711168-1	53-30-06-03	-001	01
6711168-11	53-30-06-03	-150	04
6711168-11	53-30-06-04	-169	04
6711168-12	53-30-06-03	-234	01
6711168-12	53-30-06-03	-238	01
6711168-12	53-30-06-04	-239	02
6711168-13	53-30-06-03	-227	01
6711168-13	53-30-06-03	-230	01
6711168-13	53-30-06-04	-240	02
6711168-14	53-30-06-03	-015	01
6711168-14	53-30-06-03	-044	01
6711168-14	53-30-06-03	-076	05
6711168-14	53-30-06-03	-097	04
6711168-14	53-30-06-03	-164	01
6711168-14	53-30-06-04	-022	01
6711168-14	53-30-06-04	-077	11
6711168-14	53-30-06-04	-150	02
6711168-14	53-30-06-04	-177	01
6711168-15	53-30-06-03	-016	01
6711168-15	53-30-06-03	-041	01
6711168-15	53-30-06-03	-079	05
6711168-15	53-30-06-03	-093	04
6711168-15	53-30-06-03	-163	01
6711168-15	53-30-06-04	-023	01
6711168-15	53-30-06-04	-078	11
6711168-15	53-30-06-04	-151	02
6711168-15	53-30-06-04	-178	01
6711168-18	53-30-06-03	-012	01
6711168-19	53-30-06-03	-037	01
6711168-19	53-30-06-03	-102	03
6711168-19	53-30-06-04	-085	06
6711168-19	53-30-06-04	-155	01
6711168-21	53-30-06-03	-083	03
6711168-21	53-30-06-04	-086	05
6711168-21	53-30-06-04	-156	01
6711168-23	53-30-06-03	-019	02
6711168-23	53-30-06-03	-088	05
6711168-23	53-30-06-03	-158	02
6711168-24	53-30-06-03	-249	01
6711168-25	53-30-06-03	-252	01
6711168-26	53-30-06-03	-152	01
6711168-26	53-30-06-04	-026	01
6711168-26	53-30-06-04	-170	02
6711168-29	53-30-06-03	-153	01
6711168-3	53-30-06-03	-226	01
6711168-3	53-30-06-04	-225	01
6711168-30	53-30-06-03	-151	02
6711168-30	53-30-06-04	-171	01
6711168-34	53-30-06-03	-263	01
6711168-36	53-30-06-04	-005	01
6711168-37	53-30-06-04	-243	01
6711168-38	53-30-06-04	-251	01
6711168-39	53-30-06-04	-256	01
6711168-4	53-30-06-03	-225	01
6711168-4	53-30-06-04	-226	01
6711168-40	53-30-06-04	-010	01
6711168-40	53-30-06-04	-092	05
6711168-40	53-30-06-04	-186	02
6711168-41	53-30-06-04	-172	01
6711168-42	53-30-06-04	-006	01

© Cessna Aircraft Company

PART NUMBER	CH SEC SUBJ FIG	ITEM	REQ	PART NUMBER	CH SEC SUBJ FIG	ITEM	REQ
6711168-44	53-30-06-04	-031	01	6711171-8	53-22-00-02	-005	01
6711168-45	53-30-06-04	-032	01	6711171-9	53-22-00-02	-001	01
6711168-46	53-30-06-04	-019	01	6711172-2	53-22-00-01	-005	01
6711168-49	53-30-06-04	-161	01	6711172-5	53-22-00-01	-004	01
6711168-5	53-30-06-03	-075	05	6711173-2	53-22-00-01	-078	01
6711168-5	53-30-06-04	-076	05	6711178-2	53-12-15-01	-168	01
6711168-53	53-30-06-04	-246	01	6711180-2	53-20-00-12	-022	01
6711168-54	53-30-06-04	-165	01	6711180-3	53-20-00-12	-023	01
6711168-57	53-30-06-03	-096	01	6711180-4	53-20-00-12	-024	01
6711168-58	53-30-06-04	-081	01	6711180-5	53-20-00-12	-002	01
6711168-59	53-30-06-03	-098	01	6711180-6	53-20-00-12	-029	01
6711168-6	53-30-06-03	-157	01	6711180-7	53-20-00-12	-028	01
6711168-6	53-30-06-04	-176	01	6711180-8	53-20-00-12	-027	01
6711168-60	53-30-06-04	-082	01	6711182-2	53-20-00-11	-029	01
6711168-65	53-30-06-03	-007	01	6711182-3	53-20-00-11	-021	01
6711168-66	53-30-06-04	-015	01	6711182-4	53-20-00-11	-015	01
6711168-67	53-30-06-03	-242	01	6711183-2	53-20-00-11	-001	01
6711168-67	53-30-06-03	-245	01	6711184-2	53-20-00-10	-011	01
6711168-68	53-30-06-04	-230	01	6711186-2	53-12-15-01	-085	01
6711168-68	53-30-06-04	-234	01	6711186-3	53-12-15-01	-081	01
6711168-7	53-30-06-03	-005	01	6711186-4	53-12-15-01	-083	01
6711168-8	53-30-06-03	-256	01	6711187-4	53-12-15-01	-086	01
6711168-9	53-30-06-03	-006	01	6711187-7	53-12-15-01	-088	04
6711169-1	53-21-00-01	-076	01	6711195-10	52-10-37-01	-001	01
6711169-11	53-21-00-01	-105	01	6711195-28	52-10-37-01	-010	01
6711169-12	53-21-00-01	-184	01	6711195-31	52-10-37-01	-011	01
6711169-13	53-21-00-01	-109	01	6711195-34	52-10-37-01	-005	02
6711169-14	53-21-00-01	-108	01	6711195-38	52-10-37-01	-003	01
6711169-15	53-21-00-01	-014	01	6711195-6	52-10-37-01	-027	01
6711169-16	53-21-00-01	-016	01	6711195-7	52-10-37-01	-026	01
6711169-18	53-21-00-01	-029	01	6711200-10	52-10-37-01	-103	08
6711169-19	53-21-00-01	-008	NP	6711200-11	52-10-37-01	-098	01
6711169-2	53-21-00-01	-079	01	6711200-13	52-10-37-01	-084	02
6711169-20	53-21-00-01	-012	02	6711200-26	52-10-37-01	-080	02
6711169-21	53-21-00-01	-034	01	6711200-27	52-10-37-01	-092	02
6711169-22	53-21-00-01	-013	01	6711200-28	52-10-37-01	-083	01
6711169-23	53-21-00-01	-032	01	6711200-29	52-10-37-01	-089	02
6711169-24	53-21-00-01	-030	01	6711200-3	52-10-37-01	-100	01
6711169-27	53-21-00-01	-023	01	6711200-30	52-10-37-01	-075	01
6711169-28	53-21-00-01	-011	01	6711200-31	52-10-37-01	-096	01
6711169-29	53-21-00-01	-025	01	6711200-33	52-10-37-01	-093	03
6711169-3	53-21-00-01	-080	01	6711200-36	52-10-37-01	-082	01
6711169-30	53-21-00-01	-027	01	6711200-38	52-10-37-01	-081	01
6711169-31	53-21-00-01	-181	01	6711200-4	52-10-37-01	-101	01
6711169-32	53-21-00-01	-180	01	6711211-1	53-24-00-01	-178	01
6711169-33	53-21-00-01	-179	01	6711211-16	53-24-00-01	-022	01
6711169-34	53-21-00-01	-018	01	6711211-17	53-24-00-01	-104	01
6711169-35	53-21-00-01	-113	01	6711211-2	53-24-00-01	-094	01
6711169-36	53-21-00-01	-115	01	6711211-21	53-24-00-01	-105	01
6711169-37	53-21-00-01	-092	01	6711211-22	53-24-00-01	-042	01
6711169-38	53-21-00-01	-099	01	6711211-23	53-24-00-01	-043	01
6711169-39	53-21-00-01	-097	01	6711211-24	53-24-00-01	-044	01
6711169-4	53-21-00-01	-077	01	6711211-26	53-24-00-01	-098	01
6711169-5	53-21-00-01	-075	01	6711211-27	53-24-00-01	-150	01
6711169-56	53-21-00-02	-107	01	6711211-28	53-24-00-01	-075	01
6711169-58	53-21-00-02	-113	01	6711211-3	53-24-00-01	-179	01
6711169-59	53-21-00-01	-017	01	6711211-4	53-24-00-01	-095	01
6711169-6	53-21-00-01	-083	01	6711211-41	53-24-00-01	-006	01
6711169-7	53-21-00-01	-089	01	6711212-1	53-30-01-01	-002	01
6711169-8	53-21-00-01	-094	03	6711212-2	53-30-01-01	-003	01
6711169-9	53-21-00-01	-103	03	6711212-4	53-30-01-01	-005	01
6711171-10	53-22-00-02	-002	01	6711212-9	53-24-00-01	-045	01

© Cessna Aircraft Company

PART NUMBER	CH SEC SUBJ FIG	ITEM	REQ	PART NUMBER	CH SEC SUBJ FIG	ITEM	REQ
6711215-1	53-24-00-01	-003	01	6711233-8	53-30-06-01	-087	01
6711215-2	53-24-00-01	-004	01	6711233-9	53-30-06-01	-011	01
6711217-10	53-24-00-01	-253	01	6711233-9	53-30-06-02	-012	01
6711217-11	53-24-00-01	-256	01	6711234-3	53-30-06-02	-022	01
6711217-12	53-24-00-01	-257	01	6711234-5	53-30-06-02	-167	01
6711217-13	53-24-00-01	-260	01	6711234-6	53-30-06-02	-096	01
6711217-14	53-24-00-01	-261	01	6711234-9	53-30-06-02	-102	01
6711217-15	53-24-00-01	-264	01	6711236-2	53-30-06-04	-001	01
6711217-16	53-24-00-01	-265	01	6711236-3	53-30-06-04	-075	01
6711217-17	53-24-00-01	-271	01	6711237-10	53-30-06-03	-025	01
6711217-18	53-24-00-01	-272	01	6711237-4	53-30-06-03	-024	01
6711217-19	53-24-00-01	-280	01	6711237-5	53-30-06-03	-027	01
6711217-20	53-24-00-01	-281	01	6711237-6	53-30-06-03	-032	01
6711217-21	53-24-00-01	-287	01	6711237-7	53-30-06-03	-103	02
6711217-22	53-24-00-01	-288	01	6711237-7	53-30-06-03	-167	01
6711217-23	53-24-00-01	-300	01	6711237-8	53-30-06-03	-084	02
6711217-24	53-24-00-01	-301	01	6711237-8	53-30-06-04	-087	01
6711217-25	53-24-00-01	-308	01	6711237-8	53-30-06-04	-181	01
6711217-26	53-24-00-01	-309	01	6711237-9	53-30-06-03	-026	01
6711217-35	53-24-00-01	-302	01	6711241-10	53-20-00-04	-014	02
6711217-36	53-24-00-01	-303	01	6711241-3	53-20-00-04	-007	02
6711217-37	53-24-00-01	-312	01	6711241-4	53-20-00-04	-008	02
6711217-38	53-24-00-01	-313	01	6711241-7	53-20-00-04	-011	01
6711217-39	53-24-00-01	-310	01	6711241-8	53-20-00-04	-012	01
6711217-40	53-24-00-01	-311	01	6711241-9	53-20-00-04	-013	02
6711217-41	53-24-00-01	-233	01	6711242-3	53-20-00-05	-014	01
6711217-42	53-24-00-01	-234	01	6711242-4	53-20-00-05	-015	01
6711217-43	53-24-00-01	-231	01	6711245-3	53-20-00-08	-031	01
6711217-44	53-24-00-01	-232	01	6711245-4	53-20-00-08	-032	01
6711217-45	53-24-00-01	-229	01	6711246-2	53-20-00-09	-025	01
6711217-46	53-24-00-01	-230	01	6711246-3	53-20-00-09	-024	01
6711217-47	53-24-00-01	-227	01	6711246-4	53-20-00-09	-027	01
6711217-48	53-24-00-01	-228	01	6711246-5	53-20-00-09	-026	01
6711217-49	53-24-00-01	-235	01	6711246-6	53-20-00-09	-011	01
6711217-5	53-24-00-01	-289	01	6711246-7	53-20-00-09	-010	01
6711217-50	53-24-00-01	-236	01	6711250-5	52-20-00-01	-003	02
6711217-51	53-24-00-01	-241	01	6711251-3	52-20-00-01	-015	01
6711217-52	53-24-00-01	-242	01	6711251-4	52-20-00-01	-016	01
6711217-53	53-24-00-01	-226	01	6711252-112	52-20-10-01	-002	01
6711217-54	53-24-00-01	-225	01	6711252-113	52-20-00-01	-006	01
6711217-6	53-24-00-01	-290	01	6711252-114	52-20-10-01	-001	01
6711217-7	53-24-00-01	-243	01	6711252-117	52-20-10-01	-008	01
6711217-8	53-24-00-01	-244	01	6711252-118	52-20-00-01	-011	01
6711217-9	53-24-00-01	-252	01	6711252-123	52-20-10-01	-022	01
6711220-3	53-24-00-01	-001	01	6711252-125	52-20-10-01	-007	01
6711221-2	53-24-00-01	-002	01	6711252-45	52-20-10-01	-025	02
6711223-1	53-23-00-03	-001	01	6711252-77	52-20-10-01	-014	01
6711223-2	53-23-00-03	-009	01	6711252-91	52-20-10-01	-005	01
6711224-3	53-23-00-03	-017	01	6711253-201	52-20-00-01	-010	01
6711231-2	53-21-00-01	-009	01	6711253-5	52-20-00-01	-009	NP
6711231-4	53-21-00-01	-106	01	6711253-7	52-20-00-01	-012	01
6711233-11	53-30-06-01	-002	01	6711253-8	52-20-00-01	-012A	01
6711233-12	53-30-06-02	-001	01	6711256-15	53-12-10-01	-023	01
6711233-13	53-30-06-01	-003	01	6711256-16	53-12-10-01	-024	01
6711233-14	53-30-06-02	-008	01	6711256-17	53-12-10-01	-025	01
6711233-15	53-30-06-01	-010	01	6711256-18	53-12-10-01	-026	01
6711233-16	53-30-06-02	-011	01	6711256-19	53-12-10-01	-032	01
6711233-17	53-30-06-01	-004	01	6711256-2	53-12-10-01	-001	01
6711233-18	53-30-06-02	-010	01	6711256-20	53-12-10-01	-031	01
6711233-3	53-30-06-01	-030	01	6711256-21	53-12-10-01	-030	01
6711233-5	53-30-06-01	-164	01	6711256-22	53-12-10-01	-029	01
6711233-7	53-30-06-01	-151	01	6711256-23	53-12-10-01	-028	01

© Cessna Aircraft Company

PART NUMBER	CH SEC SUBJ FIG	ITEM	REQ
6711256-24	53-12-10-01	-027	01
6711256-27	53-12-10-01	-022	02
6711256-28	53-12-10-01	-021	02
6711256-3	53-12-10-01	-002	01
6711256-33	53-12-10-01	-013	01
6711256-35	53-12-10-01	-008	NP
6711256-36	53-12-10-01	-017	01
6711256-43	53-12-10-01	-033	48
6711256-44	52-20-00-01	-001	02
6711256-44	53-12-10-01	-011	02
6711256-45	53-12-10-01	-014	01
6711256-48	53-12-10-01	-034	48
6711256-49	53-12-10-01	-008A	07
6711270-12	52-10-09-01	-001	02
6711270-12	52-10-09-01	-011	04
6711270-12	53-12-15-01	-158	06
6711270-13	52-10-09-01	-009	02
6711270-13	52-10-09-01	-024	04
6711270-13	53-12-15-01	-152	12
6711270-2	52-10-09-01	-019	02
6711270-2	53-12-15-01	-153	02
6711270-3	52-10-09-01	-002	02
6711270-3	52-10-09-01	-012	04
6711270-3	53-12-15-01	-157	05
6711270-5	52-10-09-01	-014	04
6711270-5	52-30-20-01	-105	08
6711270-5	53-12-15-01	-159	04
6711270-5	53-60-05-01	-016	08
6711270-6	52-10-09-01	-004	02
6711270-6	53-12-15-01	-163	02
6711270-8	52-10-09-01	-013	04
6711270-8	52-30-20-01	-108	08
6711270-8	53-12-15-01	-150	04
6711270-8	53-60-05-01	-020	08
6711270-9	52-10-09-01	-003	02
6711270-9	53-12-15-01	-151	02
6711295-1	52-10-00-01	-001	01
6711296-2	52-10-03-01	-001	01
6711296-4	52-10-03-01	-007	01
6711296-8	52-10-03-01	-029	01
6711311-1	52-10-00-01	-150	01
6711314-13	52-11-00-01	-019	01
6711314-14	52-11-00-01	-029	01
6711314-15	52-11-00-01	-035	01
6711314-16	52-11-00-01	-016	01
6711314-17	52-11-00-01	-033	01
6711314-18	52-11-00-01	-022	01
6711314-2	52-11-00-01	-037	01
6711314-20	52-11-00-01	-003	01
6711314-3	52-11-00-01	-038	01
6711314-4	52-11-00-01	-039	01
6711314-5	52-11-00-01	-040	01
6711314-6	52-11-00-01	-041	01
6711314-7	52-11-00-01	-042	01
6711314-8	52-11-00-01	-004	01
6711316-11	52-10-21-01	-032	01
6711316-20	52-10-21-01	-013	01
6711316-39	52-10-21-01	-094	01
6711316-40	52-10-21-01	-084	01
6711316-41	52-10-21-01	-008	01
6711316-42	52-10-21-01	-080	01
6711316-42	52-10-21-01	-099	01
6711316-46	52-10-21-01	-108	01
6711316-47	52-10-21-01	-012	01
6711316-48	52-10-21-01	-011	01
6711316-49	52-10-21-01	-003	01
6711316-52	52-10-21-01	-001	01
6711316-53	52-10-21-01	-104	01
6711316-6	52-10-21-01	-075	01
6711316-61	52-10-21-01	-150	01
6711316-64	52-10-21-01	-014	01
6711316-66	52-10-21-01	-166	01
6711316-7	52-10-21-01	-109	01
6711316-70	52-10-21-01	-155	01
6711316-72	52-10-21-01	-007	02
6711316-73	52-10-21-01	-005	01
6711316-74	52-10-21-01	-009	01
6711316-76	52-10-21-01	-100	01
6711316-78	52-10-21-01	-162	01
6711316-79	52-10-21-01	-024	01
6711316-80	52-10-21-01	-028	01
6711316-81	52-10-21-01	-036	01
6711316-82	52-10-21-01	-018	01
6711316-83	52-10-21-01	-086	01
6711316-84	52-10-21-01	-168	01
6711320-201	52-10-35-01	-029	02
6711321-101	52-10-00-01	-159	01
6711321-102	52-10-00-01	-160	01
6711321-110	52-10-00-01	-180	02
6711321-111	52-10-00-01	-181	01
6711321-37	52-10-00-01	-151	01
6711321-39	52-10-00-01	-157	01
6711321-40	52-10-00-01	-156	02
6711321-41	52-10-00-01	-158	01
6711322-18	52-10-35-01	-021	01
6711322-23	52-10-35-01	-087	01
6711322-30	52-10-35-01	-024	04
6711322-38	52-10-35-01	-090	04
6711322-39	52-10-35-01	-091	02
6711322-40	52-10-35-01	-092	02
6711322-41	52-10-35-01	-093	04
6711322-43	52-10-35-01	-005	01
6711322-43	52-10-35-01	-013	01
6711322-47	52-10-35-01	-083	02
6711322-49	52-10-35-01	-075	04
6711322-5	52-10-35-01	-076	01
6711322-50	52-10-35-01	-019	02
6711322-51	52-10-35-01	-018	02
6711322-52	52-10-35-01	-004	01
6711322-52	52-10-35-01	-012	01
6711322-53	52-10-35-01	-003	01
6711322-54	52-10-35-01	-011	01
6711322-55	52-10-35-01	-002	01
6711322-55	52-10-35-01	-010	01
6711322-56	52-10-35-01	-001	01
6711322-57	52-10-35-01	-009	01
6711322-58	52-10-35-01	-036	01
6711322-59	52-10-35-01	-037	01
6711322-6	52-10-35-01	-077	01
6711323-100	52-10-03-01	-105	01
6711323-103	52-10-03-01	-083	01
6711323-104	52-10-03-01	-008	01
6711323-111	52-10-03-01	-158	01
6711323-112	52-10-03-01	-165	01

© Cessna Aircraft Company

PART NUMBER	CH SEC SUBJ FIG	ITEM	REQ
6711323-116	52-10-03-01	-150	01
6711323-119	52-10-03-01	-166	01
6711323-120	52-10-03-01	-162	01
6711323-121	52-10-03-01	-168	01
6711323-122	52-10-03-01	-153	01
6711323-127	52-10-03-01	-024	01
6711323-37	52-10-03-01	-094	01
6711323-44	52-10-03-01	-020	01
6711323-50	52-10-03-01	-012	01
6711323-59	52-10-03-01	-091	01
6711323-63	52-10-03-01	-015	01
6711323-65	52-10-03-01	-010	01
6711323-8	52-10-03-01	-097	01
6711323-83	52-10-03-01	-080	01
6711323-89	52-10-03-01	-030	01
6711323-93	52-10-03-01	-104	01
6711323-95	52-10-03-01	-078	01
6711323-96	52-10-03-01	-075	01
6711323-97	52-10-03-01	-031	01
6711324-103	52-10-22-02	-258	01
6711324-104	52-10-22-01	-095	01
6711324-108	52-10-22-02	-225	01
6711324-109	52-10-22-02	-265	01
6711324-111	52-10-22-02	-315	01
6711324-115	52-10-22-01	-246	01
6711324-118	52-10-22-02	-304	01
6711324-119	52-10-22-02	-310	01
6711324-122	52-10-22-02	-300	01
6711324-125	52-10-22-02	-400	01
6711324-126	52-10-22-02	-401	01
6711324-13	52-10-22-01	-171	01
6711324-132	52-10-22-02	-234	01
6711324-133	52-10-22-02	-232	01
6711324-138	52-10-22-01	-098	01
6711324-139	52-10-22-01	-099	01
6711324-140	52-10-22-02	-406	01
6711324-143	52-10-22-01	-235	01
6711324-144	52-10-22-01	-236	01
6711324-145	52-10-22-01	-026	02
6711324-147	52-10-22-02	-396	01
6711324-149	52-10-22-02	-391	01
6711324-15	52-10-22-01	-023	01
6711324-152	52-10-22-02	-243	01
6711324-153	52-10-22-01	-255	02
6711324-154	52-10-22-02	-240	01
6711324-156	52-10-22-02	-330	01
6711324-16	52-10-22-01	-027	AR
6711324-16	52-10-22-01	-251	AR
6711324-160	52-10-22-02	-376	01
6711324-162	52-10-22-02	-377	01
6711324-163	52-10-22-02	-375	01
6711324-164	52-10-22-02	-331	01
6711324-169	52-10-22-01	-249	01
6711324-170	52-10-22-01	-250	01
6711324-171	52-10-22-02	-416	02
6711324-172	52-10-22-01	-174	01
6711324-173	52-10-22-01	-166	01
6711324-174	52-10-22-01	-001	01
6711324-175	52-10-22-01	-002	01
6711324-176	52-10-22-01	-075	01
6711324-177	52-10-22-01	-076	01
6711324-178	52-10-22-01	-150	01

PART NUMBER	CH SEC SUBJ FIG	ITEM	REQ
6711324-179	52-10-22-01	-151	01
6711324-180	52-10-22-01	-015	01
6711324-180	52-10-22-01	-087	01
6711324-180	52-10-22-01	-164	01
6711324-181	52-10-22-01	-031	02
6711324-181	52-10-22-01	-104	02
6711324-181	52-10-22-01	-183	02
6711324-183	52-10-22-02	-238	01
6711324-19	52-10-22-01	-017	01
6711324-20	52-10-22-01	-018	01
6711324-22	52-10-22-01	-167	01
6711324-29	52-10-22-02	-383	02
6711324-31	52-10-22-01	-089	01
6711324-32	52-10-22-01	-090	01
6711324-33	52-10-22-01	-240	01
6711324-34	52-10-22-01	-241	01
6711324-37	52-10-22-01	-225	01
6711324-38	52-10-22-01	-226	01
6711324-42	52-10-22-01	-100	02
6711324-42	52-10-22-01	-178	02
6711324-53	52-10-22-01	-176	01
6711324-54	52-10-22-01	-177	01
6711324-59	52-10-22-02	-249	01
6711324-62	52-10-22-02	-322	01
6711324-67	52-10-22-02	-405	01
6711324-68	52-10-22-02	-412	01
6711324-77	52-10-22-02	-267	02
6711324-87	52-10-22-02	-184	01
6711324-91	52-10-22-02	-178	01
6711325-12	52-10-13-01	-018	01
6711325-13	52-10-13-01	-019	01
6711325-14	52-10-13-01	-013	01
6711325-15	52-10-13-01	-014	01
6711325-18	52-10-13-01	-001	01
6711325-19	52-10-13-01	-002	01
6711325-20	52-10-13-01	-011	01
6711325-21	52-10-13-01	-024	01
6711325-22	52-10-13-01	-007	01
6711325-23	52-10-13-01	-008	01
6711325-24	52-10-13-01	-012	01
6711325-8	52-10-13-01	-022	01
6711326-38	52-10-22-02	-001	01
6711326-39	52-10-22-02	-002	01
6711326-40	52-10-22-02	-013	02
6711326-41	52-10-22-02	-026	01
6711326-42	52-10-22-02	-027	01
6711326-45	52-10-22-02	-150	01
6711326-58	52-10-22-02	-009	01
6711326-59	52-10-22-02	-010	01
6711326-61	52-10-22-02	-159	01
6711326-62	52-10-22-02	-160	01
6711326-63	52-10-22-02	-168	01
6711326-64	52-10-22-02	-169	01
6711326-65	52-10-22-02	-161	01
6711326-66	52-10-22-02	-028	01
6711326-69	52-10-22-02	-075	01
6711327-30	52-10-00-01	-166	02
6711327-41	52-10-00-01	-163	01
6711327-60	52-10-00-01	-155	01
6711327-61	52-10-00-01	-154	01
6711327-65	52-10-00-01	-182	02
6711328-10	52-10-11-01	-027	02

© Cessna Aircraft Company

PART NUMBER	CH SEC SUBJ FIG	ITEM	REQ	PART NUMBER	CH SEC SUBJ FIG	ITEM	REQ
6711328-107	52-10-11-01	-190	01	6711356-32	53-42-01-01	-001A	01
6711328-108	52-10-11-01	-236	04	6711356-5	53-42-01-01	-003	16
6711328-110	52-10-11-01	-234	01	6711357-11	53-42-01-01	-015	01
6711328-111	52-10-11-01	-005	01	6711357-12	53-42-01-01	-016	01
6711328-112	52-10-11-01	-001	01	6711357-13	53-42-01-01	-013	01
6711328-113	52-10-11-01	-006	01	6711357-14	53-42-01-01	-014	01
6711328-116	52-10-11-01	-246	01	6711357-15	53-42-01-01	-006	01
6711328-13	52-10-11-01	-150	01	6711357-3	53-42-01-01	-007	01
6711328-14	52-10-11-01	-151	01	6711357-4	53-42-01-01	-008	01
6711328-15	52-10-11-01	-092	01	6711357-5	53-42-01-01	-009	01
6711328-16	52-10-11-01	-081	01	6711357-6	53-42-01-01	-010	01
6711328-17	52-10-11-01	-084	01	6711357-7	53-42-01-01	-011	01
6711328-18	52-10-11-01	-086	01	6711357-8	53-42-01-01	-012	01
6711328-2	52-10-11-01	-007	01	6711358-11	53-42-01-01	-091	01
6711328-20	52-10-11-01	-075	01	6711358-12	53-42-01-01	-092	01
6711328-21	52-10-11-01	-152	01	6711358-13	53-42-01-01	-083	01
6711328-22	52-10-11-01	-156	01	6711358-14	53-42-01-01	-084	01
6711328-23	52-10-11-01	-100	01	6711358-15	53-42-01-01	-087	01
6711328-3	52-10-11-01	-008	01	6711358-16	53-42-01-01	-088	01
6711328-35	52-10-11-01	-183	01	6711358-17	53-42-01-01	-093	01
6711328-36	52-10-11-01	-096	01	6711358-18	53-42-01-01	-094	01
6711328-38	52-10-11-01	-016	02	6711358-19	53-42-01-01	-077	01
6711328-4	52-10-11-01	-010	01	6711358-20	53-42-01-01	-078	01
6711328-47	52-10-11-01	-270	01	6711358-21	53-42-01-01	-085	01
6711328-58	52-10-11-01	-022	01	6711358-22	53-42-01-01	-086	01
6711328-59	52-10-11-01	-159	01	6711358-3	53-42-01-01	-095	01
6711328-60	52-10-11-01	-099	01	6711358-39	53-42-01-01	-097	01
6711328-63	52-10-11-01	-233	01	6711358-4	53-42-01-01	-096	01
6711328-64	52-10-11-01	-189	01	6711358-40	53-42-01-01	-100	02
6711328-65	52-10-11-01	-245	01	6711358-5	53-42-01-01	-075	01
6711328-66	52-10-11-01	-265	01	6711358-6	53-42-01-01	-076	01
6711328-68	52-10-11-01	-239	01	6711358-7	53-42-01-01	-089	01
6711328-72	52-10-11-01	-176	01	6711358-8	53-42-01-01	-090	01
6711328-73	52-10-11-01	-230	01	6711359-10	53-42-04-04	-022	01
6711328-8	52-10-11-01	-013	01	6711359-11	53-42-04-04	-006	01
6711328-81	52-10-11-01	-177	01	6711359-12	53-42-04-04	-005	01
6711328-9	52-10-11-01	-023	01	6711359-13	53-42-04-04	-014	01
6711331-1	52-10-00-01	-021	02	6711359-14	53-42-04-04	-013	01
6711331-1	53-12-15-01	-023	02	6711359-15	53-42-04-04	-017	01
6711331-23	52-10-00-01	-007	01	6711359-16	53-42-04-04	-016	01
6711331-24	52-10-00-01	-008	01	6711359-17	53-42-04-04	-008	01
6711331-27	52-10-00-01	-004	AR	6711359-18	53-42-04-04	-007	01
6711331-28	52-10-00-01	-005	AR	6711359-19	53-42-04-04	-003	01
6711331-29	52-10-00-01	-006	AR	6711359-2	53-42-04-04	-021	01
6711331-5	52-10-00-01	-022	02	6711359-20	53-42-04-04	-018	01
6711331-6	52-10-00-01	-016	02	6711359-21	53-42-04-04	-012	01
6711331-7	52-10-00-01	-023	02	6711359-22	53-42-04-04	-002	01
6711331-8	52-10-00-01	-002	01	6711359-3	53-42-04-04	-001	01
6711331-9	52-10-00-01	-003	01	6711359-4	53-42-04-04	-020	01
6711333-13	52-10-37-01	-029	01	6711359-5	53-42-04-04	-023	01
6711333-14	52-10-37-01	-028	01	6711359-6	53-42-04-04	-004	01
6711333-23	52-10-37-01	-004	01	6711359-7	53-42-04-04	-011	01
6711333-6	52-10-37-01	-002	01	6711359-8	53-42-04-04	-015	01
6711334-18	52-10-37-01	-106	01	6711359-9	53-42-04-04	-019	01
6711335-1	52-10-03-01	-036	01	6711360-11	53-42-03-01	-018	01
6711336-2	52-11-25-01	-001	01	6711360-12	53-42-03-01	-013	01
6711336-5	52-11-25-01	-003	01	6711360-13	53-42-03-01	-012	01
6711350-2	28-11-55-01	-079	01	6711360-14	53-42-03-01	-033	01
6711350-3	28-11-55-01	-080	01	6711360-15	53-42-03-01	-015	01
6711355-1	28-11-55-01	-001	01	6711360-16	53-42-03-01	-016	01
6711356-29	53-42-01-01	-002	01	6711360-17	53-42-03-01	-010	01
6711356-31	53-42-01-01	-001	NP	6711360-18	53-42-03-01	-011	01

© Cessna Aircraft Company

PART NUMBER	CH SEC SUBJ FIG	ITEM	REQ	PART NUMBER	CH SEC SUBJ FIG	ITEM	REQ
6711360-19	53-42-03-01	-022	01	6711363-14	53-42-04-03	-019	01
6711360-20	53-42-03-01	-023	01	6711363-15	53-42-04-03	-016	01
6711360-23	53-42-03-01	-031	01	6711363-16	53-42-04-03	-017	01
6711360-27	53-42-03-01	-035	01	6711363-17	53-42-04-03	-005	01
6711360-28	53-42-03-01	-036	01	6711363-18	53-42-04-03	-006	01
6711360-3	53-42-03-01	-001	01	6711363-2	53-42-04-03	-025	01
6711360-31	53-42-03-01	-034	01	6711363-3	53-42-04-03	-022	01
6711360-35	53-42-03-01	-024	01	6711363-4	53-42-04-03	-023	01
6711360-36	53-42-03-01	-025	01	6711363-5	53-42-04-03	-001	01
6711360-37	53-42-03-01	-003	01	6711363-6	53-42-04-03	-002	01
6711360-38	53-42-03-01	-032	01	6711363-7	53-42-04-03	-007	01
6711360-39	53-42-03-01	-026	01	6711363-8	53-42-04-03	-008	01
6711360-4	53-42-03-01	-002	01	6711363-9	53-42-04-03	-024	01
6711360-40	53-42-03-01	-027	01	6711364-10	53-42-03-01	-091	01
6711360-41	53-42-03-01	-019	01	6711364-11	53-42-03-01	-077	01
6711360-5	53-42-03-01	-004	01	6711364-12	53-42-03-01	-078	01
6711360-6	53-42-03-01	-005	01	6711364-13	53-42-03-01	-079	01
6711360-7	53-42-03-01	-017	01	6711364-14	53-42-03-01	-080	01
6711361-10	53-42-04-01	-016	01	6711364-15	53-42-03-01	-081	02
6711361-11	53-42-04-01	-006	01	6711364-16	53-42-03-01	-098	01
6711361-11	53-42-04-01	-013	01	6711364-17	53-42-03-01	-092	01
6711361-11	53-42-04-02	-004	02	6711364-18	53-42-03-01	-101	01
6711361-11	53-42-04-03	-026	01	6711364-19	53-42-03-01	-105	01
6711361-12	53-42-04-01	-005	01	6711364-2	53-42-03-01	-082	01
6711361-12	53-42-04-01	-014	01	6711364-3	53-42-03-01	-086	02
6711361-12	53-42-04-02	-003	02	6711364-4	53-42-03-01	-087	03
6711361-12	53-42-04-03	-027	01	6711364-5	53-42-03-01	-083	01
6711361-13	53-42-04-01	-011	01	6711364-5	53-42-04-03	-003	02
6711361-14	53-42-04-01	-012	01	6711364-6	53-42-03-01	-084	01
6711361-15	53-42-04-01	-009	01	6711364-6	53-42-04-03	-004	02
6711361-16	53-42-04-01	-010	01	6711364-7	53-42-03-01	-094	01
6711361-17	53-42-04-01	-008	01	6711364-8	53-42-03-01	-093	01
6711361-18	53-42-04-01	-007	01	6711365-13	53-42-02-01	-001	01
6711361-19	53-42-04-01	-003	01	6711365-14	53-42-02-01	-002	01
6711361-20	53-42-04-01	-004	01	6711365-8	53-42-02-01	-003	01
6711361-21	53-42-04-01	-017	01	6711370-1	53-42-04-03	-010	01
6711361-22	53-42-04-01	-018	01	6711370-10	53-42-04-04	-024	01
6711361-5	53-42-04-01	-019	01	6711370-11	28-11-55-01	-011	02
6711361-6	53-42-04-01	-020	01	6711370-13	53-42-03-01	-095	01
6711361-7	53-42-04-01	-001	01	6711370-2	53-42-04-03	-011	01
6711361-8	53-42-04-01	-002	01	6711370-3	53-42-04-03	-012	01
6711361-9	53-42-04-01	-015	01	6711370-4	53-42-04-03	-013	01
6711362-10	53-42-04-02	-014	01	6711370-5	53-42-03-01	-006	01
6711362-11	53-42-04-02	-011	01	6711370-6	53-42-03-01	-007	01
6711362-12	53-42-04-02	-012	01	6711370-8	53-22-00-03	-005	02
6711362-13	53-42-04-02	-009	01	6711370-8	53-22-00-04	-085	02
6711362-14	53-42-04-02	-010	01	6711370-9	28-11-55-01	-010	02
6711362-15	53-42-04-02	-007	01	6711371-1	52-10-22-02	-170	01
6711362-16	53-42-04-02	-008	01	6711371-2	52-10-22-02	-175	01
6711362-17	53-42-04-02	-005	01	6711371-3	52-10-22-02	-171	01
6711362-18	53-42-04-02	-006	01	6711371-4	52-10-22-02	-177	01
6711362-19	53-42-04-02	-015	01	6711371-5	52-10-22-02	-176	01
6711362-3	53-42-04-02	-017	01	6711372-6	52-10-22-02	-183	01
6711362-4	53-42-04-02	-018	01	6711372-8	52-10-22-02	-180	01
6711362-6	53-42-04-02	-016	01	6711373-33	52-10-00-01	-079	02
6711362-7	53-42-04-02	-001	01	6711400-102	27-20-05-01	-165	01
6711362-8	53-42-04-02	-002	01	6711400-103	27-11-00-01	-113	01
6711362-9	53-42-04-02	-013	01	6711400-104	27-11-00-01	-111	01
6711363-10	53-42-04-03	-009	01	6711400-12	27-60-20-01	-010	01
6711363-11	53-42-04-03	-020	01	6711400-14	27-60-00-01	-103	01
6711363-12	53-42-04-03	-021	01	6711400-18	27-20-05-01	-166	02
6711363-13	53-42-04-03	-018	01	6711400-20	27-20-05-01	-168	01

© Cessna Aircraft Company

PART NUMBER	CH SEC SUBJ FIG	ITEM	REQ	PART NUMBER	CH SEC SUBJ FIG	ITEM	REQ
6711400-21	27-20-05-01	-167	01	6711456-19	32-49-00-01	-077	01
6711400-24	27-20-05-01	-180	01	6711500-2	53-22-00-07	-012	01
6711400-42	27-11-00-01	-110	01	6711500-3	53-22-00-07	-013	01
6711400-45	27-11-00-01	-114	01	6711500-3	53-22-00-07	-085	01
6711400-52	27-11-00-01	-112	01	6711500-3	53-22-00-07	-160	01
6711400-53	27-10-15-01	-095	01	6711500-3	53-22-00-08	-010	01
6711400-54	27-10-15-01	-096	01	6711500-3	53-22-00-08	-085	02
6711400-59	27-20-05-01	-160	01	6711500-4	53-22-00-07	-006	01
6711400-60	27-20-05-01	-163	01	6711519-1	53-22-00-08	-081	08
6711400-63	27-20-05-01	-162	01	6711519-2	53-22-00-08	-084	01
6711400-68	27-20-05-01	-161	01	6711519-3	53-22-00-07	-005	01
6711400-75	27-20-05-01	-183	01	6711519-3	53-22-00-07	-154	01
6711400-78	27-20-05-01	-184	01	6711519-3	53-22-00-08	-079	01
6711400-79	27-20-05-01	-185	01	6711519-4	53-22-00-07	-078	01
6711400-8	27-20-05-01	-182	01	6711519-4	53-22-00-08	-004	01
6711400-84	27-20-05-01	-186	02	6711519-4	53-22-00-08	-080	01
6711400-86	27-20-05-01	-179	01	6711519-5	53-22-00-07	-015	01
6711400-9	27-20-05-01	-181	01	6711519-5	53-22-00-07	-161	01
6711400-90	27-36-00-01	-227	01	6711519-5	53-22-00-08	-086	01
6711400-93	27-60-00-01	-079	01	6711519-6	53-22-00-07	-086	01
6711400-99	27-20-05-01	-164	01	6711519-6	53-22-00-08	-012	01
6711401-7	38-30-15-01	-008	01	6711519-6	53-22-00-08	-087	01
6711401-7	53-24-00-01	-005	01	6711519-7	53-22-00-07	-016	01
6711402-85	27-30-05-01	-180	01	6711519-7	53-22-00-07	-162	01
6711402-88	27-30-05-01	-181	01	6711519-7	53-22-00-08	-088	01
6711403-5	34-25-00-01	-009	01	6711519-8	53-22-00-07	-084	01
6711403-5	53-20-01-01	-007	01	6711519-8	53-22-00-08	-013	01
6711403-6	34-25-00-01	-010	01	6711519-8	53-22-00-08	-089	01
6711403-6	53-20-01-01	-008	01	6711529-1	53-22-00-07	-159	01
6711403-7	53-20-01-01	-009	01	6711529-2	53-22-00-07	-155	01
6711403-8	53-20-01-01	-010	01	6711529-3	53-22-00-07	-083	01
6711411-2	32-45-00-01	-023	01	6711529-4	53-22-00-07	-079	01
6711415-1	27-60-30-01	-027	01	6711534-1	53-12-10-01	-003	01
6711415-13	27-60-30-01	-025	01	6711534-10	53-12-10-01	-010	NP
6711415-17	27-60-30-01	-018	01	6711534-11	53-12-10-01	-010A	01
6711415-18	27-60-30-01	-019	01	6711534-3	53-12-10-01	-005	01
6711415-19	27-60-30-01	-022	01	6711534-4	53-12-10-01	-004	01
6711415-2	27-13-05-01	-032	01	6711534-5	53-12-10-01	-019	01
6711415-20	27-60-30-01	-023	01	6711534-6	53-12-10-01	-020	01
6711415-21	27-60-30-01	-026	01	6711534-7	53-12-10-01	-018	01
6711415-22	27-13-05-01	-016	01	6711534-8	53-12-10-01	-015	01
6711415-43	27-13-05-01	-027	01	6711534-9	53-12-10-01	-016	01
6711415-47	27-13-05-01	-033	01	6711549-1	53-22-00-09	-098	01
6711415-51	27-60-30-01	-020	01	6711549-10	53-22-00-09	-095	01
6711415-65	27-60-30-01	-024	01	6711549-11	53-22-00-09	-092	02
6711415-66	27-60-30-01	-021	01	6711549-12	53-22-00-09	-087	01
6711415-67	27-13-05-01	-034	01	6711549-13	53-22-00-09	-077	01
6711418-19	27-60-20-01	-083	02	6711549-14	53-22-00-09	-076	01
6711418-30	27-60-20-01	-009	01	6711549-15	53-22-00-09	-075	01
6711418-32	27-60-20-01	-152	01	6711549-16	53-22-00-09	-089	03
6711418-36	27-60-20-01	-151	01	6711549-17	53-22-00-09	-090	01
6711418-41	27-60-00-01	-102	01	6711549-18	53-22-00-09	-088	02
6711418-7	27-60-20-01	-024	01	6711549-19	53-22-00-09	-091	02
6711422-11	27-20-05-02	-094	01	6711549-2	53-22-00-09	-100	01
6711422-12	27-20-05-02	-093	01	6711549-21	53-22-00-09	-011	01
6711423-3	32-30-00-03	-057	01	6711549-22	53-22-00-09	-013	01
6711424-2	34-24-01-01	-001	02	6711549-3	53-22-00-09	-094	01
6711424-4	34-24-01-01	-003	01	6711549-4	53-22-00-09	-096	01
6711424-5	34-24-01-01	-005	01	6711549-5	53-22-00-09	-150	08
6711424-7	34-24-01-01	-001A	01	6711549-7	53-22-00-09	-097	01
6711424-8	34-24-01-01	-001B	01	6711549-8	53-22-00-09	-099	01
6711433-8	32-30-00-02	-186	02	6711549-9	53-22-00-09	-093	01

© Cessna Aircraft Company

PART NUMBER	CH SEC SUBJ FIG	ITEM	REQ
6711559-1	53-22-00-10	-012	01
6711559-2	53-22-00-10	-013	01
6711559-3	53-22-00-10	-014	01
6711559-4	53-22-00-10	-015	01
6711569-1	53-22-00-08	-009	01
6711569-2	53-22-00-08	-005	01
6711569-3	53-22-00-07	-007	01
6711569-3	53-22-00-07	-008	01
6711569-3	53-22-00-07	-156	02
6711569-4	53-22-00-07	-009	01
6711569-4	53-22-00-07	-080	02
6711569-4	53-22-00-08	-006	02
6711579-1	53-22-00-19	-021	01
6712016-22	53-60-01-08	-152	03
6712016-23	53-60-01-08	-162	01
6712016-23	53-60-01-08	-227	03
6712016-23	53-60-01-08	-233	03
6712018-7	53-60-01-09	-001	01
6712019-13	53-60-01-09	-025	01
6712019-5	53-60-01-09	-027	01
6712019-6	53-60-01-09	-028	01
6712020-39	53-60-01-10	-103	01
6712020-40	53-60-01-10	-102	01
6712020-45	53-60-01-10	-046	01
6712020-46	53-60-01-10	-047	01
6712020-53	53-60-01-10	-120	01
6712020-54	53-60-01-10	-121	01
6712020-59	53-60-01-10	-042	02
6712020-60	53-60-01-10	-043	02
6712020-61	53-60-01-10	-087	01
6712020-62	53-60-01-10	-088	01
6712020-63	53-60-01-10	-044	01
6712020-7	53-60-01-10	-013	01
6712020-8	53-60-01-10	-014	01
6712021-7	53-60-01-09	-087	01
6712021-8	53-60-01-09	-088	01
6712022-13	53-60-01-09	-107	01
6712022-14	53-60-01-09	-108	01
6712025-3	53-60-01-11	-019	01
6712025-4	53-60-01-11	-020	01
6712025-5	53-60-01-11	-001	01
6712025-6	53-60-01-11	-002	01
6712025-7	53-60-01-11	-007	01
6712025-8	53-60-01-11	-008	01
6712027-5	53-60-01-11	-075	01
6712027-6	53-60-01-11	-076	01
6712028-10	53-60-01-11	-093	01
6712028-9	53-60-01-11	-092	01
6712029-28	53-30-02-01	-012	01
6712029-30	53-30-02-01	-014	01
6712029-34	53-30-02-01	-015	01
6712029-41	53-30-02-01	-011	01
6712029-43	53-30-02-01	-010	01
6712029-46	53-30-02-01	-013	01
6712029-47	53-30-02-01	-016	01
6712031-3	53-60-02-02	-009	01
6712031-4	53-60-02-02	-010	01
6712032-1	53-60-02-02	-001	01
6712034-3	53-60-02-03	-001	01
6712035-10	53-60-01-12	-009	01
6712035-11	53-60-01-12	-008	01
6712035-2	53-60-01-12	-019	01
6712035-20	53-60-01-12	-015	01
6712035-6	53-60-01-12	-001	01
6712035-9	53-60-01-12	-013	01
6712036-13	53-60-01-12	-016	01
6712036-14	53-60-01-12	-017	01
6712036-6	53-60-01-12	-007	01
6712036-7	53-60-01-12	-006	01
6712047-19	53-60-00-07	-378	01
6712047-19	53-60-00-07	-391	01
6712047-20	53-60-00-07	-248	01
6712047-20	53-60-00-07	-377	01
6712047-20	53-60-00-07	-390	01
6712047-25	53-60-00-07	-304	02
6712047-26	53-60-00-07	-014	01
6712047-26	53-60-00-07	-176	01
6712047-26	53-60-00-07	-259	01
6712047-26	53-60-00-07	-315	01
6712047-38	53-60-00-07	-091	01
6712047-38	53-60-00-07	-162	03
6712047-38	53-60-00-07	-165	02
6712047-38	53-60-00-07	-225	01
6712047-38	53-60-00-07	-237	01
6712047-38	53-60-00-07	-302	01
6712047-40	53-60-00-07	-090	01
6712047-40	53-60-00-07	-161	03
6712047-40	53-60-00-07	-166	02
6712047-40	53-60-00-07	-226	01
6712047-40	53-60-00-07	-238	01
6712047-40	53-60-00-07	-303	01
6712047-47	53-60-00-07	-319	01
6712047-48	53-60-00-07	-320	01
6712047-51	53-60-00-07	-153	01
6712047-52	53-60-00-07	-152	01
6712047-53	53-60-00-07	-227	01
6712047-54	53-60-00-07	-228	01
6712047-55	53-60-00-07	-078	01
6712047-56	53-60-00-07	-001	01
6712047-56	53-60-00-07	-077	01
6712057-10	52-30-20-01	-095	02
6712057-14	52-30-20-01	-008	01
6712057-16	52-30-20-01	-080	08
6712057-17	52-30-20-01	-076	08
6712057-18	52-30-20-01	-079	08
6712057-2	52-30-20-01	-092	01
6712057-4	52-30-20-01	-093	01
6712057-6	52-30-20-01	-100	03
6712057-8	52-30-20-01	-094	01
6712069-2	52-30-00-01	-009	01
6712069-3	52-30-00-01	-010	01
6712069-4	52-30-00-01	-001	02
6712073-10	52-30-20-01	-107	08
6712073-10	53-60-05-01	-019	08
6712073-9	52-30-20-01	-106	08
6712073-9	53-60-05-01	-018	08
6712077-2	53-60-05-02	-123	01
6712077-3	53-60-05-02	-125	01
6712077-4	53-60-05-02	-121	01
6712077-5	53-60-05-02	-126	01
6712077-6	53-60-05-02	-127	02
6712077-7	53-60-05-02	-124	01
6712077-8	53-60-05-02	-122	01
6712091-10	53-60-02-04	-011	01

© Cessna Aircraft Company

PART NUMBER	CH SEC SUBJ FIG	ITEM	REQ
6712091-3	53-60-02-04	-002	01
6712091-4	53-60-02-04	-003	01
6712091-5	53-60-02-04	-009	02
6712091-6	53-60-02-04	-001	02
6712091-9	53-60-02-04	-010	01
6712105-10	53-60-01-13	-022	01
6712105-14	53-60-01-13	-014	01
6712105-15	53-60-01-13	-005	01
6712105-16	53-60-01-13	-006	01
6712105-17	53-60-01-13	-015	01
6712105-23	53-60-01-13	-021	01
6712105-24	53-60-01-13	-023	01
6712161-23	53-60-02-01	-004	02
6712161-24	53-60-02-01	-005	02
6712161-25	53-60-02-01	-006	02
6712161-26	53-60-02-01	-002	01
6712161-27	53-60-02-01	-008	01
6712161-33	53-60-02-01	-003	02
6712161-34	53-60-02-01	-007	02
6712161-36	53-60-02-01	-020	01
6712161-38	53-60-02-01	-018	02
6712161-41	53-60-02-01	-019	01
6712161-42	53-60-02-01	-001	01
6712165-22	53-60-02-01	-027	01
6712165-27	53-60-02-01	-025	01
6712165-30	53-60-02-01	-026	01
6712165-36	53-60-02-01	-023	01
6712167-3	53-60-02-01	-021	02
6712167-4	53-60-02-01	-022	02
6712205-2	53-60-01-13	-041	02
6712221-1	53-38-00-01	-015	01
6712221-17	53-38-00-01	-020	02
6712221-18	53-38-00-01	-012	02
6712221-19	53-38-00-01	-019	02
6712221-2	53-38-00-01	-016	01
6712221-25	53-60-01-13	-035	02
6712221-26	53-60-01-13	-036	08
6712221-27	53-38-00-01	-013	01
6712221-28	53-38-00-01	-014	01
6712221-3	53-38-00-01	-024	01
6712221-31	53-38-00-01	-010	01
6712221-32	53-38-00-01	-011	01
6712221-33	53-38-00-01	-018	01
6712221-35	53-38-00-01	-027	01
6712221-36	53-38-00-01	-028	01
6712221-37	53-38-00-01	-022	01
6712221-38	53-38-00-01	-023	01
6712221-4	53-38-00-01	-025	01
6712221-40	53-38-00-01	-001	01
6712221-9	53-38-00-01	-032	01
6712224-11	21-27-00-01	-011	04
6712224-12	21-27-00-01	-012	02
6712224-13	21-27-00-01	-007	01
6712224-9	21-27-00-01	-010	02
6712225-1	53-38-00-01	-026	01
6712225-2	53-38-00-01	-033	01
6712225-3	53-38-00-01	-004	01
6712307-103	53-60-01-07	-035	01
6712307-104	53-60-01-07	-036	01
6712307-105	53-60-01-07	-085	01
6712307-106	53-60-01-07	-086	01
6712307-107	53-60-01-07	-087	01

PART NUMBER	CH SEC SUBJ FIG	ITEM	REQ
6712307-108	53-60-01-07	-088	01
6712307-110	53-60-01-07	-117	01
6712307-111	53-60-01-07	-004	01
6712307-112	53-60-01-07	-005	01
6712307-113	53-60-01-07	-093	01
6712307-114	53-60-01-07	-094	01
6712307-115	53-60-01-07	-089	01
6712307-116	53-60-01-07	-090	01
6712307-117	53-60-01-07	-110	01
6712307-118	53-60-01-07	-111	01
6712307-119	53-60-01-07	-108	01
6712307-120	53-60-01-07	-109	01
6712307-121	53-60-01-07	-033	01
6712307-122	53-60-01-07	-034	01
6712307-125	53-60-01-07	-002	01
6712307-127	53-60-01-07	-003	02
6712307-128	53-60-01-07	-075	04
6712307-129	53-60-01-07	-008	01
6712307-130	53-60-01-07	-009	01
6712307-131	53-60-01-07	-013	01
6712307-132	53-60-01-07	-014	01
6712307-136	53-60-01-07	-078	01
6712307-137	53-60-01-07	-037	01
6712307-138	53-60-01-07	-038	01
6712307-139	53-60-01-07	-097	01
6712307-140	53-60-01-07	-098	01
6712307-149	53-60-01-07	-095	01
6712307-150	53-60-01-07	-096	01
6712307-153	53-60-01-07	-118	01
6712307-155	53-60-01-07	-112	01
6712307-156	53-60-01-07	-113	01
6712307-157	53-60-01-07	-114	02
6712307-161	53-60-01-07	-076	01
6712307-162	53-60-01-07	-077	01
6712307-163	53-60-01-07	-106	01
6712307-164	53-60-01-07	-107	01
6712307-165	53-60-01-07	-023	01
6712307-167	53-60-01-07	-091	01
6712307-168	53-60-01-07	-092	01
6712307-83	53-60-01-07	-104	01
6712307-84	53-60-01-07	-105	01
6712307-85	53-60-01-07	-027	01
6712307-86	53-60-01-07	-028	01
6712307-88	53-60-01-07	-024	01
6712307-95	53-60-01-07	-029	01
6712307-96	53-60-01-07	-030	01
6712307-97	53-60-01-07	-025	01
6712307-98	53-60-01-07	-026	01
6712314-6	53-60-01-13	-004	01
6712320-10	53-60-03-01	-012	01
6712320-11	53-60-03-01	-017	01
6712320-12	53-60-03-01	-018	01
6712320-13	53-60-03-01	-021	01
6712320-14	53-60-03-01	-022	01
6712320-15	53-60-03-01	-025	01
6712320-16	53-60-03-01	-026	01
6712320-17	53-60-03-01	-031	01
6712320-18	53-60-03-01	-032	01
6712320-19	53-60-03-01	-005	01
6712320-20	53-60-03-01	-006	01
6712320-21	53-60-03-01	-009	01
6712320-22	53-60-03-01	-010	01

© Cessna Aircraft Company

PART NUMBER	CH SEC SUBJ FIG	ITEM	REQ
6712320-23	53-60-03-01	-013	01
6712320-24	53-60-03-01	-014	01
6712320-25	53-60-03-01	-019	01
6712320-26	53-60-03-01	-020	01
6712320-27	53-60-03-01	-023	01
6712320-28	53-60-03-01	-024	01
6712320-29	53-60-03-01	-027	01
6712320-3	53-60-03-01	-001	01
6712320-30	53-60-03-01	-028	01
6712320-33	53-60-03-01	-015	01
6712320-34	53-60-03-01	-016	01
6712320-35	53-60-03-01	-033	01
6712320-36	53-60-03-01	-034	01
6712320-4	53-60-03-01	-002	01
6712320-5	53-60-03-01	-003	01
6712320-6	53-60-03-01	-004	01
6712320-7	53-60-03-01	-007	01
6712320-8	53-60-03-01	-008	01
6712320-9	53-60-03-01	-011	01
6712321-12	53-60-03-02	-030	01
6712321-19	53-60-03-02	-005	01
6712321-20	53-60-03-02	-006	01
6712321-23	53-60-03-02	-015	01
6712321-24	53-60-03-02	-016	01
6712321-28	53-60-03-02	-031	01
6712321-3	53-60-03-02	-003	01
6712321-30	53-60-03-02	-035	01
6712321-32	53-60-03-02	-040	01
6712321-33	53-60-03-02	-021	01
6712321-4	53-60-03-02	-004	01
6712321-42	53-60-03-02	-032	01
6712321-43	53-60-03-02	-013	01
6712321-46	53-60-03-02	-012	01
6712321-49	53-60-03-02	-001	01
6712321-50	53-60-03-02	-002	01
6712321-54	53-60-03-02	-034	01
6712321-8	53-60-03-02	-014	01
6712324-11	53-60-05-03	-017	02
6712324-17	53-60-05-03	-009	01
6712324-18	53-60-05-03	-010	01
6712324-19	53-60-05-03	-002	01
6712324-20	53-60-05-03	-003	01
6712324-21	53-60-05-03	-004	01
6712324-22	53-60-05-03	-001	01
6712328-2	53-60-05-03	-020	NP
6712328-3	53-60-05-03	-021	NP
6712328-4	53-60-05-03	-022	01
6712340-10	53-60-01-01	-023	01
6712340-11	53-60-01-01	-020	01
6712340-12	53-60-01-01	-021	01
6712340-13	53-60-01-01	-018	01
6712340-14	53-60-01-01	-019	01
6712340-15	53-60-01-01	-016	01
6712340-16	53-60-01-01	-017	01
6712340-17	53-60-01-01	-009	01
6712340-22	53-60-01-01	-103	01
6712340-30	53-60-01-01	-002	01
6712340-31	53-60-01-01	-010	01
6712340-32	53-60-01-01	-011	01
6712340-33	53-60-01-01	-014	01
6712340-34	53-60-01-01	-015	01
6712340-35	53-60-01-01	-001	01
6712340-38	53-60-01-01	-029	01
6712340-39	53-60-01-01	-028	01
6712340-4	53-60-01-01	-102	01
6712340-44	53-60-01-01	-034	01
6712340-45	53-60-01-01	-033	01
6712340-46	53-60-01-01	-006	01
6712340-47	53-60-01-01	-005	01
6712340-49	53-60-01-01	-037	01
6712340-5	53-60-01-01	-024	01
6712340-54	53-60-01-01	-101	01
6712340-55	53-60-01-01	-100	01
6712340-6	53-60-01-01	-025	01
6712340-7	53-60-01-01	-095	01
6712340-8	53-60-01-01	-096	01
6712340-9	53-60-01-01	-022	01
6712341-11	53-60-01-02	-003	01
6712341-19	53-60-01-02	-014	01
6712341-2	53-60-01-02	-100	01
6712341-20	53-60-01-02	-015	01
6712341-21	53-60-01-02	-018	01
6712341-22	53-60-01-02	-019	01
6712341-29	53-60-01-02	-026	01
6712341-30	53-60-01-02	-027	01
6712341-31	53-60-01-02	-005	01
6712341-32	53-60-01-02	-006	01
6712341-34	53-60-01-01	-004	02
6712341-34	53-60-01-02	-004	02
6712341-34	53-60-01-03	-004	02
6712341-34	53-60-01-05	-094	02
6712341-34	53-60-01-06	-105	02
6712341-36	53-60-01-02	-101	01
6712341-37	53-60-01-02	-002	01
6712341-38	53-60-01-02	-001	01
6712341-45	53-60-01-02	-033	01
6712341-46	53-60-01-02	-034	01
6712341-47	53-60-01-02	-028	01
6712341-48	53-60-01-02	-029	01
6712341-55	53-60-01-02	-023	03
6712341-56	53-60-01-02	-022	03
6712341-57	53-60-01-02	-009	02
6712341-58	53-60-01-02	-030	01
6712341-59	53-60-01-02	-010	01
6712341-60	53-60-01-02	-011	01
6712341-61	53-60-01-02	-080	02
6712341-63	53-60-01-02	-024	01
6712341-64	53-60-01-02	-025	01
6712342-2	53-60-01-03	-002	01
6712342-23	53-60-01-03	-19	01
6712342-24	53-60-01-03	-020	01
6712342-25	53-60-01-03	-017	01
6712342-26	53-60-01-03	-018	01
6712342-29	53-60-01-03	-015	01
6712342-30	53-60-01-03	-016	01
6712342-37	53-60-01-01	-003	01
6712342-37	53-60-01-03	-003	01
6712342-49	53-60-01-03	-010	01
6712342-50	53-60-01-03	-011	01
6712342-53	53-60-01-03	-035	01
6712342-54	53-60-01-03	-036	01
6712342-55	53-60-01-03	-095	01
6712342-56	53-60-01-03	-096	01
6712342-63	53-60-01-03	-014	02

© Cessna Aircraft Company

PART NUMBER	CH SEC SUBJ FIG	ITEM	REQ
6712342-67	53-60-01-03	-033	01
6712342-68	53-60-01-03	-034	01
6712342-69	53-60-01-03	-031	01
6712342-7	53-60-01-03	-100	01
6712342-70	53-60-01-03	-032	01
6712342-71	53-60-01-03	-029	01
6712342-72	53-60-01-03	-030	01
6712342-8	53-60-01-03	-001	01
6712342-81	53-60-01-03	-006	01
6712342-82	53-60-01-03	-007	01
6712342-88	53-60-01-03	-101	01
6712342-88	53-60-01-05	-005	01
6712342-89	53-60-01-03	-104	01
6712342-89	53-60-01-05	-006	01
6712342-9	53-60-01-03	-102	01
6712342-90	53-60-01-03	-103	01
6712342-90	53-60-01-05	-004	01
6712343-13	53-60-01-04	-103	01
6712343-14	53-60-01-04	-104	01
6712343-15	53-60-01-04	-079	01
6712343-16	53-60-01-04	-080	01
6712343-17	53-60-01-04	-077	01
6712343-18	53-60-01-04	-078	01
6712343-19	53-60-01-04	-075	01
6712343-2	53-60-01-04	-108	01
6712343-20	53-60-01-04	-076	01
6712343-21	53-60-01-04	-023	01
6712343-22	53-60-01-04	-032	01
6712343-23	53-60-01-04	-022	01
6712343-24	53-60-01-04	-031	01
6712343-25	53-60-01-04	-019	01
6712343-26	53-60-01-04	-028	01
6712343-27	53-60-01-04	-015	01
6712343-28	53-60-01-04	-025	01
6712343-29	53-60-01-04	-013	02
6712343-3	53-60-01-04	-109	01
6712343-30	53-60-01-04	-001	01
6712343-31	53-60-01-04	-002	01
6712343-4	53-60-01-04	-105	02
6712343-41	53-60-01-04	-014	02
6712343-42	53-60-01-04	-024	01
6712343-43	53-60-01-04	-005	01
6712343-44	53-60-01-04	-006	01
6712343-50	53-60-01-04	-003	01
6712343-52	53-60-01-04	-004	02
6712343-53	53-60-01-04	-007	01
6712343-54	53-60-01-04	-008	01
6712343-55	53-60-01-04	-009	01
6712343-56	53-60-01-04	-010	01
6712344-13	53-60-01-05	-024	01
6712344-14	53-60-01-05	-025	01
6712344-15	53-60-01-05	-028	01
6712344-16	53-60-01-05	-029	01
6712344-17	53-60-01-05	-030	01
6712344-18	53-60-01-05	-031	01
6712344-19	53-60-01-05	-032	01
6712344-2	53-60-01-05	-001	01
6712344-20	53-60-01-05	-033	01
6712344-22	53-60-01-05	-075	01
6712344-23	53-60-01-05	-037	01
6712344-24	53-60-01-05	-076	01
6712344-25	53-60-01-05	-092	01
6712344-26	53-60-01-05	-080	01
6712344-28	53-60-01-05	-077	01
6712344-3	53-60-01-05	-003	01
6712344-30	53-60-01-05	-083	01
6712344-4	53-60-01-05	-023	02
6712344-40	53-60-01-05	-086	01
6712344-41	53-60-01-05	-007	01
6712344-43	53-60-01-05	-093	01
6712344-44	53-60-01-05	-090	01
6712344-45	53-60-01-05	-095	01
6712344-46	53-60-01-05	-089	01
6712344-47	53-60-01-05	-036	01
6712344-53	53-60-01-05	-002	01
6712345-2	53-60-01-06	-028	01
6712345-27	53-60-01-06	-011	01
6712345-28	53-60-01-06	-079	01
6712345-29	53-60-01-06	-004	01
6712345-3	53-60-01-06	-103	01
6712345-30	53-60-01-06	-084	01
6712345-31	53-60-01-06	-001	02
6712345-32	53-60-01-06	-085	01
6712345-34	53-60-01-06	-102	01
6712345-35	53-60-01-06	-104	01
6712345-36	53-60-01-06	-030	01
6712345-40	53-60-01-06	-029	01
6712345-41	53-60-01-06	-086	01
6712345-42	53-60-01-06	-091	01
6712345-43	53-60-01-06	-088	01
6712345-44	53-60-01-06	-087	01
6712345-45	53-60-01-06	-008	01
6712345-46	53-60-01-06	-094	01
6712345-47	53-60-01-06	-007	01
6712345-48	53-60-01-06	-080	01
6712345-49	53-60-01-06	-106	01
6712345-50	53-60-01-06	-101	01
6712345-53	53-60-01-05	-091	01
6712345-53	53-60-01-06	-098	01
6712350-2	53-60-05-02	-119	01
6712350-4	53-60-05-02	-120	01
6712350-5	53-60-05-02	-116	01
6712350-6	53-60-05-02	-117	01
6712362-2	53-60-05-02	-018	01
6712363-2	53-60-05-02	-096	01
6712363-4	53-60-05-02	-118	01
6712363-5	53-60-05-02	-097	01
6712364-3	53-60-05-02	-015	01
6712365-3	53-60-05-02	-027	01
6712367-1	53-60-05-02	-102	01
6712367-2	53-60-05-02	-104	01
6712367-3	53-60-05-02	-090	01
6712367-4	53-60-05-02	-092	01
6712368-2	52-30-00-01	-041	01
6712368-2	53-60-05-02	-033	01
6712370-1	53-60-05-02	-098	02
6712370-11	53-60-05-02	-115	01
6712370-12	53-60-05-02	-114	01
6712370-14	53-60-05-02	-084	01
6712370-16	53-60-05-02	-085	01
6712370-17	53-60-05-02	-082	01
6712370-20	53-60-05-02	-110	01
6712370-23	53-60-05-02	-108	01
6712370-27	53-60-05-02	-001	01

© Cessna Aircraft Company

PART NUMBER	CH SEC SUBJ FIG	ITEM	REQ
6712370-28	53-60-05-02	-003	01
6712370-29	53-60-05-02	-004	01
6712370-32	53-60-05-02	-002	01
6712370-33	53-60-05-02	-017	01
6712370-36	53-60-05-02	-021	01
6712370-39	53-60-05-02	-023	01
6712370-42	53-60-05-02	-025	01
6712370-45	53-60-05-02	-028	02
6712370-46	53-60-05-02	-077	01
6712370-47	53-60-05-02	-076	01
6712370-48	53-60-05-02	-029	01
6712370-49	53-60-05-02	-030	01
6712370-54	53-60-05-02	-005	01
6712370-55	53-60-05-02	-006	01
6712370-56	53-60-05-02	-105	01
6712370-57	53-60-05-02	-086	01
6712370-59	53-60-05-02	-087	01
6712370-60	53-60-05-02	-089	01
6712370-61	53-60-05-02	-088	01
6712370-8	53-60-05-02	-113	01
6712370-9	53-60-05-02	-112	01
6712380-2	52-30-00-01	-022	01
6712380-3	52-30-00-01	-031	02
6712382-5	52-30-00-01	-018	01
6712382-6	52-30-00-01	-019	01
6712383-2	52-30-00-01	-035	08
6712383-3	52-30-00-01	-038	01
6712383-4	52-30-00-01	-039	01
6712383-5	52-30-00-01	-037	02
6712387-1	52-30-00-01	-004	01
6712387-3	52-30-00-01	-005	01
6712390-11	53-60-05-01	-004	01
6712390-13	53-60-05-01	-005	01
6712390-14	53-60-05-01	-015	01
6712390-3	53-60-05-01	-010	01
6712390-4	53-60-05-01	-003	01
6712390-5	53-60-05-01	-009	01
6712390-6	53-60-05-01	-002	01
6712390-7	53-60-05-01	-001	01
6712390-7	53-60-05-01	-008	01
6712390-8	53-60-05-01	-012	01
6712390-9	53-60-05-01	-011	01
6712391-12	52-30-20-01	-035	01
6712391-15	52-30-20-01	-005	01
6712391-6	52-30-20-01	-075	08
6712391-8	21-50-10-01	-018	02
6712391-8	52-30-20-01	-031	02
6712391-9	52-30-20-01	-081	08
6712392-10	52-30-20-01	-023	02
6712392-12	52-30-20-01	-025	01
6712392-14	52-30-20-01	-024	01
6712392-2	52-30-20-01	-019	01
6712392-4	52-30-20-01	-020	01
6712392-6	52-30-20-01	-021	01
6712392-8	52-30-20-01	-022	01
6712393-15	52-30-20-01	-091	02
6712393-16	52-30-20-01	-090	02
6712393-17	52-30-20-01	-089	02
6712393-2	52-30-20-01	-007	01
6712393-21	52-30-20-01	-013	01
6712393-22	52-30-20-01	-088	02
6712393-23	52-30-20-01	-015	01
6712393-5	52-30-20-01	-014	01
6712401-10	53-30-03-02	-035	08
6712401-11	53-30-03-02	-036	18
6712401-17	53-30-03-02	-007	01
6712401-19	53-30-03-02	-039	02
6712401-20	53-30-03-02	-015	03
6712401-21	53-30-03-02	-032	03
6712401-22	53-30-03-02	-014	04
6712401-23	53-30-03-02	-037	04
6712401-26	53-30-03-02	-016	01
6712401-31	53-30-03-02	-038	01
6712401-33	53-30-03-02	-008	01
6712401-38	53-30-03-02	-029	01
6712401-39	53-30-03-02	-028	01
6712401-5	53-30-03-02	-004	01
6712401-9	53-30-03-02	-005	01
6712403-12	53-30-03-04	-008	01
6712403-13	53-30-03-04	-009	01
6712403-18	53-30-03-04	-017	01
6712403-25	53-30-03-04	-075	01
6712403-29	53-30-03-04	-081	02
6712403-30	53-30-03-04	-084	01
6712403-31	53-30-03-04	-083	01
6712403-33	53-30-03-04	-077	01
6712403-34	53-30-03-04	-078	01
6712403-35	53-30-03-04	-079	01
6712403-37	53-30-03-04	-001	01
6712403-38	53-30-03-04	-002	01
6712403-39	53-30-03-04	-006	01
6712403-41	53-30-03-04	-080	01
6712403-42	53-30-03-04	-082	01
6712403-43	53-30-03-04	-003	01
6712403-45	53-30-03-04	-007	01
6712403-7	53-30-03-04	-004	01
6712403-8	53-30-03-04	-005	01
6712408-1	53-30-03-02	-017	01
6712408-10	53-30-03-02	-033	03
6712408-13	53-30-03-02	-034	01
6712408-14	53-30-03-02	-031	01
6712408-17	53-30-03-02	-019	01
6712408-18	53-30-03-02	-023	01
6712408-19	53-30-03-02	-020	01
6712408-20	53-30-03-02	-021	01
6712408-21	53-30-03-02	-022	01
6712408-22	53-30-03-02	-024	01
6712408-4	53-30-03-02	-018	01
6712408-6	53-30-03-02	-010	02
6712408-7	53-30-03-02	-009	02
6712408-8	53-30-03-02	-013	02
6712408-9	53-30-03-02	-030	03
6712420-11	53-60-01-08	-310	02
6712420-12	53-60-01-08	-309	02
6712420-15	53-60-01-08	-014	01
6712420-16	53-60-01-08	-012	02
6712420-17	53-60-01-08	-010	02
6712420-18	53-60-01-08	-009	02
6712420-19	53-60-01-08	-077	04
6712420-20	53-60-01-08	-076	04
6712420-23	53-60-01-08	-238	01
6712420-24	53-60-01-08	-239	01
6712420-25	53-60-01-08	-090	NP
6712420-26	53-60-01-08	-092	NP

© Cessna Aircraft Company

PART NUMBER	CH SEC SUBJ FIG	ITEM	REQ
6712420-29	53-60-01-08	-011	02
6712420-30	53-60-01-08	-013	01
6712420-33	53-60-01-08	-078	01
6712420-34	53-60-01-08	-079	01
6712420-35	53-60-01-08	-080	01
6712420-36	53-60-01-08	-081	01
6712420-37	53-60-01-08	-156	02
6712420-37	53-60-01-08	-225	03
6712420-38	53-60-01-08	-157	02
6712420-38	53-60-01-08	-226	03
6712420-39	53-60-01-08	-160	04
6712420-39	53-60-01-08	-232	03
6712420-40	53-60-01-08	-161	04
6712420-40	53-60-01-08	-231	03
6712420-41	53-60-01-08	-150	02
6712420-42	53-60-01-08	-151	02
6712420-43	53-60-01-08	-311	01
6712420-44	53-60-01-08	-312	01
6712420-45	53-60-01-08	-094	02
6712420-46	53-60-01-08	-075	02
6712420-47	53-60-01-08	-302	01
6712420-48	53-60-01-08	-303	01
6712420-49	53-60-01-08	-300	02
6712420-5	53-60-01-08	-001	01
6712420-50	53-60-01-08	-301	02
6712420-51	53-60-01-08	-096	02
6712420-52	53-60-01-08	-091	02
6712420-53	53-60-01-08	-093	02
6712420-6	53-60-01-08	-002	01
6712420-7	53-60-01-08	-003	01
6712420-8	53-60-01-08	-004	01
6712420-9	53-60-01-08	-095	NP
6712421-12	53-60-01-13	-013	02
6712421-13	53-60-01-13	-020	01
6712421-3	53-60-01-13	-016	01
6712421-4	53-60-01-13	-008	01
6712422-1	53-60-01-13	-024	NP
6712422-13	53-60-01-13	-042	01
6712422-14	53-60-01-13	-043	01
6712422-15	53-60-01-13	-034	01
6712422-16	53-60-01-13	-025	NP
6712422-17	53-60-01-13	-026	NP
6712422-18	53-60-01-13	-026A	01
6712422-5	53-60-01-13	-044	01
6712422-6	53-60-01-13	-045	01
6712422-7	53-60-01-13	-037	01
6712422-8	53-60-01-13	-038	01
6712427-2	53-60-01-13	-027	01
6712435-10	53-60-05-02	-008	01
6712435-11	53-60-05-02	-022	01
6712435-13	53-60-05-02	-024	01
6712435-14	53-60-05-02	-031	01
6712435-16	53-60-05-02	-032	01
6712435-19	53-60-05-02	-083	01
6712435-2	53-60-05-02	-019	01
6712435-20	53-60-05-02	-111	01
6712435-21	53-60-05-02	-016	01
6712435-23	53-60-05-02	-020	01
6712435-24	53-60-05-02	-109	01
6712435-3	53-60-05-02	-014	01
6712435-4	53-60-05-02	-026	01
6712435-5	53-60-05-02	-091	01
6712435-6	53-60-05-02	-103	01
6712435-7	53-60-05-02	-075	01
6712435-9	53-60-05-02	-007	01
6712442-11	53-60-01-03	-080	01
6712442-12	53-60-01-03	-081	01
6712442-13	53-60-01-03	-085	01
6712442-14	53-60-01-03	-086	01
6712442-15	53-60-01-03	-090	01
6712442-16	53-60-01-03	-091	01
6712442-17	53-60-01-03	-075	01
6712442-18	53-60-01-03	-076	01
6712442-2	53-60-01-03	-099	01
6712442-21	53-60-01-03	-005	02
6712442-22	53-60-01-03	-037	01
6712442-23	53-60-01-03	-023	01
6712442-24	53-60-01-03	-024	01
6712442-3	53-60-01-03	-027	01
6712442-4	53-60-01-03	-028	01
6712443-13	53-60-01-04	-098	01
6712443-14	53-60-01-04	-099	01
6712443-15	53-60-01-04	-093	01
6712443-16	53-60-01-04	-094	01
6712443-17	53-60-01-04	-088	01
6712443-18	53-60-01-04	-089	01
6712443-19	53-60-01-04	-083	01
6712443-20	53-60-01-04	-084	01
6712443-3	53-60-01-04	-106	01
6712443-4	53-60-01-04	-107	01
6712444-10	53-60-01-05	-019	01
6712444-11	53-60-01-05	-011	01
6712444-12	53-60-01-05	-012	01
6712444-2	53-60-01-05	-008	01
6712444-5	53-60-01-05	-016	01
6712444-6	53-60-01-05	-017	01
6712444-7	53-60-01-05	-009	01
6712444-8	53-60-01-05	-010	01
6712444-9	53-60-01-05	-018	01
6712445-10	53-60-01-06	-023	01
6712445-11	53-60-01-06	-015	01
6712445-12	53-60-01-06	-016	01
6712445-13	53-60-01-06	-013	01
6712445-14	53-60-01-06	-014	01
6712445-15	53-60-01-06	-020	01
6712445-16	53-60-01-06	-021	01
6712445-2	53-60-01-06	-081	01
6712445-4	53-60-01-06	-097	01
6712445-5	53-60-01-06	-027	01
6712445-5	53-60-01-06	-075	01
6712445-7	53-60-01-06	-012	01
6712445-8	53-60-01-06	-078	01
6712445-9	53-60-01-06	-022	01
6712446-10	53-60-01-09	-016	01
6712446-11	53-60-01-09	-006	01
6712446-12	53-60-01-09	-007	01
6712446-13	53-60-01-09	-011	02
6712446-13	53-60-01-09	-089	01
6712446-13	53-60-01-09	-119	01
6712446-14	53-60-01-09	-012	02
6712446-14	53-60-01-09	-090	01
6712446-14	53-60-01-09	-120	01
6712446-19	53-60-01-09	-009	01
6712446-19	53-60-01-09	-035	01

© Cessna Aircraft Company

PART NUMBER	CH SEC SUBJ FIG	ITEM	REQ
6712446-2	53-60-01-09	-008	01
6712446-20	53-60-01-09	-010	01
6712446-20	53-60-01-09	-036	01
6712446-21	53-60-01-09	-004	01
6712446-22	53-60-01-09	-005	01
6712446-5	53-60-01-09	-002	01
6712446-6	53-60-01-09	-003	01
6712446-7	53-60-01-09	-017	01
6712446-8	53-60-01-09	-018	01
6712446-9	53-60-01-09	-015	01
6712447-10	53-60-01-09	-034	01
6712447-10	53-60-01-09	-096	02
6712447-11	53-60-01-09	-023	01
6712447-12	53-60-01-09	-024	01
6712447-14	53-60-01-09	-026	01
6712447-3	53-60-01-09	-029	01
6712447-4	53-60-01-09	-030	01
6712447-5	53-60-01-09	-031	01
6712447-5	53-60-01-09	-039	01
6712447-6	53-60-01-09	-032	01
6712447-6	53-60-01-09	-040	01
6712447-7	53-60-01-09	-041	01
6712447-8	53-60-01-09	-042	01
6712447-9	53-60-01-09	-033	01
6712447-9	53-60-01-09	-095	02
6712448-10	53-60-01-09	-080	01
6712448-11	53-60-01-09	-077	01
6712448-12	53-60-01-09	-078	01
6712448-13	53-60-01-09	-093	01
6712448-14	53-60-01-09	-094	01
6712448-15	53-60-01-09	-091	01
6712448-16	53-60-01-09	-092	01
6712448-19	53-60-01-09	-075	01
6712448-20	53-60-01-09	-076	01
6712448-5	53-60-01-09	-083	01
6712448-6	53-60-01-09	-084	01
6712448-7	53-60-01-09	-081	01
6712448-8	53-60-01-09	-082	01
6712448-9	53-60-01-09	-079	01
6712449-11	53-60-01-09	-115	01
6712449-12	53-60-01-09	-116	01
6712449-13	53-60-01-09	-111	01
6712449-14	53-60-01-09	-112	01
6712449-15	53-60-01-09	-105	01
6712449-16	53-60-01-09	-106	01
6712449-17	53-60-01-09	-117	01
6712449-18	53-60-01-09	-118	01
6712449-3	53-60-01-09	-101	01
6712449-4	53-60-01-09	-102	01
6712449-5	53-60-01-09	-103	01
6712449-6	53-60-01-09	-104	01
6712449-7	53-60-01-09	-113	01
6712449-8	53-60-01-09	-114	01
6712450-10	53-60-01-11	-016	01
6712450-11	53-60-01-11	-011	01
6712450-12	53-60-01-11	-012	01
6712450-5	53-60-01-11	-009	01
6712450-6	53-60-01-11	-010	01
6712450-7	53-60-01-11	-013	01
6712450-8	53-60-01-11	-014	01
6712450-9	53-60-01-11	-015	01
6712451-10	53-60-01-11	-036	01
6712451-11	53-60-01-11	-029	01
6712451-12	53-60-01-11	-030	01
6712451-13	53-60-01-11	-024	01
6712451-14	53-60-01-11	-025	01
6712451-15	53-60-01-11	-028A	02
6712451-2	53-60-01-11	-028	02
6712451-3	53-60-01-11	-031	01
6712451-4	53-60-01-11	-032	01
6712451-5	53-60-01-11	-022	01
6712451-6	53-60-01-11	-023	01
6712451-9	53-60-01-11	-035	01
6712452-3	53-60-01-11	-085	01
6712452-4	53-60-01-11	-086	01
6712452-5	53-60-01-11	-081	01
6712452-6	53-60-01-11	-082	01
6712452-7	53-60-01-11	-079	01
6712452-8	53-60-01-11	-080	01
6712454-10	53-60-01-07	-020	01
6712454-11	53-60-01-07	-015	01
6712454-12	53-60-01-07	-016	01
6712454-13	53-60-01-07	-006	01
6712454-14	53-60-01-07	-007	01
6712454-15	53-60-01-07	-115	01
6712454-16	53-60-01-07	-116	01
6712454-2	53-60-01-07	-001	01
6712454-5	53-60-01-07	-021	01
6712454-6	53-60-01-07	-022	01
6712454-7	53-60-01-07	-017	01
6712454-8	53-60-01-07	-018	01
6712454-9	53-60-01-07	-019	01
6712456-10	53-60-01-10	-113	01
6712456-13	53-60-01-10	-085	01
6712456-14	53-60-01-10	-086	01
6712456-15	53-60-01-10	-007	01
6712456-16	53-60-01-10	-008	01
6712456-17	53-60-01-10	-081	01
6712456-18	53-60-01-10	-082	01
6712456-21	53-60-01-10	-079	01
6712456-22	53-60-01-10	-080	01
6712456-25	53-60-01-10	-027	01
6712456-26	53-60-01-10	-028	01
6712456-27	53-60-01-10	-034	01
6712456-28	53-60-01-10	-035	01
6712456-31	53-60-01-10	-075	01
6712456-32	53-60-01-10	-076	01
6712456-33	53-60-01-10	-003	01
6712456-34	53-60-01-10	-004	01
6712456-35	53-60-01-10	-077	01
6712456-36	53-60-01-10	-078	01
6712456-37	53-60-01-10	-001	01
6712456-38	53-60-01-10	-002	01
6712456-39	53-60-01-10	-005	01
6712456-40	53-60-01-10	-006	01
6712456-41	53-60-01-10	-011	01
6712456-42	53-60-01-10	-012	01
6712456-43	53-60-01-10	-040	01
6712456-44	53-60-01-10	-041	01
6712456-45	53-60-01-10	-092	01
6712456-46	53-60-01-10	-093	01
6712456-47	53-60-01-10	-018	01
6712456-48	53-60-01-10	-019	01
6712456-5	53-60-01-10	-118	01

© Cessna Aircraft Company

PART NUMBER	CH SEC SUBJ FIG	ITEM	REQ
6712456-6	53-60-01-10	-119	01
6712456-7	53-60-01-10	-104	01
6712456-8	53-60-01-10	-105	01
6712456-9	53-60-01-10	-112	01
6712457-10	53-60-00-07	-002	01
6712457-10	53-60-00-07	-075	01
6712457-11	53-60-00-07	-089	01
6712457-11	53-60-00-07	-160	03
6712457-11	53-60-00-07	-163	02
6712457-11	53-60-00-07	-235	01
6712457-11	53-60-00-07	-300	01
6712457-12	53-60-00-07	-088	01
6712457-12	53-60-00-07	-159	03
6712457-12	53-60-00-07	-164	02
6712457-12	53-60-00-07	-236	01
6712457-12	53-60-00-07	-301	01
6712457-13	53-60-00-07	-003	01
6712457-17	53-60-00-07	-151	01
6712457-18	53-60-00-07	-150	01
6712457-19	53-60-00-07	-079	01
6712457-20	53-60-00-07	-080	01
6712457-21	53-60-00-07	-092	01
6712457-22	53-60-00-07	-093	01
6712457-23	53-60-00-07	-379	NP
6712457-24	53-60-00-07	-392	NP
6712457-25	53-60-00-07	-321	NP
6712457-27	53-60-00-07	-227A	01
6712457-28	53-60-00-07	-225A	01
6712457-29	53-60-00-07	-379A	01
6712457-3	53-60-00-07	-376	01
6712457-3	53-60-00-07	-389	01
6712457-30	53-60-00-07	-392A	01
6712457-31	53-60-00-07	-321A	01
6712457-4	53-60-00-07	-247	01
6712457-4	53-60-00-07	-375	01
6712457-4	53-60-00-07	-388	01
6712457-5	53-60-00-07	-317	01
6712457-6	53-60-00-07	-318	01
6712457-9	53-60-00-07	-076	01
6712458-1	53-60-03-02	-028	01
6712458-2	53-60-03-02	-010	01
6712458-3	53-60-03-02	-007	01
6712458-4	53-60-03-02	-008	01
6712458-5	53-60-03-02	-009	01
6712458-6	53-60-03-02	-011	01
6712458-7	53-60-03-02	-029	01
6712458-8	53-60-03-02	-033	01
6712458-9	53-60-03-02	-041	01
6712459-10	53-60-01-01	-076	01
6712459-11	53-60-01-01	-099	02
6712459-3	53-60-01-01	-080	01
6712459-4	53-60-01-01	-081	01
6712459-5	53-60-01-01	-090	01
6712459-6	53-60-01-01	-091	01
6712459-7	53-60-01-01	-085	01
6712459-8	53-60-01-01	-086	01
6712459-9	53-60-01-01	-075	01
6712460-10	53-60-01-02	-091	01
6712460-11	53-60-01-02	-081	01
6712460-12	53-60-01-02	-082	01
6712460-3	53-60-01-02	-075	01
6712460-4	53-60-01-02	-076	01
6712460-5	53-60-01-02	-085	01
6712460-6	53-60-01-02	-086	01
6712460-7	53-60-01-02	-095	01
6712460-8	53-60-01-02	-096	01
6712460-9	53-60-01-02	-090	01
6712462-10	53-30-02-01	-005	01
6712462-11	53-30-02-01	-006	02
6712462-12	53-30-02-01	-009	01
6712462-13	53-30-02-01	-007	01
6712462-14	53-30-02-01	-017	01
6712462-2	53-30-02-01	-001	01
6712462-5	53-30-02-01	-002	01
6712462-6	53-30-02-01	-003	01
6712462-9	53-30-02-01	-004	01
6712463-2	53-60-01-12	-010	01
6712463-3	53-60-01-12	-018	01
6712463-4	53-60-01-12	-014	01
6712463-5	53-60-01-12	-004	01
6712463-6	53-60-01-12	-005	01
6712465-1	25-50-00-01	-254	01
6712465-10	24-60-00-01	-037	04
6712465-12	24-60-00-01	-050	01
6712465-19	24-60-00-01	-029	01
6712465-2	25-50-00-01	-255	01
6712465-22	24-60-00-01	-038	08
6712465-24	24-60-00-01	-024	01
6712465-25	24-60-00-01	-030	01
6712465-26	24-60-00-01	-031	01
6712465-29	24-60-00-01	-032	02
6712465-31	24-60-00-01	-033	02
6712465-4	24-60-00-01	-043	01
6712465-6	24-60-00-01	-045	01
6712465-8	24-60-00-01	-048	01
6712466-1	53-30-03-02	-002	01
6712466-2	53-30-03-02	-001	01
6712466-4	53-30-03-02	-003	01
6712521-1	53-60-01-13	-001	NP
6712521-2	53-60-01-13	-002	NP
6712521-3	53-60-01-13	-002A	01
6712523-1	53-60-01-13	-007	01
6712525-2	53-60-01-13	-009	NP
6712525-3	53-60-01-13	-010	NP
6712525-4	53-60-01-13	-010A	01
6712526-2	53-60-01-13	-032	NP
6712526-3	53-60-01-13	-033	NP
6712526-4	53-60-01-13	-033A	01
6712529-2	53-60-01-13	-028	NP
6712529-3	53-60-01-13	-029	01
6712530-2	53-60-01-13	-030	NP
6712530-3	53-60-01-13	-031	01
6712531-1	53-60-01-13	-003	01
6712601-4	49-10-15-01	-012	01
6712601-5	49-10-15-01	-006	01
6712601-6	49-10-15-01	-007	01
6712610-10	53-30-02-03	-172	01
6712610-13	53-30-02-03	-173	01
6712610-37	53-30-02-03	-077	01
6712611-17	53-30-02-03	-097	01
6712612-3	53-30-02-03	-091	01
6712612-4	53-30-02-03	-092	01
6712613-10	53-30-02-03	-001	01
6712620-11	52-40-33-01	-003	02

© Cessna Aircraft Company

PART NUMBER	CH SEC SUBJ FIG	ITEM	REQ
6712620-13	52-40-33-01	-005	01
6712620-15	52-40-33-01	-006	01
6712620-17	52-40-33-01	-011	01
6712620-18	52-40-33-01	-008	01
6712620-19	52-40-33-01	-004	01
6712620-22	52-40-33-01	-012	01
6712620-24	52-40-33-01	-013	01
6712620-26	52-40-33-01	-010	01
6712620-48	53-30-02-03	-161	01
6712620-53	53-30-02-03	-080	01
6712620-55	53-30-02-03	-150	01
6712620-56	53-30-02-03	-155	01
6712620-9	52-40-33-01	-001	01
6712625-17	53-30-02-04	-007	01
6712625-18	53-30-02-04	-008	01
6712625-21	53-30-02-04	-011	01
6712625-22	53-30-02-04	-012	01
6712640-4	53-30-02-03	-099	01
6712652-22	53-30-02-04	-017	01
6712652-23	53-30-02-04	-022	01
6712652-34	53-30-02-04	-082	01
6712652-41	53-30-02-04	-077	01
6712652-43	53-30-02-04	-024	01
6712652-45	53-30-02-04	-020	01
6712652-46	53-30-02-04	-014	01
6712652-48	53-30-02-04	-019	01
6712652-50	53-30-02-04	-002	01
6712652-51	53-30-02-04	-001	01
6712652-56	53-30-02-04	-086	01
6712652-61	53-30-02-04	-075	01
6712652-65	53-30-02-04	-027	01
6712652-67	53-30-02-04	-028	01
6713000-13	53-10-00-01	-001	02
6713000-14	53-10-00-01	-002	02
6713000-15	53-10-00-01	-003	01
6713000-16	53-10-00-01	-004	01
6713000-17	53-10-00-01	-005	01
6713000-18	53-10-00-01	-006	01
6713000-21	53-10-00-01	-007	01
6713000-22	53-10-00-01	-008	01
6713000-5	53-10-00-01	-009	02
6713000-6	53-10-00-01	-010	02
6713002-2	53-10-01-01	-001	01
6713002-3	53-10-01-01	-003	01
6713002-5	53-10-01-01	-001A	01
6713002-6	53-10-01-01	-003A	01
6713008-26	21-29-00-01	-010	01
6713030-13	53-10-01-01	-002	01
6713031-10	53-10-01-01	-007	01
6713031-11	53-10-01-01	-029	01
6713031-12	53-10-01-01	-030	01
6713031-15	53-10-01-01	-013	01
6713031-16	53-10-01-01	-014	01
6713031-17	53-10-01-01	-017	01
6713031-18	53-10-01-01	-018	01
6713031-19	53-10-01-01	-015	01
6713031-20	53-10-01-01	-016	01
6713031-21	53-10-01-01	-020	01
6713031-22	53-10-01-01	-021	01
6713031-25	53-10-01-01	-011	02
6713031-26	53-10-01-01	-012	01
6713031-30	53-10-01-01	-019	01

PART NUMBER	CH SEC SUBJ FIG	ITEM	REQ
6713031-32	53-10-01-01	-008	01
6713031-33	53-10-01-01	-009	01
6713031-34	53-10-01-01	-010	01
6713031-9	53-10-01-01	-006	01
6713032-10	53-10-01-02	-006	01
6713032-13	53-10-01-02	-004	01
6713032-14	53-10-01-02	-003	01
6713032-15	53-10-01-02	-001	01
6713032-16	53-10-01-02	-002	01
6713032-18	53-10-01-02	-005	01
6713032-9	53-10-01-02	-007	01
6713033-10	53-10-01-02	-014	01
6713033-11	53-10-01-02	-010	01
6713033-12	53-10-01-02	-011	01
6713033-15	53-10-01-02	-012	01
6713033-18	53-10-01-02	-009	01
6713033-21	53-10-01-02	-008	01
6713033-22	53-10-01-02	-013	01
6713045-1	32-20-00-02	-102	01
6713045-10	32-20-00-02	-085	01
6713045-11	32-20-00-02	-012	02
6713045-13	32-20-00-02	-091	02
6713045-13	52-10-03-01	-027	01
6713045-13	53-15-00-02	-029	01
6713045-13	53-15-00-02	-163	01
6713045-2	32-20-00-02	-103	01
6713045-20	52-40-37-01	-005	01
6713045-20	52-40-37-01	-154	01
6713045-21	52-40-37-01	-003	01
6713045-21	52-40-37-01	-152	01
6713045-22	52-40-37-01	-002	01
6713045-22	52-40-37-01	-151	01
6713045-5	32-20-00-02	-075	01
6713045-6	32-20-00-02	-076	01
6713045-8	32-20-00-02	-090	02
6713045-8	52-10-03-01	-026	01
6713045-8	53-15-00-02	-027	01
6713045-8	53-15-00-02	-161	01
6713045-9	32-20-00-02	-084	01
6713050-10	53-15-00-01	-004	01
6713050-5	53-15-00-02	-115	32
6713050-7	53-15-00-01	-001	03
6713050-9	53-15-00-01	-003	01
6713051-11	53-15-00-02	-031	01
6713051-111	53-15-00-02	-122	01
6713051-112	53-15-00-02	-038	01
6713051-113	53-15-00-02	-110	01
6713051-114	53-15-00-02	-199	01
6713051-121	53-15-00-02	-078	01
6713051-122	53-15-00-02	-168	01
6713051-13	53-15-00-02	-089	01
6713051-133	53-15-00-02	-032	01
6713051-134	53-15-00-02	-188	01
6713051-135	53-15-00-02	-083	01
6713051-136	53-15-00-02	-179	01
6713051-137	53-15-00-02	-082	01
6713051-138	53-15-00-02	-178	01
6713051-139	53-15-00-02	-114	01
6713051-14	53-15-00-02	-187	01
6713051-140	53-15-00-02	-181	01
6713051-141	53-15-00-02	-113	01
6713051-142	53-15-00-02	-180	01

© Cessna Aircraft Company

PART NUMBER	CH SEC SUBJ FIG	ITEM	REQ	PART NUMBER	CH SEC SUBJ FIG	ITEM	REQ
6713051-146	53-15-00-02	-081	01	6713072-25	53-15-00-02	-203	01
6713051-146	53-15-00-02	-177	01	6713072-28	53-15-00-02	-030	01
6713051-147	53-15-00-02	-080	01	6713072-28	53-15-00-02	-164	01
6713051-148	53-15-00-02	-176	01	6713072-3	53-15-00-02	-091	01
6713051-149	53-15-00-02	-001	01	6713072-33	53-15-00-02	-026	01
6713051-150	53-15-00-02	-150	01	6713072-33	53-15-00-02	-160	01
6713051-21	53-15-00-02	-079	01	6713072-34	53-15-00-01	-002	01
6713051-22	53-15-00-02	-169	01	6713072-35	53-15-00-02	-023	01
6713051-23	53-15-00-02	-121	01	6713072-36	53-15-00-02	-157	01
6713051-24	53-15-00-02	-207	01	6713072-37	53-15-00-02	-024	01
6713051-25	53-15-00-02	-125	01	6713072-38	53-15-00-02	-158	01
6713051-25	53-15-00-02	-209	01	6713072-39	53-15-00-02	-123	01
6713051-33	53-15-00-02	-092	01	6713072-40	53-15-00-02	-208	01
6713051-41	53-15-00-02	-087	01	6713072-42	53-15-00-02	-108	01
6713051-42	53-15-00-02	-185	01	6713072-42	53-15-00-02	-197	01
6713051-43	53-15-00-02	-086	01	6713072-44	53-15-00-02	-192	01
6713051-44	53-15-00-02	-184	01	6713072-45	53-15-00-02	-107	01
6713051-57	53-15-00-02	-124	01	6713072-46	53-15-00-02	-120	01
6713051-59	53-15-00-02	-111	01	6713072-46	53-15-00-02	-202	01
6713051-60	53-15-00-02	-201	01	6713072-47	53-15-00-02	-088	01
6713051-79	53-15-00-02	-084	01	6713072-48	53-15-00-02	-186	01
6713051-79	53-15-00-02	-183	01	6713072-5	53-15-00-02	-085	01
6713051-89	53-15-00-02	-112	01	6713072-53	53-15-00-02	-101	01
6713051-89	53-15-00-02	-200	01	6713072-57	53-15-00-02	-005	01
6713051-9	53-15-00-02	-036	01	6713072-58	53-15-00-02	-152	01
6713051-95	53-15-00-02	-043	01	6713072-6	53-15-00-02	-182	01
6713051-96	53-15-00-02	-166	01	6713072-61	53-15-00-02	-004	02
6713052-13	53-15-00-02	-010	02	6713072-63	53-15-00-02	-109	01
6713052-15	32-51-00-01	-039	02	6713072-63	53-15-00-02	-198	01
6713052-15	53-15-00-02	-021	06	6713072-65	53-15-00-02	-002	02
6713052-16	53-15-00-02	-009	AR	6713072-66	53-15-00-02	-003	01
6713061-19	52-40-37-01	-033	01	6713072-66	53-15-00-02	-151	01
6713061-20	52-40-37-01	-021	02	6713072-67	53-15-00-02	-006	01
6713061-20	52-40-37-01	-170	02	6713072-68	53-15-00-02	-153	01
6713061-27	52-40-37-01	-032	01	6713072-69	53-15-00-02	-106	01
6713061-29	52-40-37-01	-020	02	6713072-7	53-15-00-02	-095	01
6713061-29	52-40-37-01	-169	02	6713072-70	53-15-00-02	-195	01
6713061-31	52-40-37-01	-040	01	6713072-71	53-15-00-02	-077	01
6713061-35	52-40-37-01	-089	01	6713072-72	53-15-00-02	-090	01
6713061-37	52-40-37-01	-090	01	6713072-73	53-15-00-02	-105	01
6713062-10	52-40-37-01	-181	01	6713072-74	53-15-00-02	-189	01
6713062-12	52-40-37-01	-189	01	6713072-75	53-15-00-02	-041	01
6713062-14	52-40-37-01	-237	01	6713072-76	53-15-00-02	-037	01
6713062-8	52-40-37-01	-182	01	6713072-77	53-15-00-02	-075A	01
6713063-1	52-40-37-01	-001	01	6713072-8	53-15-00-02	-094	01
6713064-1	52-40-37-01	-150	01	6713072-9	53-15-00-02	-093	01
6713071-10	53-15-00-02	-159	01	6713090-10	53-10-10-02	-014	01
6713071-9	53-15-00-02	-025	01	6713090-11	53-10-10-02	-078	NP
6713072-1	53-15-00-02	-075	NP	6713090-12	53-10-10-02	-079	NP
6713072-13	53-15-00-02	-117	01	6713090-15	53-10-10-02	-006	NP
6713072-13	53-15-00-02	-204	01	6713090-16	53-10-10-02	-007	NP
6713072-15	53-15-00-02	-104	01	6713090-17	53-10-10-02	-018	NP
6713072-15	53-15-00-02	-191	01	6713090-18	53-10-10-02	-019	NP
6713072-16	53-15-00-02	-040	01	6713090-19	53-10-10-02	-082	NP
6713072-16	53-15-00-02	-190	01	6713090-2	53-10-10-02	-085	02
6713072-2	53-15-00-02	-165	01	6713090-20	53-10-10-02	-083	NP
6713072-20	53-15-00-02	-171	02	6713090-25	53-10-10-02	-010	NP
6713072-21	53-15-00-02	-173	01	6713090-26	53-10-10-02	-011	NP
6713072-22	53-15-00-02	-175	01	6713090-27	53-10-10-02	-022	NP
6713072-23	53-15-00-02	-193	01	6713090-28	53-10-10-02	-023	NP
6713072-24	53-15-00-02	-167	01	6713090-29	53-10-10-02	-077	02
6713072-25	53-15-00-02	-116	01	6713090-3	53-10-10-02	-075	01

© Cessna Aircraft Company

PART NUMBER	CH SEC SUBJ FIG	ITEM	REQ	PART NUMBER	CH SEC SUBJ FIG	ITEM	REQ
6713090-30	53-10-10-02	-088	02	6713102-72	53-10-10-01	-039	01
6713090-31	53-10-10-02	-005	02	6713102-72	53-10-10-01	-048	01
6713090-32	53-10-10-02	-017	02	6713102-72	53-10-10-01	-057	01
6713090-33	53-10-10-02	-098	02	6713103-5	53-10-00-02	-005	01
6713090-35	53-10-10-02	-089	NP	6713106-10	53-10-00-02	-075	NP
6713090-36	53-10-10-02	-090	NP	6713106-12	53-10-00-02	-078	NP
6713090-37	53-10-10-02	-093	NP	6713106-4	53-10-00-02	-079	01
6713090-38	53-10-10-02	-094	NP	6713107-11	53-10-00-02	-004	NP
6713090-39	53-10-10-02	-095	NP	6713107-9	53-10-00-02	-002	NP
6713090-4	53-10-10-02	-076	01	6713109-3	53-10-00-02	-006	01
6713090-40	53-10-10-02	-096	NP	6713109-4	53-10-00-02	-080	01
6713090-41	53-10-10-02	-078A	01	6713116-10	52-40-37-01	-161	01
6713090-42	53-10-10-02	-079A	01	6713116-19	52-40-37-01	-178	01
6713090-43	53-10-10-02	-089A	01	6713116-3	52-40-37-01	-009	01
6713090-44	53-10-10-02	-090A	01	6713116-4	52-40-37-01	-158	01
6713090-45	53-10-10-02	-006A	01	6713116-5	52-40-37-01	-010	01
6713090-46	53-10-10-02	-007A	01	6713116-6	52-40-37-01	-159	01
6713090-47	53-10-10-02	-018A	01	6713116-7	52-40-37-01	-011	01
6713090-48	53-10-10-02	-019A	01	6713116-8	52-40-37-01	-160	01
6713090-49	53-10-10-02	-082A	01	6713116-9	52-40-37-01	-012	01
6713090-5	53-10-10-02	-086	01	6713117-21	52-40-37-01	-083	01
6713090-50	53-10-10-02	-083A	01	6713117-24	52-40-37-01	-231	01
6713090-51	53-10-10-02	-093A	01	6713118-13	32-20-00-02	-017	01
6713090-52	53-10-10-02	-094A	01	6713118-14	32-20-00-02	-018	01
6713090-53	53-10-10-02	-095A	01	6713118-15	32-20-00-02	-019	01
6713090-54	53-10-10-02	-096A	01	6713118-16	32-20-00-02	-020	01
6713090-55	53-10-10-02	-010A	01	6713118-17	32-20-00-02	-096	01
6713090-56	53-10-10-02	-011A	01	6713118-18	32-20-00-02	-097	01
6713090-57	53-10-10-02	-022A	01	6713118-19	32-20-00-02	-098	01
6713090-58	53-10-10-02	-023A	01	6713118-20	32-20-00-02	-099	01
6713090-6	53-10-10-02	-087	01	6713118-21	32-20-00-02	-094	01
6713090-7	53-10-10-02	-001	01	6713118-23	52-80-15-01	-003	01
6713090-8	53-10-10-02	-002	01	6713118-33	52-80-15-01	-001	01
6713090-9	53-10-10-02	-013	01	6713118-36	52-80-15-01	-004	01
6713101-10	53-10-10-01	-002	01	6713118-5	52-80-15-01	-002	01
6713101-201	53-10-10-01	-001A	01	6713118-7	32-20-00-02	-109	01
6713101-9	53-10-10-01	-001	NP	6713118-8	32-20-00-02	-110	01
6713102-11	53-10-10-01	-008	02	6713121-14	52-40-37-01	-081	01
6713102-13	53-10-10-01	-009	01	6713121-15	52-40-37-01	-075	01
6713102-20	53-10-10-01	-003	AR	6713123-13	53-10-00-02	-017	01
6713102-29	53-10-10-01	-021	03	6713123-17	53-10-00-02	-019	01
6713102-3	53-10-10-01	-005	01	6713123-18	53-10-00-02	-085	01
6713102-4	53-10-10-01	-006	01	6713123-19	53-10-00-02	-020	01
6713102-41	53-10-10-01	-020	03	6713123-20	53-10-00-02	-086	01
6713102-49	53-10-10-01	-035	01	6713123-21	53-10-00-02	-021	01
6713102-50	53-10-10-01	-044	01	6713123-22	53-10-00-02	-087	01
6713102-51	53-10-10-01	-053	01	6713123-23	53-10-00-02	-022	01
6713102-52	53-10-10-01	-011	01	6713123-24	53-10-00-02	-088	01
6713102-53	53-10-10-01	-012	01	6713123-26	53-10-00-02	-089	01
6713102-54	53-10-10-01	-014	04	6713123-27	53-10-00-02	-013	01
6713102-56	53-10-10-01	-025	01	6713123-28	53-10-00-02	-091	01
6713102-58	53-10-10-01	-007	01	6713123-31	53-10-00-02	-007	01
6713102-59	53-10-10-01	-004	AR	6713123-32	53-10-00-02	-081	01
6713102-61	53-10-10-01	-055	01	6713123-33	53-10-00-02	-009	01
6713102-62	53-10-10-01	-054	01	6713123-34	53-10-00-02	-083	01
6713102-63	53-10-10-01	-036	01	6713123-35	53-10-00-02	-010	01
6713102-64	53-10-10-01	-045	01	6713123-36	53-10-00-02	-084	01
6713102-65	53-10-10-01	-037	01	6713123-37	53-10-00-02	-011	01
6713102-66	53-10-10-01	-046	01	6713123-38	53-10-00-02	-090	01
6713102-67	53-10-10-01	-038	01	6713123-39	53-10-00-02	-012	01
6713102-68	53-10-10-01	-047	01	6713123-41	53-10-00-02	-014	01
6713102-69	53-10-10-01	-056	01	6713123-43	53-10-00-02	-015	01

© Cessna Aircraft Company

PART NUMBER	CH SEC SUBJ FIG	ITEM	REQ	PART NUMBER	CH SEC SUBJ FIG	ITEM	REQ
6713123-53	53-10-00-02	-026	01	6713141-33	53-20-03-03	-032	01
6713123-54	53-10-00-02	-098	01	6713141-34	53-20-03-03	-033	01
6713124-1	53-10-00-02	-027	01	6713141-35	53-20-03-03	-011	01
6713124-11	53-10-00-02	-018	01	6713141-36	53-20-03-03	-037	02
6713124-12	53-10-00-02	-094	01	6713141-37	53-20-03-03	-027	01
6713124-13	53-10-00-02	-025	01	6713141-38	53-20-03-03	-028	01
6713124-14	53-10-00-02	-097	01	6713141-39	53-20-03-03	-029	01
6713124-15	53-10-00-02	-023	01	6713141-40	53-20-03-03	-030	01
6713124-16	53-10-00-02	-095	01	6713141-41	53-20-03-03	-019	01
6713124-17	53-10-00-02	-024	01	6713141-42	53-20-03-03	-020	01
6713124-18	53-10-00-02	-096	01	6713141-43	53-20-03-03	-016	01
6713124-2	53-10-00-02	-099	01	6713141-44	53-20-03-03	-017	01
6713124-20	53-10-00-02	-093	01	6713141-45	53-20-03-03	-021	01
6713124-21	53-10-00-02	-031	01	6713141-46	53-20-03-03	-022	01
6713124-22	53-10-00-02	-103	01	6713141-47	53-20-03-03	-023	01
6713124-23	53-10-00-02	-032	01	6713141-48	53-20-03-03	-024	01
6713124-24	53-10-00-02	-104	01	6713141-49	53-20-03-03	-025	01
6713124-29	53-10-00-02	-008	01	6713141-50	53-20-03-03	-026	01
6713124-3	53-10-00-02	-028	01	6713141-51	53-20-03-03	-004	01
6713124-30	53-10-00-02	-082	01	6713141-52	53-20-03-03	-039	01
6713124-31	53-10-00-02	-016	01	6713141-54	53-20-03-01	-007	02
6713124-32	53-10-00-02	-092	01	6713141-55	53-20-03-04	-002	02
6713124-33	53-10-00-02	-033	01	6713141-56	53-20-03-04	-003	02
6713124-34	53-10-00-02	-105	01	6713141-57	53-20-03-04	-001	02
6713124-35	53-10-00-02	-034	01	6713141-58	53-20-03-02	-015	02
6713124-4	53-10-00-02	-100	01	6713141-59	53-20-03-02	-004	01
6713124-5	53-10-00-02	-029	01	6713141-60	53-20-03-02	-005	01
6713124-6	53-10-00-02	-101	01	6713141-61	53-20-03-02	-013	01
6713124-7	53-10-00-02	-030	01	6713141-62	53-20-03-02	-014	01
6713124-8	53-10-00-02	-102	01	6713141-63	53-20-03-02	-016	01
6713125-1	53-10-00-02	-001	01	6713141-64	53-20-03-02	-017	01
6713136-19	53-20-06-01	-001	01	6713141-65	53-20-03-02	-008	02
6713136-20	53-20-06-01	-002	01	6713141-66	53-20-03-02	-010	01
6713136-21	53-20-06-01	-003	01	6713141-67	53-20-03-02	-006	01
6713136-22	53-20-06-01	-004	01	6713141-68	53-20-03-02	-007	01
6713136-23	53-20-06-01	-006	01	6713141-69	53-20-03-02	-009	02
6713136-24	53-20-06-01	-007	01	6713141-71	53-20-03-02	-001	01
6713136-25	53-20-06-01	-018	01	6713141-72	53-20-03-02	-022	01
6713136-26	53-20-06-01	-019	01	6713141-73	53-20-03-02	-023	01
6713136-27	53-20-06-01	-022	01	6713141-74	53-20-03-02	-024	02
6713136-28	53-20-06-01	-023	01	6713144-7	53-20-04-01	-001	01
6713136-31	53-20-06-01	-026	01	6713144-8	53-20-04-01	-001A	01
6713136-32	53-20-06-01	-027	01	6713145-100	53-20-04-01	-038	01
6713136-35	53-20-06-01	-024	01	6713145-100	53-20-04-01	-049	04
6713136-36	53-20-06-01	-025	01	6713145-101	53-20-04-01	-012	01
6713136-37	53-20-06-01	-020	01	6713145-102	53-20-04-01	-013	01
6713136-38	53-20-06-01	-021	01	6713145-103	53-20-04-01	-018	01
6713136-41	53-20-06-01	-008	01	6713145-104	53-20-04-01	-019	01
6713136-43	53-20-06-01	-010	01	6713145-105	53-20-04-01	-050	01
6713136-45	53-20-06-01	-016	01	6713145-106	53-20-04-01	-051	01
6713136-46	53-20-06-01	-017	01	6713145-107	53-20-04-01	-052	01
6713141-2	53-20-03-03	-010	01	6713145-108	53-20-04-01	-043	01
6713141-21	53-20-03-03	-038	02	6713145-109	53-20-04-01	-044	02
6713141-22	53-20-03-03	-031	02	6713145-110	53-20-04-01	-047	01
6713141-25	53-20-03-03	-014	01	6713145-112	53-20-04-01	-053	02
6713141-26	53-20-03-03	-015	01	6713145-113	53-20-04-01	-021	01
6713141-27	53-20-03-03	-036	02	6713145-114	53-20-04-01	-022	01
6713141-28	53-20-03-03	-005	01	6713145-70	53-20-04-01	-023	01
6713141-29	53-20-03-03	-034	01	6713145-72	53-20-04-01	-028	01
6713141-30	53-20-03-03	-035	01	6713145-73	53-20-04-01	-004	01
6713141-31	53-20-03-03	-002	01	6713145-74	53-20-04-01	-005	01
6713141-32	53-20-03-03	-001	01	6713145-75	53-20-04-01	-034	01

© Cessna Aircraft Company

PART NUMBER	CH SEC SUBJ FIG	ITEM	REQ	PART NUMBER	CH SEC SUBJ FIG	ITEM	REQ
6713145-77	53-20-04-01	-010	01	6714025-45	36-15-00-02	-175	01
6713145-78	53-20-04-01	-011	01	6714030-13	36-15-00-01	-029	01
6713145-79	53-20-04-01	-032	01	6714030-15	36-15-00-01	-030	01
6713145-80	53-20-04-01	-033	01	6714030-38	36-15-00-01	-002	02
6713145-81	53-20-04-01	-039	NP	6714030-4	36-15-00-01	-008	01
6713145-83	53-20-04-01	-026	01	6714030-6	36-15-00-01	-050	01
6713145-85	53-20-04-01	-014	01	6714040-1	21-50-10-01	-010	01
6713145-86	53-20-04-01	-015	01	6714040-11	21-50-10-01	-014	02
6713145-87	53-20-04-01	-030	01	6714040-23	21-50-10-01	-021	01
6713145-88	53-20-04-01	-029	01	6714040-25	21-50-10-01	-024	01
6713145-89	53-20-04-01	-006	01	6714040-27	21-50-10-01	-023	01
6713145-90	53-20-04-01	-007	01	6714040-29	21-50-10-01	-022	02
6713145-91	53-20-04-01	-016	01	6714040-9	21-50-10-01	-011	01
6713145-92	53-20-04-01	-017	01	6714044-10	21-35-00-01	-023	01
6713145-93	53-20-04-01	-042	02	6714044-12	21-35-00-01	-024	01
6713145-94	53-20-04-01	-025	02	6714044-4	21-35-00-01	-028	01
6713145-95	53-20-04-01	-008	01	6714044-8	21-35-00-01	-022	01
6713145-96	53-20-04-01	-009	01	6714044-9	21-35-00-01	-027	01
6713145-97	53-20-04-01	-045	02	6714045-1	35-10-20-01	-080	02
6713145-98	53-20-04-01	-046	02	6714055-9	35-10-20-01	-040	02
6713145-99	53-20-04-01	-020	01	6714057-10	30-13-10-01	-015	01
6713151-10	53-20-00-02	-016	01	6714057-3	30-13-10-01	-011	01
6713151-11	53-20-00-02	-023	01	6714057-4	30-13-10-01	-012	01
6713151-12	53-20-00-02	-024	01	6714057-5	30-13-10-01	-020	01
6713151-13	53-20-00-02	-043	01	6714057-6	30-13-10-01	-021	01
6713151-14	53-20-00-02	-044	01	6714057-7	30-13-10-01	-019	04
6713151-15	53-20-00-01	-091	01	6714057-9	30-13-10-01	-014	01
6713151-16	53-20-00-01	-093	01	6714061-13	34-10-00-02	-163	01
6713151-17	53-20-00-01	-092	01	6714061-16	34-10-00-02	-166	01
6713151-18	53-20-00-01	-094	01	6714061-17	34-10-00-02	-164	01
6713151-19	53-20-00-01	-096	01	6714061-25	34-10-00-01	-008	01
6713151-2	53-20-00-02	-001	01	6714061-26	34-10-00-01	-009	01
6713151-20	53-20-00-01	-098	01	6714061-27	34-10-00-02	-005	01
6713151-21	53-20-00-02	-006	01	6714061-28	34-10-00-02	-006	01
6713151-22	53-20-00-02	-007	01	6714061-29	34-10-00-02	-022	01
6713151-8	53-20-00-02	-003	02	6714061-32	34-10-00-02	-162	01
6713151-9	53-20-00-02	-015	01	6714061-35	34-10-00-02	-085	01
6714004-3	53-60-05-03	-018	01	6714061-36	34-10-00-02	-086	01
6714004-4	53-60-05-03	-019	01	6714061-43	34-10-00-02	-161	01
6714012-13	21-23-00-01	-078	01	6714061-44	34-10-00-02	-167	01
6714012-7	21-23-00-01	-156	01	6714061-45	34-10-00-02	-169	01
6714013-14	35-10-20-01	-035	01	6714061-46	34-10-00-02	-076	01
6714013-30	35-10-20-01	-076	01	6714061-47	34-10-00-02	-075	01
6714013-32	35-10-20-01	-075	01	6714061-52	34-10-00-02	-156	01
6714013-4	35-10-20-01	-005	01	6714061-53	34-10-00-02	-153	01
6714013-7	35-10-20-01	-004	02	6714061-54	34-10-00-02	-152	01
6714015-2	36-15-00-03	-091	01	6714061-55	34-10-00-02	-151	01
6714015-7	36-15-00-03	-033	01	6714061-56	34-10-00-02	-244	01
6714015-8	36-15-00-03	-032	01	6714061-57	34-10-00-02	-245	01
6714016-2	52-11-20-01	-016	01	6714061-58	34-10-00-02	-154	01
6714016-3	52-11-20-01	-020	01	6714061-59	34-10-00-02	-155	01
6714023-10	36-15-00-01	-025	02	6714061-60	34-10-00-02	-082	01
6714023-12	36-15-00-02	-099	01	6714061-61	34-10-00-02	-083	01
6714023-18	36-15-00-02	-090	01	6714061-62	34-10-00-02	-084	02
6714023-21	21-35-00-01	-038	01	6714073-1	36-15-00-01	-079	01
6714023-21	36-15-00-02	-102	01	6714073-101	36-15-00-02	-159	01
6714023-23	36-15-00-02	-086	01	6714073-103	36-15-00-02	-051	01
6714023-26	36-15-00-02	-085	01	6714073-104	36-15-00-02	-027	01
6714023-27	36-15-00-02	-082	01	6714073-105	36-15-00-02	-076	01
6714023-7	36-15-00-02	-107	01	6714073-106	36-15-00-02	-150	01
6714023-9	36-15-00-02	-092	01	6714073-107	36-15-00-03	-025	01
6714024-3	21-25-00-01	-018	01	6714073-108	36-15-00-03	-010	01

© Cessna Aircraft Company

PART NUMBER	CH SEC SUBJ FIG	ITEM	REQ	PART NUMBER	CH SEC SUBJ FIG	ITEM	REQ
6714073-110	36-15-00-03	-026	01	6714161-27	35-10-20-01	-017	01
6714073-112	36-15-00-03	-008	01	6714161-28	35-10-20-01	-023	01
6714073-114	36-15-00-02	-002	01	6714161-34	35-10-00-01	-025	01
6714073-115	36-15-00-02	-160	01	6714161-39	35-20-00-01	-007	01
6714073-116	36-15-00-02	-158	01	6714161-40	35-10-20-01	-097	01
6714073-120	36-15-00-02	-004	01	6714161-41	35-10-20-01	-098	01
6714073-121	36-15-00-02	-110	01	6714161-42	35-10-20-01	-099	01
6714073-122	36-15-00-02	-003	01	6714161-43	35-10-20-01	-015	01
6714073-124	36-15-00-03	-005	01	6714161-44	35-10-20-01	-009	01
6714073-125	36-15-00-03	-009	01	6714161-45	35-20-00-01	-008	01
6714073-127	36-15-00-02	-151	01	6714161-46	35-20-00-01	-009	01
6714073-128	36-15-00-01	-013	01	6714161-47	35-20-00-01	-010	01
6714073-129	36-15-00-01	-014	01	6714161-48	35-20-00-01	-014	01
6714073-13	36-15-00-03	-084	01	6714161-51	35-10-20-01	-109	01
6714073-15	36-15-00-02	-156	01	6714161-53	35-20-00-01	-005	01
6714073-2	36-15-00-01	-078	01	6714161-54	35-20-00-01	-006	01
6714073-20	36-15-00-03	-031	01	6714161-55	35-10-00-01	-022	01
6714073-21	36-15-00-03	-085	01	6714161-56	35-10-00-01	-024	01
6714073-24	36-15-00-01	-020	01	6714161-57	35-10-00-01	-026	01
6714073-26	36-15-00-03	-076	01	6714161-58	35-10-00-01	-006	01
6714073-27	36-15-00-03	-090	01	6714161-59	35-10-00-01	-011	01
6714073-28	36-15-00-01	-049	01	6714161-60	35-20-00-01	-003	01
6714073-29	36-15-00-01	-087	01	6714161-61	35-10-00-01	-014	01
6714073-30	36-15-00-01	-077	03	6714254-10	26-13-00-01	-003	01
6714073-31	36-15-00-01	-081	03	6714321-1	21-35-00-01	-007	01
6714073-33	36-15-00-01	-052	01	6714321-10	21-33-00-01	-024	01
6714073-33	36-15-00-01	-100	01	6714321-11	37-10-00-01	-002	01
6714073-35	36-15-00-02	-176	01	6714321-13	37-10-00-01	-079	01
6714073-4	36-15-00-01	-016	01	6714321-16	21-35-00-01	-035	01
6714073-42	36-15-00-03	-104	04	6714321-17	37-10-00-01	-085	01
6714073-42	36-15-00-03	-105	01	6714321-18	21-35-00-01	-023A	01
6714073-43	36-15-00-02	-179	01	6714321-19	21-35-00-01	-024A	01
6714073-50	36-15-00-02	-020	01	6714321-21	21-35-00-01	-027A	01
6714073-56	36-15-00-03	-092	01	6714321-5	21-35-00-01	-081	01
6714073-59	36-15-00-03	-002	01	6714321-6	21-35-00-01	-082	01
6714073-61	36-15-00-01	-086	01	6714321-7	21-31-00-01	-007	01
6714073-63	36-15-00-02	-152	01	6714321-8	21-31-00-01	-010	01
6714073-64	36-15-00-02	-019	01	6714321-9	21-33-00-01	-023	01
6714073-70	36-15-00-02	-021	01	6714351-10	21-50-10-01	-035	01
6714073-73	36-15-00-02	-157	01	6714351-30	21-50-10-01	-012	01
6714073-76	36-15-00-01	-096	04	6714351-31	21-50-10-01	-013	01
6714073-78	36-15-00-01	-097	02	6714351-46	21-50-10-01	-004	02
6714073-80	36-15-00-01	-098	03	6714351-5	21-50-10-01	-030	01
6714073-82	36-15-00-01	-099	01	6714351-50	21-50-10-01	-008	01
6714073-86	36-15-00-01	-004	01	6714351-52	21-50-10-01	-003	01
6714073-87	36-15-00-01	-005	01	6714351-55	21-50-10-01	-032	04
6714073-88	36-15-00-01	-015	01	6714352-21	21-50-10-01	-049	01
6714073-89	36-15-00-01	-009	01	6714352-29	21-50-10-01	-045	01
6714073-90	36-15-00-01	-011	01	6714352-35	21-50-10-01	-050	01
6714073-91	36-15-00-01	-019	01	6714352-37	21-50-10-01	-043	01
6714073-92	36-15-00-01	-017	01	6714353-1	21-23-00-01	-001	01
6714073-93	36-15-00-01	-018	01	6714353-101	21-23-00-01	-075	01
6714073-94	36-15-00-01	-085	01	6714353-21	21-23-00-01	-014	01
6714073-95	36-15-00-01	-088	01	6714353-55	21-25-00-01	-100	02
6714152-24	34-10-00-01	-019	01	6714353-57	21-25-00-01	-103	01
6714152-35	34-10-00-01	-005	01	6714353-58	21-25-00-01	-104	01
6714152-36	34-10-00-01	-006	01	6714353-59	21-25-00-01	-105	01
6714154-31	34-10-00-01	-021	01	6714353-60	21-25-00-01	-106	01
6714161-22	35-10-00-01	-087	01	6714353-7	21-23-00-01	-005	01
6714161-24	35-10-20-01	-151	01	6714353-83	21-23-00-01	-088	01
6714161-25	35-10-20-01	-152	01	6714353-9	21-23-00-01	-013	01
6714161-26	35-10-20-01	-041	01	6714353-96	21-25-00-01	-085	02

© Cessna Aircraft Company

PART NUMBER	CH SEC SUBJ FIG	ITEM	REQ	PART NUMBER	CH SEC SUBJ FIG	ITEM	REQ
6714354-10	21-25-00-01	-102	01	6714376-1	36-10-20-01	-022	01
6714354-13	21-23-00-01	-093	01	6714376-19	36-10-20-01	-005	01
6714354-15	21-23-00-01	-095	01	6714376-2	36-10-20-01	-023	01
6714354-18	21-25-00-01	-083	01	6714376-20	36-10-20-01	-006	01
6714354-19	21-25-00-01	-084	01	6714376-21	36-10-20-01	-019	01
6714354-5	21-25-00-01	-093	01	6714376-22	36-10-20-01	-020	01
6714356-29	21-25-00-01	-098	01	6714376-27	36-10-20-01	-010	01
6714356-31	21-23-00-01	-020	01	6714376-28	36-10-20-01	-011	01
6714356-39	21-25-00-01	-099	01	6714376-29	36-10-20-01	-007	01
6714356-40	21-25-00-01	-101	01	6714376-5	36-10-20-01	-024	01
6714356-42	21-23-00-01	-096	01	6714376-6	36-10-20-01	-025	01
6714356-43	21-23-00-01	-019	01	6714377-1	36-10-20-03	-075	01
6714356-45	21-23-00-01	-094	01	6714377-2	36-10-20-03	-076	01
6714356-46	21-50-10-01	-033	01	6714383-121	36-10-20-03	-020	01
6714356-48	21-50-10-01	-039	01	6714383-125	30-20-00-01	-031	01
6714356-53	21-25-00-01	-004	01	6714383-126	30-20-00-01	-030	01
6714356-59	21-23-00-01	-016	01	6714383-145	30-20-00-01	-023	04
6714356-63	53-50-00-03	-016	01	6714383-157	36-10-20-01	-026	01
6714357-10	21-50-05-01	-012	01	6714383-160	36-10-20-02	-106	01
6714357-11	21-50-05-01	-007	01	6714383-162	36-10-20-02	-098	NP
6714357-15	53-60-02-01	-024	01	6714383-163	36-10-20-02	-098A	01
6714357-19	21-50-05-01	-013	01	6714383-17	36-10-20-03	-005	01
6714357-21	21-50-05-01	-003	01	6714383-18	36-10-20-03	-006	01
6714357-6	21-50-05-01	-002	01	6714383-39	36-10-20-03	-008	01
6714357-9	21-50-05-01	-008	01	6714383-74	36-10-20-01	-027	01
6714360-3	21-35-00-01	-094	01	6714383-89	36-10-20-03	-097	01
6714360-4	21-35-00-01	-095	01	6714383-97	36-10-20-01	-028	01
6714360-5	21-33-00-01	-027	01	6714383-98	36-10-20-01	-029	01
6714360-5	21-33-00-01	-038	01	6714388-27	36-15-00-01	-082	01
6714360-5	37-10-00-01	-004	01	6714388-41	36-15-00-03	-075	01
6714360-7	37-10-00-01	-010	01	6714388-5	36-15-00-01	-035	01
6714360-8	21-35-00-01	-092	01	6714388-6	36-15-00-02	-115	01
6714361-2	21-23-00-01	-157	01	6714388-91	36-15-00-01	-084	01
6714361-5	21-23-00-01	-164	01	6714388-92	36-15-00-01	-083	01
6714361-6	21-23-00-01	-159	01	6714390-21	30-10-00-02	-017	01
6714362-10	21-50-20-01	-026	01	6714390-23	30-10-00-02	-020	01
6714362-11	21-50-20-01	-020	01	6714390-24	30-10-00-02	-021	01
6714362-12	21-50-20-01	-024	01	6714390-27	30-10-00-02	-014	01
6714362-13	21-50-20-01	-019	01	6714390-29	30-10-00-02	-086	02
6714362-14	21-50-20-01	-025	01	6714390-31	30-10-00-02	-089	04
6714362-3	21-50-20-01	-015	01	6714390-36	30-10-00-02	-028	02
6714362-4	21-50-20-01	-021	01	6714390-37	30-10-00-02	-012	01
6714362-5	21-50-20-01	-016	01	6714391-103	30-10-00-01	-001	01
6714362-6	21-50-20-01	-022	01	6714391-104	30-10-00-01	-002	01
6714362-7	21-50-20-01	-017	01	6714391-109	30-10-00-01	-006	02
6714362-8	21-50-20-01	-023	01	6714391-51	30-10-00-01	-075	01
6714362-9	21-50-20-01	-018	01	6714391-59	30-13-00-01	-005	02
6714367-3	36-10-20-04	-094	01	6714391-61	30-13-00-01	-008	01
6714367-4	36-10-20-04	-095	01	6714391-63	30-13-00-01	-009	01
6714371-3	21-21-00-01	-030	01	6714391-73	36-10-20-02	-080	01
6714371-4	21-21-00-01	-027	01	6714391-74	36-10-20-02	-081	01
6714372-12	21-21-00-01	-007	01	6714392-1	36-10-20-04	-027	01
6714372-2	21-21-00-01	-018	01	6714392-15	36-10-20-04	-088	01
6714372-3	30-10-00-01	-022	01	6714392-16	36-10-20-04	-089	01
6714372-4	30-10-00-01	-023	01	6714392-17	36-10-20-04	-099	01
6714372-6	30-10-00-01	-008	01	6714392-2	36-10-20-04	-028	01
6714372-7	30-10-00-01	-007	01	6714392-29	21-21-00-01	-003	01
6714372-9	21-21-00-01	-012	01	6714392-47	21-21-00-01	-023	01
6714375-3	36-10-20-01	-001	01	6714392-7	36-10-20-04	-078	01
6714375-4	36-10-20-01	-002	01	6714392-73	21-21-00-01	-002	01
6714375-5	36-10-20-03	-002	01	6714392-8	36-10-20-04	-079	01
6714375-6	36-10-20-03	-003	01	6714392-83	36-10-20-04	-100	01

© Cessna Aircraft Company

PART NUMBER	CH SEC SUBJ FIG	ITEM	REQ
6714392-88	21-21-00-01	-015	01
6714392-90	21-25-00-01	-009	01
6714392-92	21-25-00-01	-012	02
6714393-1	80-10-00-01	-153	01
6714393-11	80-10-00-01	-181	01
6714393-31	36-13-00-01	-010	01
6714393-35	36-13-00-01	-017	01
6714393-41	36-13-00-01	-006	01
6714393-43	80-10-00-01	-173	01
6714393-47	80-10-00-01	-163	01
6714394-17	36-10-20-04	-025	01
6714394-18	36-10-20-04	-026	01
6714394-25	30-20-00-01	-001	02
6714394-27	30-20-00-01	-004	01
6714394-28	30-20-00-01	-005	01
6714394-31	80-10-00-01	-104	02
6714394-33	80-10-00-01	-101	02
6714396-25	36-10-20-01	-018	02
6714396-27	36-10-20-01	-016	01
6714396-28	36-10-20-01	-017	01
6714397-10	80-10-00-01	-158	01
6714397-13	30-13-00-01	-019	01
6714397-15	30-10-00-01	-096	01
6714397-17	30-10-00-01	-086	01
6714397-22	30-10-00-01	-085	01
6714397-25	36-10-20-02	-087	01
6714397-26	36-10-20-02	-088	01
6714397-27	80-10-00-01	-165	01
6714397-29	30-10-00-01	-089	01
6714397-3	36-10-20-04	-033	01
6714397-4	36-10-20-04	-034	01
6714397-5	21-25-00-01	-011	01
6714397-9	80-10-00-01	-157	01
6714398-10	30-10-00-02	-019	01
6714398-15	30-10-00-02	-022	01
6714398-16	30-10-00-02	-023	01
6714398-21	30-10-00-02	-088	02
6714398-3	30-10-00-02	-004	02
6714398-45	30-10-00-02	-075	04
6714398-45	30-10-00-02	-154	01
6714398-45	36-10-20-04	-037	04
6714398-5	30-10-00-02	-005	01
6714398-6	30-10-00-02	-006	01
6714398-63	30-10-00-02	-096	01
6714398-7	30-10-00-02	-013	02
6714398-70	30-10-00-02	-094	01
6714398-86	30-10-00-02	-095	01
6714398-89	30-10-00-02	-163	01
6714398-9	30-10-00-02	-018	01
6714402-25	30-10-20-01	-012	01
6714402-26	30-10-20-01	-013	01
6714402-37	30-10-20-01	-001	01
6714402-38	30-10-20-01	-002	01
6714402-39	30-10-20-01	-075	02
6714402-63	30-10-20-01	-015	01
6714402-64	30-10-20-01	-016	01
6714402-69	30-10-20-01	-079	01
6714402-70	30-10-20-01	-080	01
6714403-13	30-10-30-01	-008	01
6714403-14	30-10-30-01	-009	01
6714403-31	57-40-00-02	-008	04
6714403-33	30-10-30-01	-022	01
6714403-33	57-20-00-04	-013	01
6714403-34	30-10-30-01	-023	01
6714403-34	57-20-00-04	-014	01
6714403-37	57-40-10-01	-018	01
6714403-38	57-40-10-01	-019	01
6714403-43	57-40-00-02	-006	01
6714403-44	57-40-00-02	-007	01
6714403-51	57-40-10-01	-020	01
6714403-52	57-40-10-01	-021	01
6714403-53	57-40-00-02	-005	02
6714403-57	30-10-30-01	-001	01
6714403-58	30-10-30-01	-002	01
6714403-61	30-10-30-01	-011	01
6714403-62	30-10-30-01	-012	01
6714403-63	57-40-10-01	-022	01
6714403-64	57-40-10-01	-023	01
6714407-3	30-10-00-02	-022A	01
6714407-3	30-10-00-02	-023A	01
6714407-5	30-10-00-02	-088A	01
6714407-6	30-10-00-02	-088B	01
6714413-5	30-10-20-01	-032	01
6714413-6	30-10-20-01	-033	01
6714414-7	57-40-00-02	-003	01
6714451-23	30-13-10-01	-079	01
6714451-24	30-13-10-01	-080	01
6714451-33	30-13-10-01	-002	01
6714451-4	30-13-10-01	-085	01
6714451-49	30-13-10-01	-007	02
6714451-5	30-13-10-01	-084	01
6714451-69	30-13-10-01	-023	02
6714451-74	30-13-10-01	-075	02
6714451-76	30-13-10-01	-001	01
6714501-11	30-40-00-01	-017	01
6714501-11	30-40-00-01A	-026	01
6714501-12	30-40-00-01	-018	01
6714501-12	30-40-00-01A	-027	01
6714501-2	30-40-00-01	-022	01
6714502-1	30-40-00-01	-007	01
6714502-1	30-40-00-01A	-011	01
6714502-20	30-40-00-01	-021	01
6714502-20	30-40-00-01A	-030	01
6714502-3	30-40-00-01	-008	01
6714502-3	30-40-00-01A	-012	01
6714502-4	30-40-00-01	-005	02
6714502-40	30-40-00-01	-009	01
6714505-4	30-40-00-01A	-040	01
6714505-7	30-40-00-01A	-031	01
6714505-8	30-40-00-01A	-010A	01
6714505-9	30-40-00-01A	-012A	01
6714553-13	21-26-00-01	-029	01
6714553-19	21-26-00-01	-028	01
6714553-23	21-26-00-01	-027	01
6714555-18	21-25-00-01	-113	02
6714555-23	21-25-00-01	-110	01
6714555-24	21-25-00-01	-111	01
6714555-25	21-25-00-01	-109	02
6714556-6	21-26-00-01	-001	01
6714556-7	21-26-00-01	-007	01
6714557-2	21-26-00-01	-021	01
6714557-3	21-26-00-01	-012	01
6714557-4	21-26-00-01	-022	02
6714557-8	21-26-00-01	-015	02

© Cessna Aircraft Company

PART NUMBER	CH SEC SUBJ FIG	ITEM	REQ
6714558-10	21-26-00-01	-023	01
6714558-11	21-26-00-01	-024	01
6714558-19	21-26-00-01	-031	01
6714558-7	21-26-00-01	-030	01
6714568-3	21-26-00-01	-031A	01
6715002-1	21-25-00-01	-014	02
6715003-1	21-23-00-01	-083	02
6715003-1	21-25-00-01	-077	02
6715005-2	21-35-00-01	-004	01
6715301-12	21-33-00-01	-036	01
6715301-13	21-33-00-01	-020	01
6715301-14	21-33-00-01	-021	01
6715301-15	37-10-00-01	-016	01
6715301-4	21-33-00-01	-003	01
6715301-7	21-33-00-01	-026	01
6715301-8	21-33-00-01	-019	01
6715302-3	21-35-00-01	-012	01
6715302-4	21-35-00-01	-013	01
6715302-5	21-35-00-01	-016	01
6715302-6	21-35-00-01	-015	01
6716000-13	28-20-00-02	-108	01
6716000-14	28-20-00-02	-109	01
6716000-17	28-20-00-02	-113	01
6716000-18	28-20-00-02	-114	01
6716000-21	28-20-00-02	-110	01
6716000-22	28-20-00-02	-111	01
6716000-30	28-20-00-02	-085	01
6716000-31	28-20-00-02	-084	01
6716000-32	28-20-00-02	-009	02
6716000-37	28-20-00-02	-024	01
6716000-38	28-20-00-02	-025	01
6716000-39	28-20-00-02	-029	01
6716000-4	28-20-00-02	-099	02
6716000-40	28-20-00-02	-030	01
6716000-41	28-20-00-02	-012	01
6716000-42	28-20-00-02	-013	01
6716001-21	28-20-00-02	-075	01
6716001-22	28-20-00-02	-076	01
6716002-13	28-20-00-02	-014	01
6716002-14	28-20-00-02	-015	01
6716002-21	28-20-00-02	-083	02
6716005-1	28-20-00-02	-096	02
6716005-3	28-20-00-02	-097	02
6716005-5	28-20-00-02	-106	02
6716005-6	28-20-00-02	-093	02
6717002-10	32-35-00-01	-009	02
6717002-10	32-49-00-01	-094	02
6717002-11	32-33-00-01	-016	01
6717002-38	32-49-00-01	-024	01
6717002-6	32-35-00-01	-008	01
6717002-6	32-49-00-01	-092	01
6717002-9	32-49-00-01	-093	01
6717003-13	29-10-00-04	-330	01
6717003-20	29-10-80-01	-003	01
6717003-20	29-10-80-01	-091	01
6717003-20	29-23-00-01	-388	01
6717003-27	29-23-05-01	-029	01
6717003-3	29-23-05-01	-030	01
6717003-9	29-23-05-01	-028	01
6717004-23	29-10-00-04	-032	01
6717004-25	29-23-05-01	-006	01
6717006-3	32-51-05-01	-005	01
6717006-4	32-51-05-01	-006	01
6717009-11	29-10-00-07	-085	02
6717009-4	29-10-00-07	-174	02
6717012-3	29-23-05-01	-005	01
6717012-4	29-23-05-01	-031	01
6717013-4	32-45-00-01	-024	01
6717015-13	29-23-00-01	-247	01
6717015-15	29-23-00-01	-389	01
6717015-16	29-23-00-01	-308	01
6717015-18	29-23-00-01	-159	01
6717015-20	29-23-05-01	-078	01
6717015-21	29-23-00-01	-153	01
6717015-23	29-23-00-01	-159A	01
6717015-9	29-23-00-01	-090	01
6717016-2	32-49-00-01	-005	04
6717016-5	32-51-05-01	-035	01
6717016-6	32-51-05-01	-036	01
6717017-2	32-45-00-01	-018	01
6717017-3	32-45-00-01	-012	12
6717017-5	32-45-00-01	-014	02
6717017-6	32-45-00-01	-030	01
6717017-7	32-45-00-01	-027	01
6717020-1	29-23-05-01	-027	01
6717024-2	32-33-00-01	-099	02
6717024-4	32-33-00-01	-100	01
6717025-3	29-23-05-01	-162B	01
6717151-3	32-33-00-01	-003	02
6717277-1	29-20-05-01	-014	NP
6717277-3	29-10-00-05	-150	NP
6717277-6	29-10-00-04	-254	NP
6717277-6	29-10-00-06	-185	NP
6717278-1	29-20-05-01	-014A	01
6717278-3	29-10-00-05	-150A	01
6717278-5	29-10-00-04	-254A	01
6717278-5	29-10-00-06	-185A	01
6717353-3	29-10-80-01	-159	01
6717700-15	32-49-00-01	-086	01
6717700-16	32-33-00-01	-093	01
6717700-20	32-33-00-01	-091	01
6717700-21	32-33-00-01	-098	01
6717700-25	32-49-00-01	-020	01
6717701-14	32-33-00-01	-081	01
6717701-16	32-49-00-01	-019	01
6717701-17	32-49-00-01	-015	01
6717701-18	32-49-00-01	-011	01
6717701-19	32-51-05-01	-025	01
6717701-2	32-51-05-01	-014	01
6717701-20	32-51-05-01	-018	01
6717701-7	32-49-00-01	-085	01
6717702-2	32-33-00-01	-079	01
6717702-3	32-49-00-01	-018	01
6717702-4	32-33-00-01	-080	01
6717710-16	32-30-00-03	-018	01
6717710-32	32-33-00-01	-104	01
6717710-34	32-51-05-01	-107	01
6717710-35	32-51-05-01	-087	01
6717710-40	32-30-00-03	-025	01
6717710-41	32-30-00-03	-026	01
6717710-42	32-30-00-03	-027	01
6717710-43	32-30-00-03	-028	01
6717711-5	32-51-00-01	-087	01
6717711-6	32-51-05-01	-075	01

© Cessna Aircraft Company

PART NUMBER	CH SEC SUBJ FIG	ITEM	REQ
6717711-7	32-51-05-01	-082	01
6717711-8	32-51-05-01	-086	01
6717721-49	32-49-00-02	-005	01
6717726-11	29-10-00-07	-152	01
6717726-12	29-10-00-08	-108	01
6717726-15	29-10-00-07	-150	01
6717726-19	32-30-00-02	-017	01
6717726-20	32-30-00-02	-015	01
6717726-23	32-30-00-02	-016	01
6717726-24	32-30-00-02	-014	01
6717726-3	29-10-00-07	-153	01
6717726-7	29-10-00-07	-151	01
6717729-11	29-10-00-08	-077	01
6717729-12	29-10-00-08	-056	01
6717729-13	29-10-00-08	-095	01
6717729-14	29-10-00-08	-097	01
6717729-15	29-10-00-08	-094	01
6717729-18	29-10-00-08	-005	01
6717729-19	29-10-00-08	-081	01
6717729-21	29-10-00-08	-096	01
6717729-22	29-10-00-08	-046	01
6717729-23	29-10-00-08	-093	01
6717729-24	29-10-00-08	-098	01
6717729-27	27-80-00-01	-007	01
6717729-27	29-10-00-08	-105	01
6717729-28	29-10-00-08	-020	01
6717729-29	27-80-00-01	-009	01
6717729-29	29-10-00-08	-107	01
6717729-30	29-10-00-08	-076	01
6717729-32	27-80-00-01	-006	01
6717729-32	29-10-00-08	-104	01
6717729-34	27-80-00-01	-008	01
6717729-34	29-10-00-08	-106	01
6717729-8	29-10-00-08	-006	01
6717729-9	29-10-00-08	-035	01
6717730-22	32-43-00-02	-011	01
6717730-24	32-43-00-02	-010	01
6717730-27	32-43-00-02	-013	01
6717730-28	32-33-00-01	-229	01
6717731-13	29-10-00-07	-161	01
6717731-14	29-10-00-07	-160	01
6717731-15	32-49-00-02	-078	01
6717731-16	32-49-00-02	-079	01
6717731-17	32-49-00-02	-080	01
6717731-5	32-43-00-02	-012	01
6717741-11	29-10-00-05	-169	01
6717741-12	29-10-00-05	-300	01
6717741-13	29-10-00-05	-161	01
6717741-14	32-30-00-02	-089	01
6717741-15	32-30-00-02	-090	01
6717741-16	29-20-05-01	-012	01
6717741-17	29-21-00-01	-016	01
6717741-19	29-10-00-05	-195	01
6717741-2	29-10-00-05	-318	01
6717741-21	29-10-00-05	-303	01
6717741-22	29-10-00-05	-155	01
6717741-23	29-10-00-05	-309	01
6717741-24	29-10-00-05	-172	01
6717741-25	29-10-00-05	-240	01
6717741-7	29-10-00-05	-163	01
6717751-11	29-10-00-06	-016	01
6717751-12	29-10-00-06	-011	01
6717751-17	29-10-00-06	-153	01
6717751-3	29-10-00-06	-176	01
6717751-30	29-10-00-06	-017	01
6717751-31	29-10-00-06	-015	01
6717751-32	29-10-00-06	-002	01
6717751-34	29-10-00-06	-001	01
6717751-35	29-10-00-06	-075	01
6717751-47	29-10-80-01	-016	01
6717751-48	29-10-80-01	-009	01
6717751-49	29-10-80-01	-010	01
6717751-5	29-10-00-06	-025	01
6717751-50	29-10-00-06	-177	01
6717751-52	29-10-00-06	-089	01
6717751-55	29-10-00-06	-151	01
6717751-56	29-10-00-06	-152	01
6717751-57	29-23-05-01	-025	01
6717751-58	29-10-00-06	-168	01
6717751-6	29-10-00-06	-103	01
6717751-60	29-10-00-06	-076	01
6717751-61	29-10-00-06	-150	01
6717751-62	29-10-00-06	-154	01
6717751-7	29-10-00-06	-024	01
6717751-8	29-10-80-01	-019	01
6717751-9	29-10-00-06	-019	01
6717761-12	29-10-00-04	-317	01
6717761-14	29-10-00-04	-022	01
6717761-18	29-10-00-04	-231	01
6717761-19	29-10-80-01	-092	01
6717761-20	29-10-00-04	-040	01
6717761-22	29-10-00-04	-028	01
6717761-23	29-10-00-04	-017	01
6717761-24	29-10-00-04	-001	01
6717761-25	29-10-00-04	-098	01
6717761-3	29-10-00-04	-153	01
6717761-30	29-10-00-04	-009	01
6717761-32	29-10-00-04	-011	01
6717761-38	29-10-00-04	-172	01
6717761-38	29-23-05-01	-026	01
6717761-39	29-10-00-04	-300	01
6717761-4	29-10-00-04	-115	01
6717761-40	29-10-00-04	-168	01
6717761-41	29-10-00-04	-160	01
6717761-43	29-10-80-01	-082	01
6717761-44	29-10-00-04	-307	01
6717761-45	29-10-00-04	-034	01
6717761-47	29-10-00-04	-091	01
6717761-48	29-10-00-04	-092	01
6717761-49	29-10-00-04	-326	01
6717761-50	29-10-00-04	-235	01
6717761-52	29-10-80-01	-075	01
6717761-6	29-10-00-04	-247	01
6717761-8	29-10-00-04	-310	01
6717770-11	29-10-00-01	-151	01
6717770-12	29-10-00-01	-156	01
6717770-20	29-10-00-01	-030	01
6717770-22	29-10-00-01	-014	01
6717770-24	29-10-00-01	-168	01
6717770-3	78-30-10-01	-013	01
6717770-30	78-30-10-01	-086	01
6717770-32	29-10-00-01	-090	01
6717770-32	29-10-00-02	-090	01
6717770-33	29-10-00-01	-091	01

© Cessna Aircraft Company

PART NUMBER	CH SEC SUBJ FIG	ITEM	REQ	PART NUMBER	CH SEC SUBJ FIG	ITEM	REQ
6717770-34	29-10-00-01	-078	01	6717788-28	32-49-00-02	-003	01
6717770-36	29-10-00-01	-086	01	6717788-29	29-10-00-07	-028	01
6717770-39	78-30-10-01	-092	01	6717788-30	29-10-00-07	-027	01
6717770-4	78-30-10-01	-079	01	6717788-31	32-30-00-03	-076	01
6717770-40	78-30-10-01	-010	01	6717788-32	32-30-00-03	-075	01
6717770-41	78-30-10-01	-093	01	6717788-33	32-33-00-01	-150	01
6717770-43	78-30-10-01	-100	01	6717788-34	32-49-00-02	-001	01
6717770-44	78-30-10-01	-009	01	6717788-35	32-33-00-01	-152	01
6717770-45	29-10-00-01	-034	01	6717788-6	29-10-00-07	-026	01
6717770-8	29-10-00-01	-092	01	6717788-7	29-10-00-07	-025	01
6717780-12	29-10-00-02	-163	01	6717790-10	32-49-00-02	-012	01
6717780-13	29-10-00-02	-167	01	6717790-11	29-10-00-07	-020	01
6717780-14	29-10-00-02	-028	01	6717790-12	29-10-00-07	-080	01
6717780-21	29-10-00-02	-025	01	6717790-13	29-10-00-07	-077	01
6717780-22	29-10-00-02	-010	01	6717790-14	32-30-00-02	-012	01
6717780-23	29-10-00-01	-025	01	6717790-15	32-30-00-02	-010	01
6717780-23	29-10-00-02	-023	01	6717790-16	29-10-00-07	-078	01
6717780-26	78-30-10-02	-099	01	6717790-17	29-10-00-07	-019	01
6717780-27	78-30-10-02	-001	01	6717790-5	29-10-00-07	-022	01
6717780-28	78-30-10-02	-008	01	6717790-6	32-30-00-02	-013	01
6717780-32	78-30-10-02	-097	01	6717790-7	32-30-00-02	-011	01
6717780-36	29-10-00-02	-085	01	6717790-9	32-33-00-01	-225	01
6717780-37	29-10-00-02	-098	01	6717792-1	32-43-00-02	-006	01
6717780-39	29-10-00-02	-089	01	6717792-10	29-10-00-07	-002	01
6717780-4	78-30-10-02	-103	01	6717792-11	32-30-00-02	-005	01
6717780-41	29-10-00-02	-075	01	6717792-12	32-30-00-02	-008	01
6717780-43	78-30-10-02	-014	01	6717792-13	32-43-00-02	-009	01
6717780-44	78-30-10-02	-094	01	6717792-14	32-33-00-01	-228	01
6717780-45	29-10-00-02	-002	01	6717792-2	32-49-00-02	-076	01
6717780-46	29-10-00-02	-033	01	6717792-3	32-33-00-01	-226	01
6717780-48	29-10-00-02	-005	01	6717792-4	32-43-00-02	-008	01
6717780-49	29-10-00-02	-080	01	6717792-5	29-10-00-07	-004	01
6717780-5	78-30-10-02	-098	01	6717792-6	29-10-00-07	-001	01
6717780-50	29-10-00-02	-150	01	6717792-7	32-33-00-01	-227	01
6717780-51	29-10-00-02	-160	01	6717792-8	32-43-00-02	-005	01
6717784-19	29-23-05-01	-088	01	6717792-9	29-10-00-07	-005	01
6717784-3	29-23-00-01	-002	01	6717793-2	78-30-10-02	-018	01
6717784-34	29-23-00-01	-376	01	6717793-3	78-30-10-02	-004	01
6717784-35	29-23-00-01	-382	01	6717796-11	29-23-00-01	-150	01
6717784-37	29-23-00-01	-394	01	6717796-13	29-23-00-01	-092	01
6717784-38	29-23-00-01	-175	01	6717796-14	29-23-00-01	-314	01
6717784-4	29-23-00-01	-020	01	6717796-15	29-23-00-01	-230	01
6717784-5	29-23-00-01	-004	01	6717796-16	29-23-00-01	-162	01
6717786-11	32-51-05-01	-105	01	6717796-17	29-23-00-01	-228	01
6717786-12	32-30-00-03	-007	01	6717796-18	29-23-00-01	-302	01
6717786-16	32-51-00-01	-086	01	6717796-19	29-23-00-01	-022	01
6717786-18	32-51-00-01	-084	01	6717796-6	29-23-00-01	-322	01
6717786-19	32-51-00-01	-104	01	6717796-7	29-23-00-01	-239	01
6717786-20	32-51-05-01	-106	01	6717796-9	29-23-00-01	-320	01
6717786-21	32-30-00-03	-008	01	6717798-1	29-10-00-06	-183	01
6717786-22	32-30-00-03	-006	01	6717798-2	29-10-00-06	-020	01
6717786-23	32-51-00-01	-105	01	6717798-3	29-10-00-06	-030	01
6717786-24	32-30-00-03	-005	01	6717798-4	29-10-00-06	-199	01
6717788-11	32-33-00-01	-160	01	6717798-5	29-10-00-06	-098	01
6717788-12	29-10-00-07	-023	01	6717800-1	29-10-00-01	-041	01
6717788-13	29-10-00-07	-024	01	6717800-4	29-10-00-01	-004	01
6717788-14	32-49-00-02	-011	01	6717800-5	29-10-00-01	-008	01
6717788-21	32-30-00-03	-078	01	6717800-6	29-10-00-01	-164	01
6717788-22	32-30-00-03	-080	01	6717800-7	29-10-00-01	-161	01
6717788-23	32-30-00-03	-077	01	6717801-2	29-23-05-01	-155	01
6717788-24	32-30-00-03	-079	01	6717801-3	29-23-05-01	-150	01
6717788-27	32-33-00-01	-151	01	6717801-4	29-23-05-01	-158	01

© Cessna Aircraft Company

PART NUMBER	CH SEC SUBJ FIG	ITEM	REQ	PART NUMBER	CH SEC SUBJ FIG	ITEM	REQ
6717829-10	29-10-00-08	-002	01	6718310-23	24-30-30-01	-044	01
6717829-12	29-10-00-08	-075	01	6718311-15	24-35-00-01	-019	01
6717829-13	29-10-00-08	-016	01	6718311-17	24-35-00-01	-017	AR
6717829-14	29-10-00-08	-066	01	6718312-2	52-40-01-01	-023	01
6717829-15	29-10-00-08	-109	01	6718314-4	11-N-23-02	-002	01
6717829-2	29-10-00-08	-026	01	6718314-6	33-30-10-01	-014	01
6717829-3	29-10-00-08	-025	01	6718316-10	52-40-19-01	-013	01
6717829-4	29-10-00-08	-024	01	6718316-18	52-40-19-01	-008	01
6717829-6	29-10-00-08	-001	01	6718316-19	52-40-19-01	-010	01
6717829-7	29-10-00-08	-023	01	6718316-22	52-40-19-01	-014	01
6717829-9	29-10-00-08	-011	01	6718316-26	52-40-19-01	-001	01
6717829-9	29-10-00-08	-089	01	6718316-27	52-40-19-01	-003	01
6718017-2	31-20-00-01	-007	01	6718418-2	76-12-00-01	-001	04
6718021-20	27-24-00-01	-012A	01	6718418-4	76-12-00-01	-003	04
6718021-21	27-24-00-01	-012	01	6718420-15	24-50-05-01	-011	01
6718021-23	27-24-00-01	-013	01	6718420-16	24-50-05-01	-012	01
6718022-2	27-24-00-01	-011	01	6718425-11	33-30-20-01	-016	01
6718022-3	27-24-00-01	-007	01	6718425-13	11-N-23-01	-008	01
6718022-5	27-24-00-01	-014	01	6718425-5	33-30-20-01	-018	01
6718022-8	27-24-00-01	-001	NP	6718432-12	24-60-10-01	-019	04
6718022-8	27-24-00-01	-002	NP	6718432-12	24-60-10-02	-019	04
6718022-9	27-24-00-01	-003	01	6718434-20	24-60-10-01	-336	AR
6718022-9	27-24-00-01	-004	01	6718434-20	24-60-10-02	-335	AR
6718025-8	24-20-25-01	-001	01	6718434-20	24-60-15-01	-092	06
6718025-8	24-20-25-01	-002	01	6718439-16	24-60-15-01	-013	18
6718189-1	24-60-05-01	-084	01	6718439-33	24-60-10-01	-253	01
6718189-1	24-60-05-01	-085	01	6718439-33	24-60-10-02	-253	01
6718189-1	24-60-05-02	-083	01	6718458-5	24-60-25-01	-011	01
6718189-1	24-60-05-02	-089	01	6718464-5	24-60-25-01	-008	01
6718202-13	52-70-40-01	-001	01	6718464-5	24-60-25-01	-021	01
6718202-14	52-70-40-01	-004	01	6718473-5	24-60-25-01	-005	01
6718207-3	28-40-10-01	-003	02	6718473-5	24-60-25-01	-018	01
6718240-2	24-60-35-01	-014	04	6718476-11	24-60-25-01	-023	01
6718240-2	24-60-35-01	-028	06	6718482-13	24-60-25-01	-007	01
6718302-4	24-30-30-01	-079	01	6718482-13	24-60-25-01	-020	01
6718302-5	24-30-30-01	-085	01	6718507-3	24-60-00-01	-011	01
6718309-10	25-70-00-01	-007	01	6718507-3	33-40-35-02	-035	02
6718309-15	25-70-00-01	-038	01	6718507-5	24-60-00-01	-012	01
6718309-16	25-70-00-01	-039	01	6718507-5	33-40-35-02	-032	01
6718309-22	25-70-00-01	-010	01	6718706-4	27-50-20-01	-041	01
6718309-25	25-70-00-01	-011	01	6718707-5	27-50-20-01	-019	01
6718309-26	25-70-00-01	-012	01	6718708-4	27-50-20-01	-017	01
6718309-27	25-70-00-01	-013	02	6719001-10	25-80-02-04	-008	02
6718309-29	25-70-00-01	-017	01	6719001-11	25-80-02-04	-007	02
6718309-31	25-70-00-01	-025	01	6719001-12	25-80-02-04	-010	02
6718309-32	25-70-00-01	-026	01	6719001-13	25-80-02-04	-009	02
6718309-33	25-70-00-01	-029	01	6719001-14	25-80-02-04	-012	02
6718309-34	25-70-00-01	-030	01	6719001-15	25-80-02-04	-011	02
6718309-40	25-70-00-01	-028	01	6719001-16	25-80-02-04	-076	06
6718309-48	25-70-00-01	-031	01	6719001-16	25-80-02-04	-151	04
6718309-52	25-70-00-01	-035	01	6719001-17	25-80-02-04	-153	10
6718309-53	25-70-00-01	-040	02	6719001-18	25-80-02-04	-152	04
6718309-9	25-70-00-01	-006	01	6719001-19	25-80-02-04	-079	05
6718310-11	24-30-30-01	-003	02	6719001-19	25-80-02-04	-154	05
6718310-13	24-30-30-01	-005	02	6719001-2	25-80-02-04	-002	06
6718310-16	24-30-30-01	-041	01	6719001-2	25-80-02-04	-075	06
6718310-17	24-30-30-01	-042	01	6719001-2	25-80-02-04	-150	04
6718310-18	24-30-30-01	-043	01	6719001-20	25-80-02-04	-080	02
6718310-19	24-30-30-01	-040	01	6719001-20	25-80-02-04	-155	02
6718310-20	24-30-30-01	-047	01	6719001-21	25-80-02-04	-085	02
6718310-21	24-30-30-01	-046	01	6719001-21	25-80-02-04	-160	02
6718310-22	24-30-30-01	-045	01	6719001-22	25-80-02-04	-081	05

© Cessna Aircraft Company

PART NUMBER	CH SEC SUBJ FIG	ITEM	REQ	PART NUMBER	CH SEC SUBJ FIG	ITEM	REQ
6719001-22	25-80-02-04	-156	05	6719045-12	25-50-12-01	-001	01
6719001-23	25-80-02-04	-082	02	6719045-13	11-N-23-01	-005	NP
6719001-23	25-80-02-04	-157	02	6719045-15	25-50-12-01	-005	AR
6719001-24	25-80-02-04	-083	10	6719045-16	25-50-12-01	-006	AR
6719001-24	25-80-02-04	-158	10	6719045-18	25-50-12-01	-003	01
6719001-25	25-80-02-04	-084	04	6719048-126	25-50-00-01	-225	02
6719001-25	25-80-02-04	-159	04	6719048-170	25-50-00-01	-178	01
6719001-26	25-80-02-04	-077	10	6719048-413	25-50-00-01	-238	01
6719001-27	25-80-02-04	-078	04	6719048-417	25-50-00-01	-244	01
6719001-3	25-80-02-04	-001	06	6719048-422	25-50-00-01	-167	01
6719001-4	25-80-02-04	-004	04	6719048-423	25-50-00-01	-159	01
6719001-5	25-80-02-04	-003	04	6719048-424	25-50-00-01	-169	01
6719001-6	25-80-02-04	-006	02	6719048-430	25-50-00-01	-175	01
6719001-7	25-80-02-04	-005	02	6719048-448	25-50-00-01	-177	04
6719001-8	25-80-02-04	-013	02	6719048-449	25-50-00-01	-164	10
6719001-9	25-80-02-04	-014	02	6719048-467	25-50-00-01	-161	01
6719001-9	25-80-02-04	-086	05	6719048-468	25-50-00-01	-165	01
6719001-9	25-80-02-04	-161	05	6719048-471	25-50-00-01	-097	01
6719003-26	25-80-02-02	-007	01	6719048-480	25-50-00-01	-236	01
6719003-28	25-80-02-02	-004	04	6719048-481	25-50-00-01	-240	01
6719003-30	25-80-02-02	-009	01	6719048-482	25-50-00-01	-171	01
6719003-31	25-80-02-02	-015	01	6719048-485	25-50-00-01	-230	01
6719003-32	25-80-02-02	-013	05	6719048-486	25-50-00-01	-173	01
6719003-33	25-80-02-02	-016	01	6719048-494	25-50-00-01	-227	01
6719003-35	25-80-02-02	-017	01	6719048-497	25-50-00-01	-098	01
6719003-37	25-80-02-02	-018	01	6719048-63	25-50-00-01	-008	16
6719003-40	25-80-02-02	-011	01	6719048-98	25-50-00-01	-001	01
6719003-41	25-80-02-02	-006	01	6719052-35	21-23-20-01	-046	02
6719003-42	25-80-02-02	-001	01	6719052-8	21-23-20-01	-044	02
6719003-43	25-80-02-02	-010	01	6719066-105	52-10-19-01	-181	01
6719003-45	25-80-02-02	-002	01	6719066-107	52-10-19-01	-184	01
6719012-13	52-10-31-01	-108	04	6719066-109	52-10-19-01	-185	01
6719012-37	52-10-31-01	-002	01	6719066-110	52-10-19-01	-180	01
6719012-38	52-10-31-01	-011	01	6719066-111	52-10-19-01	-179	01
6719025-10	38-30-15-01	-014	01	6719066-112	52-10-19-01	-080	0
6719025-11	38-30-15-01	-015	01	6719066-114	52-10-19-01	-015	03
6719025-12	38-30-15-01	-002	01	6719066-115	52-10-19-01	-076	01
6719025-9	38-30-15-01	-010	01	6719066-116	52-10-19-01	-166	01
6719026-11	11-N-23-02	-152	01	6719066-121	52-10-19-01	-005	01
6719026-5	38-30-00-01	-013	01	6719066-122	52-10-19-01	-004	01
6719032-100	21-25-00-02	-001	04	6719066-124	52-10-19-01	-090	AR
6719032-107	21-25-75-01	-002	01	6719066-125	52-10-19-01	-020	01
6719032-121	21-25-75-01	-005	01	6719066-126	52-10-19-01	-021	01
6719032-17	21-25-75-01	-006	01	6719066-129	52-10-19-01	-014	01
6719032-19	21-25-75-01	-014	01	6719066-131	52-10-19-01	-018	01
6719032-20	21-25-75-01	-015	01	6719066-132	52-10-19-01	-019	01
6719032-26	21-25-00-02	-002	04	6719066-133	52-10-19-01	-009	01
6719032-86	21-25-75-01	-007	01	6719066-136	52-10-19-01	-008	01
6719032-91	21-25-00-02	-007	02	6719066-137	52-10-19-01	-001	01
6719036-17	52-10-31-01	-107	01	6719066-43	52-10-19-01	-027	01
6719036-19	52-10-31-01	-106	01	6719066-44	52-10-19-01	-026	02
6719036-2	52-10-31-01	-096	01	6719066-46	52-10-19-01	-155	01
6719036-3	52-10-31-01	-100	NP	6719066-47	52-10-19-01	-037	01
6719036-32	52-10-31-01	-092	01	6719066-49	52-10-19-01	-156	01
6719036-35	52-10-31-01	-104	NP	6719066-50	52-10-19-01	-160	01
6719036-36	52-10-31-01	-091	01	6719066-51	52-10-19-01	-161	01
6719036-40	52-10-31-01	-104A	01	6719066-52	52-10-19-01	-162	01
6719040-2	38-30-05-01	-006	01	6719066-55	52-10-19-01	-033	01
6719041-1	52-40-15-01	-001	01	6719066-57	52-10-19-01	-025	01
6719041-10	52-40-15-01	-011	01	6719066-59	52-10-19-01	-024	01
6719041-11	52-40-15-01	-010	01	6719066-61	52-10-19-01	-023	01
6719041-12	52-40-15-01	-009	01	6719066-63	52-10-19-01	-022	01

© Cessna Aircraft Company

PART NUMBER	CH SEC SUBJ FIG	ITEM	REQ	PART NUMBER	CH SEC SUBJ FIG	ITEM	REQ
6719066-67	52-10-19-01	-035	01	6719073-144	25-80-02-01	-226	01
6719066-69	52-10-19-01	-167	01	6719073-147	25-80-02-01	-079	01
6719066-71	52-10-19-01	-165	01	6719073-15	25-80-02-01	-078	01
6719066-75	52-10-19-01	-006	01	6719073-16	25-80-02-01	-153	01
6719066-76	52-10-19-01	-007	01	6719073-17	25-80-02-01	-077	01
6719066-78	52-10-19-01	-010	01	6719073-18	25-80-02-01	-152	01
6719066-79	52-10-19-01	-012	01	6719073-19	25-80-02-01	-076	01
6719066-84	52-10-19-01	-150	01	6719073-20	25-80-02-01	-151	01
6719066-89	52-10-19-01	-157	01	6719073-21	25-80-02-01	-075	01
6719066-94	52-10-19-01	-175	01	6719073-22	25-80-02-01	-150	01
6719066-95	52-10-19-01	-088	02	6719073-23	25-80-02-01	-084	01
6719066-96	52-10-19-01	-013	01	6719073-24	25-80-02-01	-159	01
6719068-15	25-80-01-05	-002	01	6719073-25	25-80-02-01	-085	01
6719068-17	25-80-01-05	-001	01	6719073-26	25-80-02-01	-160	01
6719073-10	25-80-02-01	-156	01	6719073-27	25-80-02-01	-086	01
6719073-100	25-80-02-01	-187	01	6719073-28	25-80-02-01	-161	01
6719073-101	25-80-02-01	-112	01	6719073-31	25-80-02-01	-087	01
6719073-102	25-80-02-01	-186	01	6719073-32	25-80-02-01	-163	01
6719073-103	25-80-02-01	-111	01	6719073-33	25-80-02-01	-088	01
6719073-104	25-80-02-01	-185	01	6719073-34	25-80-02-01	-162	01
6719073-105	25-80-02-01	-110	01	6719073-35	25-80-02-01	-089	01
6719073-106	25-80-02-01	-184	01	6719073-37	25-80-02-01	-090	01
6719073-107	25-80-02-01	-029	01	6719073-38	25-80-02-01	-164	01
6719073-108	25-80-02-01	-037	01	6719073-39	25-80-02-01	-091	01
6719073-109	25-80-02-01	-030	01	6719073-40	25-80-02-01	-165	01
6719073-11	25-80-02-01	-080	01	6719073-41	25-80-02-01	-092	01
6719073-110	25-80-02-01	-036	01	6719073-42	25-80-02-01	-166	01
6719073-111	25-80-02-01	-031	01	6719073-43	25-80-02-01	-096	01
6719073-112	25-80-02-01	-035	01	6719073-44	25-80-02-01	-170	01
6719073-113	25-80-02-01	-032	01	6719073-45	25-80-02-01	-095	01
6719073-114	25-80-02-01	-033	01	6719073-46	25-80-02-01	-169	01
6719073-115	25-80-02-01	-019	01	6719073-47	25-80-02-01	-094	01
6719073-116	25-80-02-01	-034	01	6719073-48	25-80-02-01	-168	01
6719073-117	25-80-02-01	-020	01	6719073-49	25-80-02-01	-093	01
6719073-118	25-80-02-01	-028	01	6719073-5	25-80-02-01	-083	01
6719073-119	25-80-02-01	-021	01	6719073-50	25-80-02-01	-167	01
6719073-12	25-80-02-01	-155	01	6719073-51	25-80-02-01	-097	01
6719073-120	25-80-02-01	-027	01	6719073-52	25-80-02-01	-171	01
6719073-121	25-80-02-01	-022	01	6719073-53	25-80-02-01	-098	01
6719073-122	25-80-02-01	-026	01	6719073-54	25-80-02-01	-172	01
6719073-123	25-80-02-01	-023	01	6719073-59	25-80-02-01	-100	01
6719073-124	25-80-02-01	-024	01	6719073-6	25-80-02-01	-158	01
6719073-125	25-80-02-01	-011	01	6719073-60	25-80-02-01	-174	01
6719073-126	25-80-02-01	-025	01	6719073-61	25-80-02-01	-099	01
6719073-127	25-80-02-01	-012	01	6719073-62	25-80-02-01	-173	01
6719073-128	25-80-02-01	-018	01	6719073-69	25-80-02-01	-101	01
6719073-129	25-80-02-01	-013	01	6719073-7	25-80-02-01	-081	01
6719073-130	25-80-02-01	-017	01	6719073-70	25-80-02-01	-175	01
6719073-131	25-80-02-01	-014	01	6719073-71	25-80-02-01	-102	01
6719073-132	25-80-02-01	-016	01	6719073-72	25-80-02-01	-176	01
6719073-133	25-80-02-01	-007	01	6719073-79	25-80-02-01	-103	01
6719073-134	25-80-02-01	-015	01	6719073-8	25-80-02-01	-157	01
6719073-135	25-80-02-01	-008	01	6719073-80	25-80-02-01	-177	01
6719073-136	25-80-02-01	-010	01	6719073-81	25-80-02-01	-104	01
6719073-137	25-80-02-01	-003	01	6719073-82	25-80-02-01	-178	01
6719073-138	25-80-02-01	-009	01	6719073-83	25-80-02-01	-105	01
6719073-139	25-80-02-01	-004	01	6719073-84	25-80-02-01	-179	01
6719073-14	25-80-02-01	-154	01	6719073-85	25-80-02-01	-106	01
6719073-140	25-80-02-01	-006	01	6719073-86	25-80-02-01	-180	01
6719073-141	25-80-02-01	-038	01	6719073-87	25-80-02-01	-108	01
6719073-142	25-80-02-01	-005	01	6719073-88	25-80-02-01	-181	01
6719073-143	25-80-02-01	-225	01	6719073-89	25-80-02-01	-107	01

© Cessna Aircraft Company

PART NUMBER	CH SEC SUBJ FIG	ITEM	REQ
6719073-9	25-80-02-01	-082	01
6719073-90	25-80-02-01	-182	01
6719073-91	25-80-02-01	-109	01
6719073-92	25-80-02-01	-183	01
6719073-93	25-80-02-01	-116	01
6719073-94	25-80-02-01	-190	01
6719073-95	25-80-02-01	-115	01
6719073-96	25-80-02-01	-189	01
6719073-97	25-80-02-01	-114	01
6719073-98	25-80-02-01	-188	01
6719073-99	25-80-02-01	-113	01
6719074-2	52-10-31-01	-019	01
6719074-3	52-10-31-01	-020	01
6719074-4	52-10-31-01	-021	01
6719074-5	52-10-31-01	-022	01
6719075-10	25-80-02-03	-006	01
6719075-11	25-80-02-03	-002	01
6719075-12	25-80-02-03	-029	01
6719075-13	25-80-02-03	-026	01
6719075-14	25-80-02-03	-023	01
6719075-15	25-80-02-03	-020	01
6719075-16	25-80-02-03	-017	01
6719075-18	25-80-02-03	-011	01
6719075-19	25-80-02-03	-009	01
6719075-2	25-80-02-03	-032	01
6719075-20	25-80-02-03	-010	01
6719075-21	25-80-02-03	-004	01
6719075-23	25-80-02-03	-031	01
6719075-24	25-80-02-03	-028	01
6719075-25	25-80-02-03	-025	01
6719075-26	25-80-02-03	-022	01
6719075-27	25-80-02-03	-019	01
6719075-28	25-80-02-03	-016	01
6719075-29	25-80-02-03	-015	01
6719075-3	25-80-02-03	-030	01
6719075-30	25-80-02-03	-013	01
6719075-31	25-80-02-03	-007	01
6719075-32	25-80-02-03	-005	01
6719075-33	25-80-02-03	-001	01
6719075-34	25-80-02-03	-003	01
6719075-35	25-80-02-03	-012	01
6719075-4	25-80-02-03	-027	01
6719075-5	25-80-02-03	-024	01
6719075-6	25-80-02-03	-021	01
6719075-7	25-80-02-03	-018	01
6719075-8	25-80-02-03	-014	01
6719075-9	25-80-02-03	-008	01
6719078-10	27-36-00-01	-202	01
6719078-6	27-36-00-01	-192	01
6719078-7	27-36-00-01	-200	02
6719078-7	27-36-00-01	-201	01
6719078-8	27-36-00-01	-193	01
6719079-10	25-80-01-04	-087	01
6719079-11	25-80-01-04	-004	01
6719079-12	25-80-01-04	-086	01
6719079-13	25-80-01-04	-005	01
6719079-14	25-80-01-04	-085	01
6719079-15	25-80-01-04	-006	01
6719079-16	25-80-01-04	-084	01
6719079-17	25-80-01-04	-007	01
6719079-18	25-80-01-04	-083	01
6719079-19	25-80-01-04	-008	01
6719079-20	25-80-01-04	-082	01
6719079-21	25-80-01-04	-009	01
6719079-22	25-80-01-04	-081	01
6719079-23	25-80-01-04	-010	01
6719079-24	25-80-01-04	-080	01
6719079-25	25-80-01-04	-011	01
6719079-26	25-80-01-04	-079	01
6719079-27	25-80-01-04	-012	01
6719079-28	25-80-01-04	-078	01
6719079-29	25-80-01-04	-013	01
6719079-30	25-80-01-04	-077	01
6719079-31	25-80-01-04	-014	01
6719079-32	25-80-01-04	-076	01
6719079-33	25-80-01-04	-015	01
6719079-34	25-80-01-04	-075	01
6719079-4	25-80-01-04	-001	01
6719079-5	25-80-01-04	-002	01
6719079-6	25-80-01-04	-003	01
6719079-7	25-80-01-04	-090	01
6719079-8	25-80-01-04	-089	01
6719079-9	25-80-01-04	-088	01
6719080-14	52-11-20-01	-012	01
6719080-15	52-11-20-01	-001	01
6719080-21	52-11-20-01	-004	01
6719080-24	52-11-20-01	-003	01
6719080-27	52-11-20-01	-002	01
6719084-10	25-50-15-01	-089	02
6719084-25	25-50-15-01	-036	01
6719084-25	25-50-15-01	-085	02
6719084-26	25-50-15-01	-042	02
6719084-34	25-50-15-01	-014	02
6719084-35	25-50-15-01	-015	02
6719084-51	25-50-15-01	-080	01
6719084-52	25-50-15-01	-079	01
6719084-59	25-50-15-01	-021	02
6719084-69	25-50-15-01	-002	01
6719084-70	25-50-15-01	-001	01
6719084-72	25-50-15-01	-033	01
6719084-8	25-50-15-01	-034	01
6719084-8	25-50-15-01	-082	01
6719084-80	25-50-15-01	-032	01
6719084-81	25-50-15-01	-027	02
6719084-9	25-50-15-01	-081	01
6719086-10	25-10-01-02	-003	02
6719086-7	25-10-01-02	-001	04
6719091-6	38-32-05-01	-011	01
6719100-2	52-30-40-01	-001	01
6719100-6	52-30-40-01	-005	01
6719109-2	25-10-01-01	-007	01
6719109-3	25-10-01-01	-002	01
6719109-5	25-10-01-01	-004	01
6719113-2	52-10-31-01	-001	01
6719114-10	52-10-31-01	-004	01
6719114-3	52-10-31-01	-075	01
6719114-4	52-10-31-01	-076	01
6719114-7	52-10-31-01	-079	01
6719114-8	52-10-31-01	-080	01
6719114-9	52-10-31-01	-030	01
6719115-2	52-10-31-01	-012	01
6719116-6	52-10-31-01	-005	01
6719116-7	52-10-31-01	-006	01
6719117-1	52-10-31-01	-086	01

© Cessna Aircraft Company

PART NUMBER	CH SEC SUBJ FIG	ITEM	REQ
6719117-15	52-10-31-01	-078	01
6719117-2	52-10-31-01	-087	01
6719117-25	52-10-31-01	-031	01
6719117-27	52-10-31-01	-084	01
6719117-28	52-10-31-01	-085	01
6719117-29	52-10-31-01	-114	01
6719117-3	52-10-31-01	-007	01
6719117-4	52-10-31-01	-008	01
6719117-5	52-10-31-01	-009	01
6719117-8	52-10-31-01	-083	01
6719117-9	52-10-31-01	-023	01
6719124-11	25-50-15-01	-008	01
6719124-4	25-50-15-01	-044	01
6719124-5	25-50-15-01	-037	01
6719124-6	25-50-15-01	-043	02
6719124-8	25-50-15-01	-010	06
6719124-9	25-50-15-01	-009	01
6719158-22	25-50-00-01	-233	01
6719158-23	25-50-00-01	-150	01
6719158-26	25-50-00-01	-152	01
6719158-27	25-50-00-01	-153	01
6719158-29	25-50-00-01	-158	01
6719161-11	25-50-00-01	-251	01
6719161-2	25-50-00-01	-247	01
6719161-3	25-50-00-01	-248	01
6719161-4	25-50-00-01	-249	02
6719161-5	25-50-00-01	-252	02
6719161-6	25-50-00-01	-253	01
6719161-9	25-50-00-01	-250	01
6719170-2	25-10-01-01	-012	01
6719170-3	25-10-01-01	-013	01
6719170-7	25-10-01-01	-014	01
6719170-9	25-10-01-01	-009	01
6719174-10	25-50-15-01	-016	01
6719174-11	25-50-15-01	-011	01
6719174-2	25-50-15-01	-030	01
6719174-3	25-50-15-01	-075	01
6719174-4	25-50-15-01	-024	01
6719174-5	25-50-15-01	-023	01
6719174-6	25-50-15-01	-086	02
6719174-9	25-50-15-01	-017	01
6719192-1	52-10-31-01	-089	01
6719192-3	52-10-31-01	-090	01
6719206-10	25-50-00-01	-091	01
6719206-12	25-50-00-01	-014	01
6719206-24	25-50-00-01	-095	01
6719206-25	25-50-00-01	-023	02
6719206-28	25-50-00-01	-018	02
6719206-29	25-50-00-01	-019	02
6719206-30	25-50-00-01	-092	02
6719206-31	25-50-00-01	-082	01
6719206-32	25-50-00-01	-083	01
6719206-36	25-50-00-01	-086	01
6719206-37	25-50-00-01	-087	01
6719206-40	25-50-00-01	-003	01
6719206-42	25-50-00-01	-010	01
6719206-43	25-50-00-01	-090	01
6719206-47	25-50-00-01	-078	02
6719206-48	25-50-00-01	-075	02
6719252-2	25-10-01-02	-005	01
6719252-6	25-10-01-02	-008	02
6719256-1	25-80-02-05	-002	04
6719256-2	25-80-02-05	-003	07
6719256-3	25-80-02-05	-005	02
6719256-4	25-80-02-05	-007	02
6719256-6	25-80-02-05	-004	02
6719256-7	25-80-02-05	-006	02
6719256-8	25-80-02-05	-001	02
6719289-1	52-10-31-01	-100A	01
6719508-2	21-60-00-01	-152A	01
6719509-1	21-25-00-02	-003	01
6719509-4	21-25-00-02	-015	01
6719509-7	21-25-00-02	-040	01
6719515-2	25-80-02-02	-008	01
6719515-3	25-80-02-02	-019	01
6719515-4	25-80-02-02	-014	01
6719515-5	25-80-02-02	-012	01
6719515-6	25-80-02-02	-005	01
6719515-7	25-80-02-02	-003	01
6719523-10	21-25-00-02	-046	01
6719523-11	21-25-00-02	-051	01
6719523-12	21-25-00-02	-044	01
6719523-13	21-25-00-02	-053	01
6719523-14	21-25-00-02	-042	01
6719523-17	21-25-00-02	-041	01
6719523-2	21-25-00-02	-054	01
6719523-3	21-25-00-02	-043	01
6719523-4	21-25-00-02	-052	01
6719523-5	21-25-00-02	-045	01
6719523-6	21-25-00-02	-050	01
6719523-7	21-25-00-02	-047	01
6719523-8	21-25-00-02	-048	01
6719523-9	21-25-00-02	-049	01
6719525-1	21-23-20-01	-040	02
6719525-2	21-23-20-01	-042	01
6719525-3	21-23-20-01	-039	04
6719526-2	21-23-20-01	-038	02
6719526-3	21-23-20-01	-037	02
6719527-10	21-25-20-01	-007A	01
6719527-3	21-25-20-01	-033	01
6719527-4	21-25-20-01	-034	01
6719527-5	21-25-20-01	-045	01
6719527-7	21-25-20-01	-006	01
6719527-8	21-25-20-01	-007	01
6719527-9	21-25-20-01	-006A	01
6719529-1	21-25-00-02	-004	01
6719529-10	21-25-00-02	-029	01
6719529-4	21-25-00-02	-031	01
6719530-1	21-25-75-01	-075	01
6719530-1	25-80-03-01	-016	01
6719530-13	21-25-75-01	-011	01
6719530-14	21-25-75-01	-012	01
6719530-14	25-80-03-01	-119	01
6719530-17	25-80-03-01	-023	01
6719530-2	21-25-75-01	-078	01
6719530-2	25-80-03-01	-078	01
6719530-27	21-25-75-01	-081	01
6719530-28	21-25-75-01	-082	01
6719530-3	25-80-03-01	-004	01
6719530-5	21-25-75-01	-008	01
6719530-5	25-80-03-01	-043	01
6719530-6	21-25-75-01	-009	01
6719530-6	25-80-03-01	-115	01
6719530-7	25-80-03-01	-026	01

© Cessna Aircraft Company

PART NUMBER	CH SEC SUBJ FIG	ITEM	REQ	PART NUMBER	CH SEC SUBJ FIG	ITEM	REQ
6719531-1	25-80-03-01	-013	01	6719636-16	21-28-00-01	-010	01
6719531-14	25-80-03-01	-103	01	6719636-17	25-10-05-01	-010	01
6719531-16	25-80-03-01	-106	01	6719636-18	25-10-05-01	-011	01
6719531-2	25-80-03-01	-075	01	6719636-3	25-10-05-01	-001	01
6719531-3	25-80-03-01	-001	01	6719636-6	21-28-00-01	-003	02
6719531-4	25-80-03-01	-109	01	6719636-7	25-10-05-01	-012	01
6719531-5	25-80-03-01	-039	01	6719636-8	25-10-05-01	-013	01
6719531-6	25-80-03-01	-112	01	6719640-11	21-23-25-01	-008	01
6719535-13	25-80-03-01	-008	01	6719640-12	21-23-25-01	-009	01
6719535-45	25-80-03-01	-097	01	6719640-13	21-23-25-01	-007	01
6719535-49	25-80-03-01	-047	01	6719640-23	21-23-25-01	-002A	01
6719535-50	25-80-03-01	-120	01	6719640-24	21-23-25-01	-003A	01
6719535-56	25-80-03-01	-091	01	6719640-27	21-23-25-01	-008A	01
6719535-57	25-80-03-01	-085	01	6719640-28	21-23-25-01	-009A	01
6719535-60	25-80-03-01	-084	01	6719640-29	21-23-25-01	-002B	01
6719535-62	25-80-03-01	-033	01	6719640-30	21-23-25-01	-003B	01
6719535-63	25-80-03-01	-027	01	6719640-5	21-23-25-01	-002	01
6719538-2	38-30-00-01	-008	01	6719640-6	21-23-25-01	-003	01
6719538-3	38-30-00-01	-009	01	6719680-1	23-50-25-01	-020	01
6719544-1	21-23-20-01	-014	01	6719680-2	23-50-25-01	-021	01
6719544-10	21-23-20-01	-024	01	6719680-5	23-50-25-01	-015	04
6719544-2	21-23-20-01	-015	01	6719680-6	23-50-25-01	-016	04
6719544-9	21-23-20-01	-023	01	6719685-1	21-60-00-01	-150	01
6719551-3	38-32-05-01	-006	02	6721004-12	57-10-01-01	-019	01
6719552-5	38-32-10-01	-024	01	6721004-7	28-20-05-01	-019	01
6719562-13	35-20-10-01	-011	01	6721007-3	32-70-00-01	-008	01
6719565-20	53-20-05-02	-001	01	6721007-4	32-70-00-01	-009	01
6719565-21	53-20-05-02	-003	01	6721007-5	32-70-00-01	-016	01
6719565-22	53-20-05-02	-005	02	6721008-7	32-70-00-01	-001	01
6719565-23	53-20-05-02	-006	02	6721008-8	32-70-00-01	-002	01
6719565-24	53-20-05-02	-007	02	6721008-9	32-70-00-01	-010	01
6719565-25	53-20-05-02	-002	01	6721009-5	57-10-01-01	-001	01
6719565-26	53-20-05-02	-004	01	6721009-6	57-10-01-01	-006	01
6719565-28	53-20-05-02	-008	01	6721009-7	57-10-01-01	-011	01
6719565-29	53-20-05-02	-010	02	6721009-9	57-10-01-01	-016	01
6719565-30	53-20-05-02	-011	01	6721010-1	57-10-02-01	-054	01
6719565-31	53-20-05-02	-013	02	6721010-2	57-10-02-01	-001	01
6719565-32	53-20-05-02	-014	02	6721012-1	57-80-00-01	-079	04
6719565-33	53-20-05-02	-015	01	6721012-3	57-80-00-01	-001	04
6719565-34	53-20-05-02	-012	01	6721019-1	57-10-01-01	-003	01
6719565-47	53-20-05-02	-016	01	6721019-1	57-10-01-01	-008	01
6719565-60	53-20-05-02	-009	01	6721019-1	57-10-01-01	-013	01
6719570-3	21-23-20-01	-018	10	6721047-10	57-10-02-02	-018	01
6719570-5	21-23-20-01	-026	01	6721047-11	57-10-02-02	-022	02
6719570-6	21-23-20-01	-027	01	6721047-12	57-10-02-02	-023	02
6719570-9	21-23-20-01	-028	01	6721047-13	57-10-02-02	-027	01
6719578-1	35-20-00-01	-081	02	6721047-14	57-10-02-02	-028	01
6719578-2	35-20-00-01	-087	02	6721047-15	57-10-02-02	-015	01
6719578-3	35-20-00-01	-078	01	6721047-16	57-10-02-02	-016	01
6719578-4	35-20-00-01	-083	01	6721047-17	57-10-02-02	-003	01
6719578-5	35-20-00-01	-086	01	6721047-18	57-10-02-02	-004	01
6719578-6	35-20-00-01	-088	01	6721047-2	57-10-02-02	-006	01
6719578-7	35-20-00-01	-098	01	6721047-22	57-10-02-02	-005	01
6719583-2	53-20-05-02	-018	NP	6721047-3	57-10-02-02	-001	01
6719583-4	53-20-05-02	-018A	02	6721047-4	57-10-02-02	-002	01
6719605-6	23-70-00-01	-015	01	6721047-5	57-10-02-02	-007	02
6719631-15	33-10-25-01	-001	07	6721047-7	57-10-02-02	-010	01
6719631-7	26-20-05-01	-002	01	6721047-8	57-10-02-02	-011	01
6719636-1	25-10-05-01	-006	01	6721047-9	57-10-02-02	-017	01
6719636-13	21-28-00-01	-008	01	6721049-10	57-10-02-03	-023	02
6719636-14	21-28-00-01	-009	01	6721049-11	57-10-02-03	-042	01
6719636-15	21-28-00-01	-007	01	6721049-12	57-10-02-03	-022	01

© Cessna Aircraft Company

PART NUMBER	CH SEC SUBJ FIG	ITEM	REQ	PART NUMBER	CH SEC SUBJ FIG	ITEM	REQ
6721049-13	57-10-02-03	-024	02	6721069-2	57-10-02-01	-385	01
6721049-14	57-10-02-03	-018	02	6721069-2	57-10-02-03	-013	01
6721049-15	57-10-02-03	-001	01	6721069-3	57-10-02-03	-012	01
6721049-16	57-10-02-03	-002	01	6721069-4	57-10-02-01	-386	01
6721049-17	57-10-02-03	-033	01	6721069-5	57-10-02-01	-387	01
6721049-18	57-10-02-03	-017	02	6721077-1	57-10-02-01	-388	01
6721049-19	57-10-02-03	-005	01	6721078-1	57-10-02-01	-389	01
6721049-20	57-10-02-03	-006	01	6721079-1	57-10-02-01	-390	01
6721049-21	57-10-02-03	-003	01	6721079-2	57-10-02-01	-391	01
6721049-22	57-10-02-03	-004	01	6721079-3	57-10-02-02	-032	01
6721049-31	57-10-02-03	-011	01	6721079-4	57-10-02-01	-392	01
6721049-33	57-10-02-03	-010	01	6721087-3	57-10-02-01	-540	01
6721049-5	57-10-02-03	-041	01	6721088-2	28-10-10-01	-006	06
6721049-6	57-10-02-03	-021	01	6721088-3	57-10-02-01	-541	01
6721049-7	57-10-02-03	-037	01	6721089-1	57-10-02-01	-542	01
6721049-8	57-10-02-03	-028	02	6721089-3	57-10-02-01	-543	01
6721049-9	57-10-02-03	-032	01	6721112-4	57-10-02-01	-022	01
6721055-1	57-10-02-07	-001	01	6721113-1	57-10-02-01	-024	01
6721055-10	57-10-02-07	-037	01	6721113-2	57-10-02-01	-025	01
6721055-2	57-10-02-07	-002	01	6721113-3	57-10-02-01	-050	01
6721055-3	57-10-02-07	-006	01	6721113-4	57-10-02-01	-051	01
6721055-4	57-10-02-07	-007	01	6721114-10	57-10-02-01	-053	01
6721055-5	57-10-02-07	-008	01	6721114-11	57-10-02-01	-055	01
6721055-6	57-10-02-07	-009	01	6721114-13	57-10-02-01	-041	01
6721055-7	57-10-02-07	-020	04	6721114-14	57-10-02-01	-042	01
6721055-7	57-10-02-07	-024	02	6721114-15	57-10-02-01	-046	01
6721055-8	57-10-02-07	-042	02	6721114-16	57-10-02-01	-047	01
6721055-9	57-10-02-07	-036	01	6721114-17	57-10-02-01	-037	01
6721056-1	57-10-02-08	-001	01	6721114-18	57-10-02-01	-038	01
6721056-10	57-10-02-08	-026	01	6721114-19	57-10-02-01	-395	01
6721056-11	57-10-02-08	-031	01	6721114-20	57-10-02-01	-396	01
6721056-12	57-10-02-08	-032	01	6721114-24	57-10-02-01	-036	01
6721056-13	57-10-02-08	-037	01	6721114-25	57-10-02-01	-049	02
6721056-14	57-10-02-08	-038	01	6721114-27	57-10-02-01	-023	01
6721056-15	57-10-02-08	-043	01	6721114-30	57-10-02-01	-040	01
6721056-16	57-10-02-08	-044	01	6721114-31	57-10-02-01	-039	01
6721056-17	57-10-02-07	-012	04	6721114-6	57-10-02-01	-048	02
6721056-17	57-10-02-07	-017	04	6721114-8	57-10-02-01	-045	01
6721056-17	57-10-02-08	-009	01	6721114-9	57-10-02-01	-052	01
6721056-18	57-10-02-07	-028	04	6721122-1	57-10-02-01	-169	01
6721056-18	57-10-02-07	-032	02	6721123-1	57-10-02-01	-253	01
6721056-18	57-10-02-08	-012	04	6721123-2	57-10-02-01	-225	01
6721056-18	57-10-02-08	-016	02	6721123-3	57-10-02-01	-241	01
6721056-2	57-10-02-08	-002	01	6721123-4	57-10-02-01	-226	01
6721056-3	57-10-02-08	-003	01	6721124-1	57-10-02-01	-232	01
6721056-4	57-10-02-08	-004	01	6721124-10	57-10-02-01	-483	01
6721056-5	57-10-02-08	-005	01	6721124-11	57-10-02-01	-257	01
6721056-6	57-10-02-08	-006	01	6721124-12	57-10-02-01	-258	01
6721056-7	57-10-02-08	-020	01	6721124-13	57-10-02-01	-255	01
6721056-8	57-10-02-08	-021	01	6721124-14	57-10-02-01	-256	01
6721056-9	57-10-02-08	-025	01	6721124-15	57-10-02-01	-265	01
6721057-1	57-10-02-01	-015	01	6721124-16	57-10-02-01	-266	01
6721058-1	57-10-02-01	-016	01	6721124-17	57-10-02-01	-263	01
6721059-1	57-10-02-01	-017	01	6721124-18	57-10-02-01	-264	01
6721059-2	57-10-02-01	-018	01	6721124-19	57-10-02-01	-251	01
6721059-3	57-10-02-01	-019	01	6721124-2	57-10-02-01	-233	01
6721059-4	57-10-02-02	-035	01	6721124-20	57-10-02-01	-252	01
6721059-5	57-10-02-01	-020	01	6721124-21	57-10-02-01	-270	02
6721059-6	57-10-02-01	-021	01	6721124-22	57-10-02-01	-269	02
6721067-1	57-10-02-01	-382	01	6721124-23	57-10-02-01	-273	01
6721068-1	57-10-02-01	-383	01	6721124-24	57-10-02-01	-274	01
6721069-1	57-10-02-01	-384	01	6721124-25	57-10-02-01	-271	01

© Cessna Aircraft Company

PART NUMBER	CH SEC SUBJ FIG	ITEM	REQ
6721124-26	57-10-02-01	-272	01
6721124-27	57-10-02-01	-254	02
6721124-3	57-10-02-01	-228	01
6721124-4	57-10-02-01	-229	01
6721124-5	57-10-02-01	-227	01
6721124-6	57-10-02-01	-237	01
6721124-7	57-10-02-01	-236	01
6721124-8	57-10-02-01	-242	02
6721124-9	57-10-02-01	-243	02
6721132-1	57-10-02-01	-564	01
6721138-2	57-10-02-01	-546	01
6721139-1	57-10-02-01	-547	01
6721139-2	57-10-02-01	-548	01
6721139-2	57-10-02-01	-561	01
6721139-3	57-10-02-01	-562	01
6721140-1	57-10-02-01	-565	01
6721140-11	57-10-02-01	-552	01
6721140-15	57-10-02-01	-539	01
6721140-17	57-10-02-01	-549	01
6721140-18	57-10-02-01	-550	01
6721140-2	57-10-02-01	-560	01
6721140-20	57-10-02-01	-566	01
6721140-21	57-10-02-01	-551	04
6721140-22	57-10-02-01	-558	01
6721140-22	57-80-00-01	-028	01
6721140-5	57-10-02-01	-553	01
6721140-6	57-10-02-01	-554	01
6721149-1	57-10-02-01	-563	01
6721150-11	57-10-02-01	-093	01
6721150-12	57-10-02-01	-094	01
6721150-3	57-10-02-01	-075	01
6721150-4	57-10-02-01	-076	01
6721150-7	57-10-02-01	-084	01
6721150-8	57-10-02-01	-085	01
6721167-1	57-80-00-01	-012	01
6721167-2	57-80-00-01	-013	01
6721323-5	57-10-02-01	-556	01
6721323-6	57-10-02-01	-557	01
6721607-1	57-10-02-06	-014	01
6721607-2	57-10-02-06	-015	01
6721608-1	57-10-02-06	-020	01
6721608-2	57-10-02-06	-021	01
6721615-1	57-10-02-01	-101	02
6721615-17	57-10-02-01	-300	02
6721615-18	57-10-02-01	-301	02
6721615-19	57-10-02-01	-319	02
6721615-2	57-10-02-01	-102	02
6721615-21	57-10-02-01	-331	01
6721615-22	57-10-02-01	-332	01
6721615-23	57-10-02-01	-343	02
6721615-3	57-10-02-01	-103	02
6721615-35	57-10-02-01	-107	02
6721615-36	57-10-02-01	-108	02
6721615-37	57-10-02-01	-119	01
6721615-38	57-10-02-01	-120	01
6721615-39	57-10-02-01	-150	01
6721615-4	57-10-02-01	-114	02
6721615-40	57-10-02-01	-151	01
6721615-41	57-10-02-01	-162	01
6721615-42	57-10-02-01	-163	01
6721615-43	57-10-02-01	-305	01
6721615-44	57-10-02-01	-306	01
6721615-45	57-10-02-01	-312	01
6721615-46	57-10-02-01	-313	01
6721615-47	57-10-02-01	-324	02
6721615-48	57-10-02-01	-325	02
6721615-49	57-10-02-01	-336	01
6721615-5	57-10-02-01	-125	01
6721615-50	57-10-02-01	-337	01
6721615-51	57-10-02-01	-348	01
6721615-52	57-10-02-01	-349	01
6721615-6	57-10-02-01	-126	01
6721615-7	57-10-02-01	-157	01
6721615-8	57-10-02-01	-158	01
6721617-1	57-10-02-01	-397	01
6721617-10	57-10-02-01	-470	01
6721617-11	57-10-02-01	-484	01
6721617-12	57-10-02-01	-485	01
6721617-13	57-10-02-01	-497	01
6721617-14	57-10-02-01	-498	01
6721617-15	57-10-02-01	-499	01
6721617-16	57-10-02-01	-500	01
6721617-17	57-10-02-01	-525	01
6721617-18	57-10-02-01	-526	01
6721617-19	57-10-02-01	-399	04
6721617-19	57-10-02-01	-412	03
6721617-2	57-10-02-01	-398	01
6721617-20	57-10-02-01	-471	02
6721617-20	57-10-02-01	-486	02
6721617-21	57-10-02-01	-527	02
6721617-23	57-10-02-01	-450	01
6721617-24	57-10-02-01	-451	01
6721617-3	57-10-02-01	-410	01
6721617-4	57-10-02-01	-411	01
6721617-7	57-10-02-01	-452	01
6721617-8	57-10-02-01	-453	01
6721617-9	57-10-02-01	-469	01
6721626-10	57-10-02-04	-035	01
6721626-11	57-10-02-04	-091	01
6721626-12	57-10-02-04	-110	01
6721626-13	57-10-02-04	-004	01
6721626-14	57-10-02-04	-024	01
6721626-15	57-10-02-04	-080	01
6721626-16	57-10-02-04	-098	01
6721626-27	57-10-02-04	-021	04
6721626-27	57-10-02-04	-075	03
6721626-28	57-10-02-04	-001	01
6721626-28	57-10-02-04	-002	03
6721626-28	57-10-02-04	-079	03
6721626-29	57-10-02-04	-022	02
6721626-30	57-10-02-04	-003	01
6721626-34	57-10-02-04	-012	01
6721626-35	57-10-02-04	-031	01
6721626-36	57-10-02-04	-087	01
6721626-37	57-10-02-04	-105	01
6721626-9	57-10-02-04	-015	01
6721630-1	57-10-02-05	-025	01
6721630-10	57-10-02-05	-033	01
6721630-11	57-10-02-05	-034	01
6721630-12	57-10-02-05	-035	01
6721630-13	57-10-02-05	-045	01
6721630-14	57-10-02-05	-046	01
6721630-15	57-10-02-05	-047	01
6721630-15	57-10-02-05	-096	01

© Cessna Aircraft Company

PART NUMBER	CH SEC SUBJ FIG	ITEM	REQ	PART NUMBER	CH SEC SUBJ FIG	ITEM	REQ
6721630-16	57-10-02-05	-095	01	6721632-21	57-10-02-06	-019	01
6721630-17	57-10-02-05	-094	01	6721632-25	57-10-02-06	-022	01
6721630-19	57-10-02-05	-183	01	6721632-26	57-10-02-06	-023	01
6721630-2	57-10-02-05	-026	01	6721632-27	57-10-02-06	-013	01
6721630-20	57-10-02-05	-184	01	6721632-28	57-10-02-06	-016	01
6721630-21	57-10-02-05	-171	01	6721632-3	57-10-02-06	-009	01
6721630-22	57-10-02-05	-172	01	6721632-4	57-10-02-06	-011	01
6721630-23	57-10-02-05	-185	01	6721632-9	57-10-02-06	-001	01
6721630-24	57-10-02-05	-186	01	6721637-10	53-50-00-02	-082	01
6721630-25	57-10-02-05	-187	01	6721637-9	53-50-00-02	-081	01
6721630-26	57-10-02-05	-188	01	6721640-1	53-50-00-02	-079	01
6721630-27	53-30-00-01	-031	01	6721640-2	53-50-00-02	-083	01
6721630-27	57-10-01-01	-026	02	6721641-1	53-50-00-02	-086	01
6721630-28	53-30-00-01	-033	01	6721641-2	53-50-00-02	-087	01
6721630-28	57-10-01-01	-028	01	6721642-1	53-50-00-02	-075	01
6721630-3	57-10-02-05	-038	01	6721642-2	53-50-00-02	-076	01
6721630-31	57-10-02-05	-030	01	6721702-1	27-13-05-01	-100	01
6721630-32	57-10-02-05	-031	01	6721702-1	27-60-30-01	-106	01
6721630-33	57-10-02-05	-043	01	6721702-19	27-13-05-01	-169	01
6721630-34	57-10-02-05	-044	01	6721702-2	27-13-05-01	-101	01
6721630-37	57-10-02-05	-189	01	6721702-2	27-60-30-01	-107	01
6721630-38	57-10-02-05	-190	01	6721702-5	27-13-05-01	-170	01
6721630-39	57-10-02-05	-023	01	6721702-6	27-13-05-01	-171	01
6721630-4	57-10-02-05	-039	01	6722003-1	57-10-02-01	-375	01
6721630-40	57-10-02-05	-024	01	6722003-1	57-80-00-01	-035	01
6721630-41	57-10-02-05	-036	01	6722003-2	57-10-02-01	-376	01
6721630-42	57-10-02-05	-037	01	6722003-2	57-80-00-01	-036	01
6721630-43	57-10-02-05	-085	01	6722003-3	57-80-00-01	-007	02
6721630-44	57-10-02-05	-086	01	6722003-5	57-80-00-01	-010	AR
6721630-45	57-10-02-05	-165	01	6722005-1	57-10-02-01	-026	01
6721630-46	57-10-02-05	-166	01	6722005-1	57-80-00-01	-091	01
6721630-47	57-10-02-05	-001	05	6722005-10	57-10-02-01	-029	01
6721630-47	57-10-02-05	-075	02	6722005-10	57-80-00-01	-094	01
6721630-48	57-10-02-05	-002	05	6722005-2	57-10-02-01	-027	01
6721630-48	57-10-02-05	-076	02	6722005-2	57-80-00-01	-092	01
6721630-49	57-10-02-05	-150	02	6722005-3	57-10-02-01	-009	01
6721630-50	57-10-02-05	-151	02	6722005-3	57-80-00-01	-102	01
6721630-57	57-10-02-05	-156	01	6722005-4	57-10-02-01	-010	01
6721630-58	57-10-02-05	-157	01	6722005-4	57-80-00-01	-103	01
6721630-59	57-10-02-05	-007	02	6722005-5	57-80-00-01	-090	AR
6721630-60	57-10-02-05	-008	02	6722005-6	57-80-00-01	-085	02
6721630-61	57-10-02-05	-015	02	6722005-9	57-10-02-01	-028	01
6721630-61	57-10-02-05	-082	01	6722005-9	57-80-00-01	-093	01
6721630-61	57-10-02-05	-161	01	6722007-1	57-20-00-08	-082	01
6721630-62	57-10-02-05	-016	02	6722007-10	57-20-00-08	-166	01
6721630-62	57-10-02-05	-081	01	6722007-11	57-20-00-08	-156	01
6721630-62	57-10-02-05	-162	01	6722007-12	57-20-00-08	-157	01
6721630-63	57-10-02-05	-092	01	6722007-2	57-20-00-08	-083	01
6721630-64	57-10-02-05	-093	01	6722007-3	57-20-00-08	-033	01
6721630-65	57-10-02-05	-087	01	6722007-4	57-20-00-08	-034	01
6721630-66	57-10-02-05	-088	01	6722007-5	57-20-00-08	-075	01
6721630-7	57-10-02-05	-176	01	6722007-6	57-20-00-08	-076	01
6721630-8	57-10-02-05	-177	01	6722007-7	57-20-00-08	-031	01
6721630-9	57-10-02-05	-032	01	6722007-8	57-20-00-08	-032	01
6721632-11	57-10-02-06	-002	01	6722007-9	57-20-00-08	-165	01
6721632-12	57-10-02-06	-003	01	6722011-1	57-00-05-01	-161	02
6721632-13	57-10-02-06	-006	01	6722011-2	57-00-05-01	-158	02
6721632-14	57-10-02-06	-008	01	6722011-3	57-00-05-01	-166	02
6721632-15	57-10-02-06	-010	01	6722011-4	57-00-05-01	-162	02
6721632-16	57-10-02-06	-012	01	6722012-9	57-00-05-01	-155	01
6721632-19	57-10-02-06	-017	01	6722016-11	57-10-01-01	-005	01
6721632-20	57-10-02-06	-018	01	6722016-11	57-10-01-01	-010	01

© Cessna Aircraft Company

PART NUMBER	CH SEC SUBJ FIG	ITEM	REQ	PART NUMBER	CH SEC SUBJ FIG	ITEM	REQ
6722016-11	57-10-01-01	-015	01	6722032-1	57-20-00-08	-336	01
6722016-12	57-10-01-01	-024	02	6722032-2	57-20-00-08	-337	01
6722016-13	57-00-05-01	-004	07	6722032-3	57-20-00-08	-338	01
6722016-14	57-00-05-01	-086	02	6722032-4	57-20-00-08	-339	01
6722016-15	57-00-05-01	-010	14	6722032-5	57-20-00-08	-340	01
6722016-16	57-00-05-01	-016	36	6722032-6	57-20-00-08	-341	01
6722016-17	57-00-05-01	-078	26	6722033-1	57-30-00-01	-010	01
6722016-18	57-00-05-01	-022	02	6722033-10	57-20-00-08	-253	04
6722016-19	57-00-05-01	-094	04	6722033-11	57-20-00-08	-247	04
6722017-11	57-00-05-01	-150	01	6722033-12	57-20-00-08	-246	02
6722017-12	57-00-05-01	-151	01	6722033-2	57-30-00-01	-011	01
6722017-7	57-00-05-01	-154	01	6722033-3	57-20-00-08	-239	01
6722021-2	57-80-00-01	-078	AR	6722033-4	57-20-00-08	-240	01
6722021-3	57-80-00-01	-159	AR	6722033-5	57-20-00-08	-238	02
6722022-1	57-20-00-08	-303	01	6722033-6	57-20-00-08	-252	02
6722022-2	57-20-00-08	-304	01	6722033-7	57-20-00-08	-244	02
6722022-3	57-20-00-08	-300	08	6722033-8	57-20-00-08	-245	02
6722022-4	57-20-00-08	-309	02	6722033-9	57-20-00-08	-248	02
6722023-1	57-20-00-08	-321	06	6722039-1	57-00-05-01	-002	07
6722023-2	57-20-00-08	-318	02	6722039-2	57-00-05-01	-008	14
6722024-1	57-20-00-08	-180	01	6722039-3	57-00-05-01	-014	36
6722024-10	57-20-00-08	-151	01	6722039-4	57-00-05-01	-076	26
6722024-11	57-20-00-08	-110	01	6722039-5	57-00-05-01	-020	02
6722024-12	57-20-00-08	-111	01	6722039-6	57-00-05-01	-083	01
6722024-2	57-20-00-08	-181	01	6722039-7	57-00-05-01	-091	01
6722024-3	57-20-00-08	-103	01	6722039-8	57-00-05-01	-099	02
6722024-4	57-20-00-08	-104	01	6722114-1	57-20-00-04	-006	01
6722024-5	57-20-00-08	-152	01	6722114-11	57-20-05-01	-018	02
6722024-6	57-20-00-08	-153	01	6722114-13	57-20-05-01	-027	02
6722024-7	57-20-00-08	-172	01	6722114-16	57-20-05-01	-036	02
6722024-8	57-20-00-08	-173	01	6722114-18	57-20-05-01	-080	02
6722024-9	57-20-00-08	-150	01	6722114-2	57-20-00-04	-007	01
6722025-1	57-20-00-08	-095	01	6722114-21	57-20-05-01	-093	02
6722025-10	57-20-00-08	-019	01	6722114-26	57-20-00-04	-093	01
6722025-11	57-20-00-08	-024	01	6722114-3	57-20-00-04	-008	01
6722025-12	57-20-00-08	-025	01	6722114-4	57-20-00-04	-009	01
6722025-13	57-20-00-08	-016	01	6722114-5	57-20-00-04	-011	01
6722025-14	57-20-00-08	-017	01	6722114-8	57-20-05-01	-005	02
6722025-15	57-20-00-08	-022	01	6722116-1	57-10-02-01	-013	01
6722025-16	57-20-00-08	-023	01	6722116-15	57-10-02-01	-393	01
6722025-17	57-20-00-08	-014	01	6722116-16	57-10-02-01	-394	01
6722025-18	57-20-00-08	-015	01	6722116-2	57-10-02-01	-014	01
6722025-2	57-20-00-08	-096	01	6722116-33	57-20-00-03	-001	01
6722025-3	57-20-00-08	-007	01	6722116-34	57-20-00-03	-002	01
6722025-4	57-20-00-08	-008	01	6722116-45	57-20-00-03	-003	01
6722025-5	57-20-00-08	-001	01	6722116-46	57-20-00-03	-004	01
6722025-6	57-20-00-08	-002	01	6722117-1	57-20-00-04	-001	01
6722025-7	57-20-00-08	-089	01	6722117-2	57-20-00-04	-002	01
6722025-8	57-20-00-08	-090	01	6722118-1	57-20-00-04	-004	01
6722025-9	57-20-00-08	-018	01	6722118-2	57-20-00-04	-005	01
6722028-1	57-20-00-08	-310	01	6722119-1	57-20-00-04	-003	01
6722028-2	57-20-00-08	-311	01	6722119-10	57-20-00-04	-094	01
6722028-3	57-20-00-08	-312	01	6722119-3	57-20-00-03	-015	01
6722028-4	57-20-00-08	-313	01	6722119-4	57-20-00-03	-016	01
6722030-11	57-00-05-01	-007	14	6722119-5	57-20-00-04	-016	01
6722030-13	57-00-05-01	-013	36	6722119-6	57-20-00-04	-017	01
6722030-15	57-00-05-01	-075	26	6722119-7	57-20-00-04	-041	01
6722030-16	57-00-05-01	-019	02	6722119-8	57-20-00-04	-042	01
6722030-17	57-00-05-01	-081	01	6722119-9	57-20-00-04	-083	01
6722030-18	57-00-05-01	-089	02	6722124-1	57-20-00-07	-008	01
6722030-19	57-00-05-01	-097	02	6722124-14	57-20-00-07	-022	01
6722030-9	57-00-05-01	-001	07	6722124-15	57-20-00-07	-021	01

© Cessna Aircraft Company

PART NUMBER	CH SEC SUBJ FIG	ITEM	REQ
6722124-2	57-20-00-07	-009	01
6722124-3	57-20-00-07	-014	01
6722124-4	57-20-00-07	-017	01
6722124-6	57-20-00-07	-026	01
6722124-7	57-20-00-07	-030	01
6722124-8	57-20-00-07	-033	01
6722126-3	57-20-00-07	-001	01
6722126-4	57-20-00-07	-002	01
6722127-3	57-20-00-07	-004	01
6722127-4	57-20-00-07	-005	01
6722128-3	57-20-00-02	-011	01
6722128-4	57-20-00-02	-012	01
6722134-1	57-20-00-05	-011	02
6722134-10	57-20-00-05	-023	02
6722134-11	57-20-00-05	-024	02
6722134-12	57-20-00-05	-025	02
6722134-13	57-20-00-05	-026	02
6722134-14	57-20-00-05	-027	02
6722134-15	57-20-00-05	-028	02
6722134-17	57-20-00-05	-029	02
6722134-18	57-20-00-05	-030	02
6722134-23	57-20-00-05	-034	02
6722134-24	57-20-00-05	-042	01
6722134-25	57-20-00-05	-031	02
6722134-8	57-20-00-05	-020	02
6722134-9	57-20-00-05	-021	02
6722137-1	57-20-00-05	-002	01
6722137-2	57-20-00-05	-003	01
6722138-1	57-20-00-05	-004	01
6722138-2	57-20-00-05	-005	01
6722139-1	57-20-00-05	-006	01
6722139-11	57-20-00-05	-043	01
6722139-2	57-20-00-05	-007	01
6722139-6	57-20-00-05	-022	02
6722139-7	57-20-00-05	-032	01
6722139-8	57-20-00-05	-033	01
6722142-1	57-20-00-02	-013	01
6722142-2	57-20-00-02	-014	01
6722142-3	57-20-00-02	-003	01
6722142-4	57-20-00-02	-004	01
6722143-1	57-20-00-02	-005	01
6722143-2	57-20-00-02	-006	01
6722143-3	57-20-00-02	-007	01
6722143-4	57-20-00-02	-008	01
6722144-3	57-20-00-02	-009	01
6722144-4	57-20-00-02	-010	01
6722144-5	57-20-00-02	-019	01
6722144-6	57-20-00-02	-020	01
6722145-3	57-20-00-02	-023	01
6722145-4	57-20-00-02	-024	01
6722145-5	57-20-00-02	-021	01
6722145-6	57-20-00-02	-022	01
6722146-5	57-20-00-02	-015	01
6722146-6	57-20-00-02	-017	01
6722166-5	57-20-00-02	-029	01
6722166-6	57-20-00-02	-031	01
6722167-1	57-20-00-02	-001	01
6722167-2	57-20-00-02	-002	01
6722172-5	57-20-00-02	-025	01
6722172-6	57-20-00-02	-027	01
6722173-1	57-20-00-02	-030	01
6722173-2	57-20-00-02	-032	01
6722174-1	57-20-00-02	-016	01
6722174-2	57-20-00-02	-018	01
6722178-1	57-20-00-02	-026	01
6722178-2	57-20-00-02	-028	01
6722181-1	28-10-05-01	-009	01
6722181-1	57-20-00-01	-031	01
6722181-2	28-10-05-01	-010	01
6722181-2	57-20-00-01	-032	01
6722181-5	57-20-00-01	-036	01
6722181-6	57-20-00-01	-037	01
6722182-1	28-10-05-01	-007	02
6722185-1	28-10-05-01	-004	02
6722190-7	57-20-00-01	-001	01
6722190-8	57-20-00-01	-002	01
6722191-5	57-20-00-01	-003	01
6722191-6	57-20-00-01	-004	01
6722192-1	57-20-00-01	-005	01
6722192-2	57-20-00-01	-006	01
6722193-1	57-20-00-01	-007	01
6722193-10	57-20-00-01	-028	01
6722193-2	57-20-00-01	-008	01
6722193-3	57-20-00-01	-009	01
6722193-4	57-20-00-01	-010	01
6722193-7	57-20-00-01	-029	01
6722193-8	57-20-00-01	-030	01
6722193-9	57-20-00-01	-027	01
6722194-3	57-20-00-01	-021	01
6722194-4	57-20-00-01	-022	01
6722194-7	57-20-00-01	-019	01
6722194-8	57-20-00-01	-020	01
6722195-1	57-20-00-01	-011	01
6722195-2	57-20-00-01	-012	01
6722195-3	57-20-00-01	-013	01
6722195-4	57-20-00-01	-014	01
6722195-5	57-20-00-01	-015	01
6722195-6	57-20-00-01	-016	01
6722196-1	57-20-00-01	-017	01
6722196-2	57-20-00-01	-018	01
6722196-3	57-20-00-01	-023	01
6722196-4	57-20-00-01	-024	01
6722197-1	57-20-00-01	-025	01
6722197-2	57-20-00-01	-026	01
6722223-1	57-20-00-07	-003	01
6722223-10	57-20-00-07	-039	01
6722223-11	57-20-00-06	-001	01
6722223-2	57-20-00-07	-027	01
6722223-4	57-20-00-07	-083	01
6722223-5	57-20-00-07	-025	01
6722223-6	57-20-00-07	-035	01
6722223-7	57-20-00-07	-034	01
6722223-8	57-20-00-07	-081	01
6722223-9	57-20-00-07	-082	01
6722243-1	57-10-03-06	-011	01
6722243-2	57-10-03-06	-012	01
6722243-3	57-10-03-06	-013	01
6722243-4	57-10-03-06	-014	01
6722245-10	57-10-03-06	-002	01
6722245-11	57-10-03-06	-003	01
6722245-12	57-10-03-06	-004	01
6722245-9	57-10-03-06	-001	01
6722246-1	57-80-00-01	-151	01
6722246-2	57-80-00-01	-150	01

© Cessna Aircraft Company

PART NUMBER	CH SEC SUBJ FIG	ITEM	REQ	PART NUMBER	CH SEC SUBJ FIG	ITEM	REQ
6722248-1	57-10-03-06	-007	02	6722333-4	57-20-01-04	-002	01
6722248-2	57-10-03-06	-009	02	6722334-3	57-20-01-03	-018	02
6722311-1	57-50-00-01	-016	01	6722334-4	57-20-01-03	-011	02
6722311-13	57-50-00-01	-018	01	6722335-3	57-20-01-04	-021	02
6722311-14	57-50-00-01	-019	01	6722335-4	57-20-01-04	-015	02
6722311-15	57-50-00-01	-014	01	6722335-5	57-20-01-04	-018	02
6722311-16	57-50-00-01	-015	01	6722337-1	57-60-00-01	-114	02
6722311-17	57-50-00-01	-005	01	6722351-1	57-20-01-21	-007	01
6722311-18	57-50-00-01	-006	01	6722351-10	57-50-00-01	-025	01
6722311-2	57-50-00-01	-017	01	6722351-2	57-20-01-21	-008	01
6722311-27	57-50-00-01	-001	01	6722351-3	57-20-01-21	-005	01
6722311-28	57-50-00-01	-002	01	6722351-4	57-20-01-21	-006	01
6722311-29	57-50-00-01	-003	01	6722351-5	57-20-01-21	-003	01
6722311-30	57-50-00-01	-004	01	6722351-6	57-20-01-21	-004	01
6722311-31	57-50-00-01	-020	01	6722351-7	57-20-01-21	-001	01
6722311-32	57-50-00-01	-021	01	6722351-8	57-20-01-21	-002	01
6722312-16	57-51-00-02	-009	02	6722351-9	57-50-00-01	-024	01
6722312-17	57-51-00-02	-007	01	6722403-3	30-10-20-01	-082	01
6722312-18	57-51-00-02	-008	01	6722403-4	30-10-20-01	-083	01
6722313-10	57-20-01-21	-010	01	6722406-3	33-40-35-02	-022	01
6722313-3	57-20-00-05	-012	01	6722406-4	33-40-35-02	-023	01
6722313-33	57-20-00-05	-018	01	6722413-1	57-20-00-04	-025	01
6722313-34	57-20-00-05	-019	01	6722413-10	57-20-00-04	-039	01
6722313-4	57-20-00-05	-013	01	6722413-2	57-20-00-04	-026	01
6722313-5	57-20-00-05	-016	01	6722413-5	57-20-00-04	-031	01
6722313-6	57-20-00-05	-017	01	6722413-6	57-20-00-04	-032	01
6722313-9	57-20-01-21	-009	01	6722413-9	57-20-00-04	-038	01
6722314-25	57-51-00-02	-028	02	6722414-1	57-20-00-04	-076	01
6722314-29	57-51-00-02	-010	01	6722414-17	57-20-00-04	-084	01
6722314-30	57-51-00-02	-011	01	6722414-18	57-20-00-04	-085	01
6722314-31	57-51-00-02	-020	01	6722414-2	57-20-00-04	-077	01
6722314-32	57-51-00-02	-021	01	6722414-21	57-20-00-04	-089	01
6722314-33	57-51-00-02	-017	01	6722414-22	57-20-00-04	-090	01
6722314-34	57-51-00-02	-018	01	6722415-1	57-20-00-04	-106	01
6722314-35	57-51-00-02	-026	01	6722415-17	57-20-00-04	-080	01
6722314-36	57-51-00-02	-027	01	6722415-18	57-20-00-04	-081	01
6722314-4	57-51-00-02	-019	02	6722415-19	57-20-00-04	-035	01
6722315-11	57-60-00-01	-095	01	6722415-2	57-20-00-04	-107	01
6722315-12	57-60-00-01	-096	01	6722415-20	57-20-00-04	-036	01
6722315-18	57-60-00-01	-104	01	6722415-3	57-20-00-04	-095	01
6722315-19	57-20-00-05	-044	01	6722415-4	57-20-00-04	-096	01
6722315-27	57-60-00-01	-102	01	6722416-1	57-20-00-04	-097	01
6722315-28	57-60-00-01	-103	01	6722416-2	57-20-00-04	-098	01
6722318-11	57-60-00-01	-112	02	6722416-5	57-20-00-04	-102	01
6722318-12	57-60-00-01	-110	04	6722416-6	57-20-00-04	-103	01
6722318-13	57-60-00-01	-108	02	6722416-9	57-20-00-04	-029	04
6722318-5	57-60-00-01	-113	02	6722422-15	57-20-00-04	-018	01
6722318-6	57-60-00-01	-111	04	6722422-16	57-20-00-04	-019	01
6722318-8	57-60-00-01	-109	02	6722422-5	57-20-00-04	-022	01
6722324-5	57-20-00-05	-008	01	6722424-3	33-40-35-02	-025	01
6722324-6	57-20-00-05	-009	01	6722424-4	33-40-35-02	-026	01
6722327-3	57-20-01-03	-014	01	6722424-5	33-40-35-02	-024	01
6722327-4	57-20-01-03	-015	01	6722424-7	33-40-35-02	-018	01
6722328-1	57-51-00-02	-001	01	6722424-8	33-40-35-02	-019	01
6722328-2	57-51-00-02	-002	01	6722437-1	57-40-00-01	-001	01
6722329-3	57-50-00-01	-048	01	6722437-2	57-40-00-01	-002	01
6722329-4	57-50-00-01	-049	01	6722472-1	57-20-00-03	-007	01
6722329-7	57-50-00-01	-037	01	6722472-2	57-20-00-03	-008	01
6722329-8	57-50-00-01	-038	01	6722472-3	57-20-00-03	-009	01
6722332-5	57-20-01-03	-001	01	6722472-4	57-20-00-03	-010	01
6722332-6	57-20-01-03	-002	01	6722472-5	57-20-00-03	-011	01
6722333-3	57-20-01-04	-001	01	6722472-6	57-20-00-03	-012	01

© Cessna Aircraft Company

PART NUMBER	CH SEC SUBJ FIG	ITEM	REQ	PART NUMBER	CH SEC SUBJ FIG	ITEM	REQ
6722472-7	57-20-00-03	-013	01	6722555-10	57-20-05-02	-090	02
6722472-8	57-20-00-03	-014	01	6722555-2	57-20-05-01	-013	08
6722473-27	27-80-25-01	-005	01	6722555-2	57-20-05-01	-088	06
6722473-28	27-80-25-01	-006	01	6722555-2	57-20-05-02	-013	04
6722473-31	27-80-10-01	-032	02	6722555-2	57-20-05-02	-093	02
6722473-32	27-80-10-01	-034	02	6722555-2	57-20-05-02	-162	02
6722473-33	27-80-10-01	-033	02	6722555-3	57-20-05-01	-012	08
6722473-34	27-80-10-01	-035	02	6722555-3	57-20-05-01	-087	06
6722475-10	57-40-00-02	-028	01	6722555-3	57-20-05-02	-012	04
6722475-13	57-40-00-02	-075	01	6722555-3	57-20-05-02	-092	02
6722475-14	57-40-00-02	-076	01	6722555-3	57-20-05-02	-161	02
6722475-143	57-40-00-02	-001	01	6722555-9	57-20-05-01	-010	08
6722475-144	57-40-00-02	-002	01	6722555-9	57-20-05-01	-085	06
6722475-149	57-40-00-02	-016	01	6722555-9	57-20-05-02	-010	04
6722475-150	57-40-00-02	-017	01	6722555-9	57-20-05-02	-159	02
6722475-17	57-40-00-02	-086	01	6722561-17	57-20-05-02	-006	02
6722475-18	57-40-00-02	-087	01	6722561-25	57-20-05-02	-001	01
6722475-5	57-40-00-02	-023	01	6722561-26	57-20-05-02	-002	01
6722475-6	57-40-00-02	-024	01	6722563-23	57-20-05-02	-019	02
6722475-9	57-40-00-02	-027	01	6722563-29	57-20-05-02	-014	01
6722476-1	57-40-00-02	-091	01	6722563-30	57-20-05-02	-015	01
6722476-10	57-40-00-02	-155	01	6722565-13	57-20-05-02	-078	01
6722476-2	57-40-00-02	-092	01	6722565-14	57-20-05-02	-079	01
6722476-5	57-40-00-02	-150	01	6722565-21	57-20-05-02	-075	01
6722476-6	57-40-00-02	-151	01	6722565-22	57-20-05-02	-076	01
6722476-9	57-40-00-02	-154	01	6722567-21	57-20-05-02	-083	01
6722477-1	57-40-00-02	-031	02	6722567-22	57-20-05-02	-084	01
6722477-1	57-40-00-02	-090	02	6722569-14	57-20-05-02	-154	02
6722478-2	57-40-00-02	-004	01	6722569-23	57-20-05-02	-150	01
6722478-3	57-20-00-04	-023	02	6722569-24	57-20-05-02	-151	01
6722480-1	57-40-00-02	-025	01	6722630-1	57-20-01-05	-008	03
6722480-2	57-40-00-02	-026	01	6722630-1	57-20-01-06	-010	06
6722480-3	57-40-00-02	-029	01	6722630-1	57-20-01-06	-084	04
6722480-4	57-40-00-02	-030	01	6722630-1	57-20-01-06	-094	03
6722480-5	57-40-00-02	-077	01	6722630-1	57-20-01-07	-004	03
6722480-6	57-40-00-02	-078	01	6722630-1	57-20-01-07	-013	05
6722480-7	57-40-00-02	-088	01	6722630-1	57-20-01-07	-084	04
6722480-8	57-40-00-02	-089	01	6722630-1	57-20-01-07	-093	03
6722481-1	57-40-00-02	-093	01	6722630-1	57-20-01-08	-005	03
6722481-2	57-40-00-02	-094	01	6722630-1	57-20-01-08	-013	06
6722481-3	57-40-00-02	-152	01	6722630-1	57-20-01-08	-083	04
6722481-4	57-40-00-02	-153	01	6722630-1	57-20-01-08	-092	03
6722481-5	57-40-00-02	-156	01	6722630-1	57-20-01-09	-006	05
6722481-6	57-40-00-02	-157	01	6722630-1	57-20-01-09	-014	04
6722516-1	28-11-20-01	-098	01	6722630-1	57-20-01-09	-085	03
6722541-27	27-50-00-01	-082	01	6722630-1	57-20-01-09	-094	02
6722541-27	27-50-00-01	-157	02	6722630-1	57-20-01-10	-015	03
6722541-28	27-50-00-01	-083	01	6722630-1	57-20-01-10	-022	04
6722543-13	27-50-00-01	-108	02	6722630-1	57-20-01-10	-082	03
6722543-13	27-50-00-01	-166	02	6722630-1	57-20-01-10	-089	02
6722543-13	27-50-00-01	-253	02	6722630-1	57-20-01-11	-015	04
6722543-13	27-50-00-01	-319	02	6722630-1	57-20-01-11	-024	03
6722543-13	27-50-00-01	-392	02	6722630-1	57-20-01-11	-083	02
6722543-13	27-50-00-01	-469	02	6722630-1	57-20-01-11	-092	02
6722543-15	27-50-00-01	-232	01	6722630-1	57-20-01-12	-010	06
6722543-15	27-50-00-01	-307	02	6722630-1	57-20-01-12	-083	02
6722543-15	27-50-00-01	-382	01	6722630-1	57-20-01-12	-089	01
6722543-15	27-50-00-01	-457	01	6722630-1	57-20-01-13	-018	01
6722543-16	27-50-00-01	-233	01	6722630-1	57-20-01-13	-024	04
6722543-16	27-50-00-01	-308	02	6722630-1	57-20-01-13	-081	02
6722543-16	27-50-00-01	-383	01	6722630-1	57-20-01-13	-087	01
6722543-16	27-50-00-01	-458	01	6722630-1	57-20-01-14	-007	02

© Cessna Aircraft Company

PART NUMBER	CH SEC SUBJ FIG	ITEM	REQ	PART NUMBER	CH SEC SUBJ FIG	ITEM	REQ
6722630-1	57-20-01-14	-084	01	6722630-2	57-20-01-17	-006	01
6722630-1	57-20-01-14	-089	02	6722630-2	57-20-01-17	-007	01
6722630-1	57-20-01-15	-009	01	6722630-2	57-20-01-17	-025	01
6722630-1	57-20-01-15	-010	01	6722630-3	57-20-01-15	-020	01
6722630-1	57-20-01-15	-016	01	6722630-5	57-20-01-02	-010	05
6722630-1	57-20-01-16	-005	04	6722630-5	57-20-01-02	-022	02
6722630-1	57-20-01-16	-008	02	6722630-5	57-20-01-02	-098	01
6722630-1	57-20-01-17	-005	01	6722630-5	57-20-01-02	-118	01
6722630-1	57-20-01-17	-008	01	6722630-6	57-20-01-02	-011	05
6722630-1	57-20-01-17	-026	01	6722630-6	57-20-01-02	-021	02
6722630-10	57-20-01-02	-016	01	6722630-6	57-20-01-02	-099	01
6722630-10	57-20-01-02	-027	02	6722630-6	57-20-01-02	-117	01
6722630-10	57-20-01-02	-094	01	6722630-9	57-20-01-02	-015	01
6722630-10	57-20-01-02	-104	02	6722630-9	57-20-01-02	-028	02
6722630-10	57-20-01-02	-109	02	6722630-9	57-20-01-02	-093	01
6722630-11	57-20-01-02	-009	AR	6722630-9	57-20-01-02	-103	02
6722630-11	57-20-01-02	-020	AR	6722630-9	57-20-01-02	-110	02
6722630-11	57-20-01-02	-026	AR	6722633-10	57-20-01-05	-005	01
6722630-11	57-20-01-02	-097	AR	6722633-11	57-20-01-05	-006	01
6722630-11	57-20-01-02	-102	AR	6722633-12	57-20-01-05	-007	01
6722630-11	57-20-01-02	-108	AR	6722633-9	57-20-00-04	-010	01
6722630-11	57-20-01-02	-116	AR	6722635-11	57-20-00-07	-020	01
6722630-12	57-20-01-05	-017	02	6722635-12	57-20-00-07	-019	01
6722630-2	57-20-01-05	-012	05	6722644-10	57-20-01-16	-015	01
6722630-2	57-20-01-06	-018	10	6722644-12	57-20-01-16	-016	01
6722630-2	57-20-01-06	-085	04	6722644-5	57-20-00-04	-082	01
6722630-2	57-20-01-06	-093	03	6722644-6	57-20-00-07	-055	01
6722630-2	57-20-01-07	-005	03	6722646-5	57-20-01-17	-031	01
6722630-2	57-20-01-07	-012	05	6722646-5	57-20-01-17	-034	01
6722630-2	57-20-01-07	-085	04	6722646-6	57-20-01-17	-030	01
6722630-2	57-20-01-07	-092	03	6722646-6	57-20-01-17	-035	01
6722630-2	57-20-01-08	-006	03	6722648-10	57-20-01-18	-032	01
6722630-2	57-20-01-08	-012	06	6722648-11	57-20-01-18	-028	04
6722630-2	57-20-01-08	-084	04	6722648-5	57-20-01-18	-029	01
6722630-2	57-20-01-08	-091	03	6722648-6	57-20-01-18	-030	01
6722630-2	57-20-01-09	-007	05	6722648-7	57-20-00-07	-088	02
6722630-2	57-20-01-09	-013	04	6722648-8	57-20-00-07	-089	01
6722630-2	57-20-01-09	-086	03	6722648-9	57-20-01-18	-031	01
6722630-2	57-20-01-09	-093	02	6722665-19	57-20-00-07	-018	01
6722630-2	57-20-01-10	-016	03	6722665-29	57-20-00-05	-014	01
6722630-2	57-20-01-10	-021	04	6722665-30	57-20-00-05	-015	01
6722630-2	57-20-01-10	-083	03	6722679-6	57-20-00-07	-090	02
6722630-2	57-20-01-10	-088	02	6722687-10	57-20-05-01	-098	01
6722630-2	57-20-01-11	-016	04	6722687-11	57-20-05-01	-103	01
6722630-2	57-20-01-11	-023	03	6722687-12	57-20-05-01	-104	01
6722630-2	57-20-01-11	-084	02	6722687-13	57-20-05-01	-105	02
6722630-2	57-20-01-11	-091	02	6722687-5	57-20-05-01	-099	02
6722630-2	57-20-01-12	-013	08	6722687-9	57-20-05-01	-097	01
6722630-2	57-20-01-12	-084	02	6722691-37	57-20-05-01	-001	01
6722630-2	57-20-01-12	-088	01	6722691-38	57-20-05-01	-002	01
6722630-2	57-20-01-13	-019	01	6722691-39	57-20-05-01	-014	01
6722630-2	57-20-01-13	-023	04	6722691-40	57-20-05-01	-015	01
6722630-2	57-20-01-13	-082	02	6722691-41	57-20-05-01	-022	01
6722630-2	57-20-01-13	-086	01	6722691-42	57-20-05-01	-023	01
6722630-2	57-20-01-14	-012	04	6722691-43	57-20-05-01	-031	01
6722630-2	57-20-01-14	-083	01	6722691-44	57-20-05-01	-032	01
6722630-2	57-20-01-14	-090	02	6722691-45	57-20-05-01	-075	01
6722630-2	57-20-01-15	-011	01	6722691-46	57-20-05-01	-076	01
6722630-2	57-20-01-15	-012	01	6722691-47	57-20-05-01	-089	01
6722630-2	57-20-01-15	-017	01	6722691-48	57-20-05-01	-090	01
6722630-2	57-20-01-16	-006	04	6722721-11	57-20-01-01	-008	01
6722630-2	57-20-01-16	-007	02	6722721-12	57-20-01-01	-009	01

© Cessna Aircraft Company

PART NUMBER	CH SEC SUBJ FIG	ITEM	REQ	PART NUMBER	CH SEC SUBJ FIG	ITEM	REQ
6722721-13	57-20-01-01	-013	02	6722729-9	57-20-00-07	-036	01
6722721-14	57-20-01-01	-014	02	6722730-1	57-20-01-12	-001	02
6722721-15	57-20-01-01	-001	01	6722730-2	57-20-01-12	-002	01
6722721-16	57-20-01-01	-002	01	6722730-3	57-20-01-12	-003	01
6722721-17	57-20-01-01	-018	02	6722730-4	57-20-01-12	-004	01
6722721-18	57-20-01-01	-019	02	6722730-5	57-20-01-12	-005	01
6722721-19	57-20-01-01	-023	01	6722730-6	57-20-00-07	-041	01
6722721-20	57-20-01-01	-024	01	6722730-7	57-20-00-04	-037	01
6722721-21	57-20-01-01	-028	04	6722730-8	57-20-01-12	-006	01
6722721-22	57-20-01-01	-029	04	6722731-1	57-20-01-13	-001	01
6722722-3	57-20-00-07	-011	01	6722731-11	57-20-01-13	-006	01
6722722-4	57-20-00-07	-012	01	6722731-12	57-20-00-04	-043	01
6722722-7	57-20-01-02	-001	01	6722731-13	57-20-01-13	-029	01
6722722-8	57-20-01-02	-002	01	6722731-14	57-20-01-13	-030	01
6722723-1	57-20-01-05	-001	02	6722731-15	57-20-01-13	-028	02
6722723-2	57-20-01-05	-002	01	6722731-16	57-20-01-13	-015	02
6722723-3	57-20-00-07	-013	01	6722731-17	57-20-01-13	-007	01
6722723-4	57-20-01-05	-004	01	6722731-18	57-20-01-13	-008	01
6722723-5	57-20-01-05	-003	01	6722731-19	57-20-01-13	-009	01
6722724-1	57-20-01-06	-001	02	6722731-2	57-20-01-13	-002	01
6722724-2	57-20-01-06	-002	01	6722731-20	57-20-01-13	-010	01
6722724-3	57-20-00-07	-016	01	6722731-3	57-20-01-13	-003	01
6722724-5	57-20-01-06	-003	01	6722731-4	57-20-01-13	-004	01
6722724-6	57-20-01-06	-004	01	6722731-5	57-20-00-07	-043	01
6722724-7	57-20-01-06	-005	01	6722731-6	57-20-00-07	-044	01
6722724-8	57-20-01-06	-006	01	6722731-7	57-20-01-13	-005	01
6722724-9	57-20-00-04	-012	01	6722731-8	57-20-01-13	-014	02
6722725-3	57-20-01-07	-001	01	6722732-1	57-20-01-14	-001	02
6722725-4	57-20-01-07	-002	01	6722732-10	57-20-01-14	-006	01
6722726-4	57-20-00-07	-024	01	6722732-2	57-20-01-14	-003	01
6722726-5	57-20-01-08	-001	01	6722732-3	57-20-01-14	-005	01
6722726-6	57-20-01-08	-002	01	6722732-4	57-20-01-14	-020	02
6722727-3	57-20-00-07	-028	01	6722732-5	57-20-01-14	-016	02
6722727-7	57-20-01-09	-001	01	6722732-6	57-20-01-14	-004	01
6722727-8	57-20-01-09	-002	01	6722732-7	57-20-01-14	-002	01
6722728-1	57-20-01-10	-001	01	6722732-8	57-20-00-04	-075	01
6722728-11	57-20-01-10	-012	02	6722732-9	57-20-00-07	-045	01
6722728-12	57-20-01-10	-011	02	6722733-10	57-20-01-15	-002	01
6722728-13	57-20-01-10	-008	01	6722733-11	57-20-01-15	-026	01
6722728-2	57-20-01-10	-002	01	6722733-12	57-20-01-15	-027	01
6722728-3	57-20-01-10	-003	01	6722733-13	57-20-01-14	-096	02
6722728-4	57-20-01-10	-004	01	6722733-13	57-20-01-15	-025	02
6722728-5	57-20-00-04	-030	01	6722733-3	57-20-00-07	-049	01
6722728-6	57-20-00-07	-032	01	6722733-4	57-20-00-07	-050	01
6722728-7	57-20-01-10	-005	01	6722733-5	57-20-01-15	-021	01
6722728-8	57-20-01-10	-006	01	6722733-6	57-20-01-15	-022	01
6722728-9	57-20-01-10	-007	01	6722733-7	57-20-01-15	-030	02
6722729-1	57-20-01-11	-001	01	6722733-9	57-20-01-15	-001	01
6722729-10	57-20-00-07	-037	01	6722734-1	57-20-01-16	-001	01
6722729-11	57-20-01-11	-009	01	6722734-2	57-20-01-16	-002	01
6722729-12	57-20-00-04	-034	01	6722734-7	57-20-01-11	-097	01
6722729-13	57-20-01-11	-010	01	6722734-7	57-20-01-16	-011	01
6722729-14	57-20-01-11	-011	02	6722734-8	57-20-01-11	-096	01
6722729-15	57-20-01-11	-012	02	6722734-8	57-20-01-16	-012	01
6722729-15	57-20-01-17	-020	01	6722735-7	57-20-01-17	-019	01
6722729-2	57-20-01-11	-002	01	6722735-8	57-20-01-12	-093	02
6722729-3	57-20-01-11	-003	01	6722735-8	57-20-01-15	-034	01
6722729-4	57-20-01-11	-004	01	6722736-1	57-20-01-17	-021	01
6722729-5	57-20-01-11	-005	01	6722736-2	57-20-01-17	-022	01
6722729-6	57-20-01-11	-006	01	6722736-3	57-20-00-07	-079	01
6722729-7	57-20-01-11	-007	01	6722736-4	57-20-00-04	-088	01
6722729-8	57-20-01-11	-008	01	6722736-5	57-20-00-07	-080	01

© Cessna Aircraft Company

PART NUMBER	CH SEC SUBJ FIG	ITEM	REQ
6722737-10	57-20-01-18	-011	01
6722737-12	57-20-00-04	-092	01
6722737-13	57-20-01-18	-015	04
6722737-14	57-20-00-07	-087	01
6722737-15	57-20-01-18	-001	01
6722737-16	57-20-01-18	-002	01
6722737-5	57-20-00-07	-085	01
6722737-6	57-20-00-07	-086	01
6722737-7	57-20-01-18	-013	01
6722737-8	57-20-01-18	-014	01
6722737-9	57-20-01-18	-010	01
6722738-11	57-20-01-18	-020	01
6722738-12	57-20-01-18	-021	01
6722738-3	57-20-01-18	-025	01
6722738-4	57-20-01-18	-026	01
6722739-10	57-20-01-19	-021	01
6722739-3	57-20-01-19	-023	02
6722739-6	57-20-00-05	-045	01
6722739-8	57-20-01-19	-022	04
6722739-9	57-20-01-19	-020	01
6722741-10	57-20-00-07	-006	01
6722741-11	57-20-00-07	-007	01
6722741-21	57-20-01-01	-082	02
6722741-21	57-20-01-01	-087	02
6722741-22	57-20-01-01	-083	02
6722741-22	57-20-01-01	-088	02
6722741-25	57-20-01-01	-092	01
6722741-25	57-20-01-01	-097	01
6722741-26	57-20-01-01	-093	01
6722741-26	57-20-01-01	-098	01
6722741-29	57-20-01-01	-075	01
6722741-30	57-20-01-01	-076	01
6722741-31	57-20-01-01	-102	01
6722741-32	57-20-01-01	-103	01
6722741-33	57-20-01-01	-107	01
6722741-34	57-20-01-01	-108	01
6722742-3	57-20-01-02	-077	01
6722742-4	57-20-01-02	-078	01
6722742-6	57-20-00-07	-010	01
6722742-7	57-20-01-02	-075	01
6722742-8	57-20-01-02	-076	01
6722744-3	57-20-00-07	-015	01
6722744-5	57-20-01-06	-075	01
6722744-6	57-20-01-06	-076	01
6722745-7	57-20-01-07	-075	01
6722745-8	57-20-01-07	-076	01
6722745-9	57-20-01-07	-003	06
6722745-9	57-20-01-07	-011	10
6722745-9	57-20-01-07	-083	08
6722745-9	57-20-01-07	-091	06
6722746-1	57-20-01-08	-075	01
6722746-2	57-20-01-08	-076	01
6722746-4	57-20-00-07	-023	01
6722747-3	57-20-00-07	-029	01
6722747-5	57-20-01-09	-075	01
6722747-6	57-20-01-09	-076	01
6722748-1	57-20-01-10	-075	01
6722748-2	57-20-01-10	-076	01
6722748-3	57-20-00-07	-031	01
6722749-1	57-20-01-11	-075	01
6722749-2	57-20-01-11	-076	01
6722749-3	57-20-00-07	-038	01

PART NUMBER	CH SEC SUBJ FIG	ITEM	REQ
6722750-1	57-20-01-12	-075	01
6722750-2	57-20-01-12	-076	01
6722750-3	57-20-00-07	-040	01
6722751-3	57-20-00-07	-042	01
6722751-5	57-20-01-13	-075	01
6722751-6	57-20-01-13	-076	01
6722752-3	57-20-00-07	-046	01
6722752-4	57-20-01-14	-097	02
6722752-4	57-20-01-17	-040	01
6722752-5	57-20-01-14	-075	01
6722752-6	57-20-01-14	-076	01
6722753-3	57-20-00-07	-047	01
6722753-4	57-20-00-07	-048	01
6722753-5	57-20-01-15	-005	01
6722753-6	57-20-01-15	-006	01
6722753-7	57-20-01-15	-003	01
6722753-8	57-20-01-15	-004	01
6722754-1	57-20-01-16	-003	01
6722754-2	57-20-01-16	-004	01
6722754-3	57-20-00-07	-051	01
6722754-4	57-20-00-07	-052	01
6722755-1	57-20-01-17	-003	01
6722755-2	57-20-01-17	-004	01
6722755-3	57-20-00-07	-075	01
6722755-4	57-20-00-05	-035	02
6722755-5	57-20-01-17	-012	02
6722755-6	57-20-01-17	-015	01
6722756-1	57-20-01-17	-023	01
6722756-2	57-20-01-17	-024	01
6722756-3	57-20-00-07	-078	01
6722756-5	28-11-40-01	-091	01
6722756-5	57-20-01-17	-038	01
6722756-6	28-11-40-01	-092	01
6722756-6	57-20-01-17	-039	01
6722757-1	57-20-01-18	-003	01
6722757-2	57-20-01-18	-004	01
6722757-3	57-20-01-18	-005	02
6722757-6	57-20-00-07	-084	01
6722757-7	57-20-01-18	-007	01
6722757-8	57-20-01-18	-008	01
6722758-1	57-20-01-19	-013	01
6722758-2	57-20-01-19	-014	01
6722758-3	57-20-01-19	-015	01
6722758-4	57-20-01-19	-016	01
6722758-5	57-20-00-04	-101	01
6722758-6	57-20-01-18	-016	02
6722758-7	57-20-00-07	-095	01
6722758-8	57-20-00-07	-094	01
6722758-9	57-20-00-07	-091	01
6722758-9	57-20-00-07	-096	01
6722759-10	57-20-01-19	-002	01
6722759-4	57-20-01-19	-005	02
6722759-5	57-20-01-19	-003	01
6722759-6	57-20-01-19	-004	01
6722759-7	57-20-00-04	-100	01
6722759-8	57-20-01-19	-006	02
6722759-9	57-20-01-19	-001	01
6722765-1	57-20-01-17	-001	01
6722765-2	57-20-01-17	-002	01
6722767-1	57-20-01-01	-012	04
6722767-1	57-20-01-01	-017	04
6722767-1	57-20-01-01	-022	02

© Cessna Aircraft Company

PART NUMBER	CH SEC SUBJ FIG	ITEM	REQ	PART NUMBER	CH SEC SUBJ FIG	ITEM	REQ
6722767-1	57-20-01-01	-027	08	6724120-25	57-70-00-01	-026	01
6722767-1	57-20-01-01	-081	04	6724120-26	57-70-00-01	-027	01
6722767-1	57-20-01-01	-091	02	6724124-1	57-70-00-01	-013	01
6722767-1	57-20-01-01	-106	02	6724130-13	57-70-00-01	-089	01
6722767-2	57-20-01-01	-007	02	6724130-14	57-70-00-01	-090	01
6722767-2	57-20-01-01	-086	04	6724130-15	57-70-00-01	-075	01
6722767-2	57-20-01-01	-096	02	6724130-16	57-70-00-01	-076	01
6722767-2	57-20-01-01	-101	02	6724142-13	57-70-00-01	-005	01
6722912-1	57-50-00-01	-029	01	6724142-13	57-70-00-01	-022	01
6722912-11	57-50-00-01	-022	01	6724142-13	57-70-00-01	-030	01
6722912-12	57-50-00-01	-023	01	6724142-14	57-70-00-01	-006	01
6722912-13	57-50-00-01	-036	01	6724142-14	57-70-00-01	-021	01
6722912-14	57-50-00-01	-033	01	6724142-14	57-70-00-01	-031	01
6722912-15	57-50-00-01	-034	01	6724142-15	57-70-00-01	-010	01
6722912-19	57-50-00-01	-028	01	6724142-15	57-70-00-01	-017	01
6722912-2	57-50-00-01	-030	01	6724142-15	57-70-00-01	-035	01
6722912-21	57-50-00-01	-039	01	6724142-16	57-70-00-01	-009	01
6722912-22	57-50-00-01	-040	01	6724142-16	57-70-00-01	-018	01
6722912-27	57-50-00-01	-035	01	6724142-16	57-70-00-01	-034	01
6722925-11	57-20-00-04	-087	01	6724142-19	57-70-00-01	-087	02
6722925-5	57-20-00-07	-076	01	6724142-19	57-70-00-01	-101	02
6722925-6	57-20-00-07	-077	01	6724142-21	27-63-05-01	-011	02
6724007-3	57-60-00-02	-010	01	6724142-21	27-63-05-01	-012	04
6724007-4	57-60-00-02	-011	01	6724142-21	57-70-00-01	-025	01
6724012-1	57-60-00-01	-013	01	6724142-25	57-70-00-01	-079	01
6724012-2	57-60-00-01	-012	01	6724142-25	57-70-00-01	-084	01
6724012-3	57-60-00-01	-011	01	6724142-25	57-70-00-01	-093	01
6724013-10	57-60-00-02	-004	01	6724142-25	57-70-00-01	-098	01
6724013-9	57-60-00-02	-003	01	6724142-26	57-70-00-01	-080	01
6724020-1	57-60-00-01	-020	01	6724142-26	57-70-00-01	-083	01
6724020-2	57-60-00-01	-021	01	6724142-26	57-70-00-01	-094	01
6724020-3	57-60-00-01	-032	04	6724142-26	57-70-00-01	-097	01
6724020-4	57-60-00-01	-093	02	6724143-1	57-70-00-01	-077	01
6724021-13	57-60-00-01	-024	01	6724143-1	57-70-00-01	-091	01
6724021-14	57-60-00-01	-025	01	6724144-3	57-70-00-01	-003	01
6724021-15	57-60-00-01	-075	01	6724144-3	57-70-00-01	-015	01
6724021-16	57-60-00-01	-076	01	6724144-3	57-70-00-01	-028	01
6724021-17	57-60-00-01	-085	01	6724202-1	57-70-00-02	-010	01
6724021-18	57-60-00-01	-086	01	6724202-11	57-70-00-02	-079	01
6724021-19	57-60-00-01	-087	01	6724202-12	57-70-00-02	-080	01
6724021-20	57-60-00-01	-088	01	6724202-15	57-70-00-02	-081	01
6724021-23	57-60-00-01	-022	01	6724202-16	57-70-00-02	-082	01
6724021-24	57-60-00-01	-023	01	6724202-19	57-70-00-02	-103	01
6724051-3	57-60-00-02	-001	01	6724202-20	57-70-00-02	-104	01
6724051-4	57-60-00-02	-002	01	6724202-3	57-70-00-02	-014	01
6724056-15	57-60-00-02	-014	01	6724202-7	57-70-00-02	-020	01
6724056-16	57-60-00-02	-015	01	6724202-8	57-70-00-02	-021	01
6724056-17	57-60-00-02	-016	01	6724203-2	57-70-00-02	-012	NP
6724056-18	57-60-00-02	-017	01	6724203-4	57-70-00-02	-009	NP
6724056-19	57-60-00-02	-018	01	6724203-5	57-70-00-02	-009A	01
6724056-20	57-60-00-02	-019	01	6724203-6	57-70-00-02	-012A	01
6724056-21	57-60-00-02	-020	01	6724204-1	57-70-00-02	-093	01
6724056-22	57-60-00-02	-021	01	6724204-2	57-70-00-02	-094	01
6724056-23	57-60-00-02	-022	01	6724207-10	57-70-00-02	-100	01
6724056-24	57-60-00-02	-023	01	6724207-11	57-70-00-02	-095	01
6724056-25	57-60-00-02	-024	01	6724207-12	57-70-00-02	-096	01
6724056-26	57-60-00-02	-025	01	6724207-21	27-13-35-01	-010	01
6724056-27	57-60-00-02	-026	01	6724207-22	27-13-35-01	-011	01
6724056-28	57-60-00-02	-027	01	6724207-23	27-13-35-01	-012	01
6724120-21	57-70-00-01	-001	01	6724207-24	27-13-35-01	-013	01
6724120-22	57-70-00-01	-002	01	6724207-5	57-70-00-02	-089	01
6724120-24	57-70-00-01	-014	01	6724207-6	57-70-00-02	-090	01

© Cessna Aircraft Company

PART NUMBER	CH SEC SUBJ FIG	ITEM	REQ	PART NUMBER	CH SEC SUBJ FIG	ITEM	REQ
6724207-7	57-70-00-02	-085	01	6725142-15	57-51-00-01	-168	01
6724207-8	57-70-00-02	-086	01	6725142-16	57-51-00-01	-169	01
6724207-9	57-70-00-02	-099	01	6725142-17	57-51-00-01	-097	01
6724208-10	27-60-40-01	-016	01	6725142-18	57-51-00-01	-098	01
6724208-11	27-60-40-01	-019	01	6725142-3	57-51-00-01	-012	01
6724208-12	27-60-40-01	-020	01	6725142-4	57-51-00-01	-013	01
6724208-13	27-13-35-01	-009	01	6725142-5	57-51-00-01	-095	01
6724208-13	27-60-40-01	-010	01	6725142-6	57-51-00-01	-096	01
6724208-7	27-60-40-01	-011	01	6725143-3	57-51-00-01	-113	01
6724208-8	27-60-40-01	-012	01	6725143-4	57-51-00-01	-114	01
6724208-9	27-60-40-01	-015	01	6725144-1	57-51-00-01	-014	01
6724211-1	57-70-00-02	-001	01	6725144-2	57-51-00-01	-015	01
6724211-11	57-70-00-02	-017	01	6725144-5	27-50-00-01	-101	01
6724211-12	57-70-00-02	-016	01	6725144-6	27-50-00-01	-102	01
6724211-13	57-70-00-02	-075	01	6725400-10	57-40-10-01	-002	01
6724211-14	57-70-00-02	-076	01	6725400-9	57-40-10-01	-001	01
6724211-15	57-70-00-02	-106	01	6725440-20	57-40-10-01	-301	04
6724211-16	57-70-00-02	-107	01	6725440-21	57-40-10-01	-300	04
6724211-2	57-70-00-02	-002	01	6725440-22	57-40-10-01	-303	02
6724211-7	57-70-00-02	-007	03	6725440-23	57-40-10-01	-302	NP
6724211-8	57-70-00-02	-008	03	6725440-24	57-40-10-01	-305	02
6725001-10	27-50-00-01	-022	01	6725440-25	57-40-10-01	-304	02
6725001-13	27-50-00-01	-017	04	6725440-7	57-40-10-01	-307	16
6725001-14	27-50-00-01	-018	01	6725452-1	57-40-10-01	-084	01
6725001-18	27-50-00-01	-009	01	6725452-13	57-40-10-01	-082	01
6725001-2	27-50-00-01	-023	04	6725452-14	57-40-10-01	-083	01
6725001-2	27-50-00-01	-090	02	6725452-15	57-40-10-01	-167	01
6725001-3	27-50-00-01	-091	04	6725452-16	57-40-10-01	-168	01
6725001-3	27-50-00-01	-164	02	6725452-17	57-40-10-01	-236	01
6725001-7	27-50-00-01	-244	02	6725452-18	57-40-10-01	-237	01
6725001-8	27-50-00-01	-246	03	6725452-19	57-40-10-01	-081	01
6725001-9	27-50-00-01	-021	01	6725452-2	57-40-10-01	-085	01
6725110-7	57-51-00-01	-001	01	6725452-20	57-40-10-01	-166	01
6725110-8	57-51-00-01	-002	01	6725452-21	57-40-10-01	-235	01
6725112-13	57-51-00-01	-028	01	6725452-3	57-40-10-01	-079	01
6725112-14	57-51-00-01	-029	01	6725452-4	57-40-10-01	-080	01
6725112-15	57-51-00-01	-018	01	6725452-5	57-40-10-01	-164	01
6725112-16	57-51-00-01	-019	01	6725452-6	57-40-10-01	-165	01
6725120-5	57-51-00-01	-075	01	6725452-7	57-40-10-01	-233	01
6725120-6	57-51-00-01	-076	01	6725452-8	57-40-10-01	-234	01
6725122-13	57-51-00-01	-102	01	6725453-19	57-40-10-01	-267	01
6725122-14	57-51-00-01	-103	01	6725454-1	57-40-10-01	-024	01
6725122-15	57-51-00-01	-111	01	6725454-10	57-40-10-01	-097	01
6725122-16	57-51-00-01	-112	01	6725454-13	57-40-10-01	-158	01
6725130-7	57-51-00-01	-150	01	6725454-14	57-40-10-01	-159	01
6725130-8	57-51-00-01	-151	01	6725454-17	57-40-10-01	-179	01
6725132-15	57-51-00-01	-172	01	6725454-18	57-40-10-01	-180	01
6725132-16	57-51-00-01	-173	01	6725454-2	57-40-10-01	-025	01
6725132-17	57-51-00-01	-181	01	6725454-21	57-40-10-01	-227	01
6725132-18	57-51-00-01	-182	01	6725454-22	57-40-10-01	-228	01
6725141-17	57-51-00-01	-030	01	6725454-25	57-40-10-01	-246	01
6725141-18	57-51-00-01	-031	01	6725454-26	57-40-10-01	-247	01
6725141-19	57-51-00-01	-020	01	6725454-29	57-40-10-01	-259	01
6725141-20	57-51-00-01	-021	01	6725454-30	57-40-10-01	-260	01
6725141-21	57-51-00-01	-104	01	6725454-5	57-40-10-01	-040	01
6725141-22	57-51-00-01	-105	01	6725454-6	57-40-10-01	-041	01
6725141-23	57-51-00-01	-174	01	6725454-9	57-40-10-01	-096	01
6725141-24	57-51-00-01	-175	01	6725455-10	57-40-10-01	-087	01
6725141-25	57-51-00-01	-183	01	6725455-11	57-40-10-01	-169	01
6725141-26	57-51-00-01	-184	01	6725455-12	57-40-10-01	-170	01
6725142-13	57-51-00-01	-166	01	6725455-13	57-40-10-01	-238	01
6725142-14	57-51-00-01	-167	01	6725455-14	57-40-10-01	-239	01

© Cessna Aircraft Company

PART NUMBER	CH SEC SUBJ FIG	ITEM	REQ
6725455-9	57-40-10-01	-086	01
6725457-1	57-40-10-01	-036	01
6725457-2	57-40-10-01	-037	01
6725457-3	57-40-10-01	-150	01
6725457-4	57-40-10-01	-151	01
6725457-5	57-40-10-01	-185	01
6725457-6	57-40-10-01	-186	01
6725457-7	57-40-10-01	-254	01
6725457-8	57-40-10-01	-255	01
6725458-10	57-40-10-01	-076	01
6725458-11	57-40-10-01	-098	01
6725458-12	57-40-10-01	-099	01
6725458-13	57-40-10-01	-160	01
6725458-14	57-40-10-01	-161	01
6725458-17	57-40-10-01	-229	01
6725458-18	57-40-10-01	-230	01
6725458-19	57-40-10-01	-250	01
6725458-20	57-40-10-01	-251	01
6725458-21	57-40-10-01	-261	01
6725458-22	57-40-10-01	-262	01
6725458-31	57-40-10-01	-181	01
6725458-32	57-40-10-01	-182	01
6725458-5	57-40-10-01	-014	01
6725458-6	57-40-10-01	-015	01
6725458-7	57-40-10-01	-034	01
6725458-8	57-40-10-01	-035	01
6725458-9	57-40-10-01	-075	01
6725459-1	57-40-10-01	-012	01
6725459-2	57-40-10-01	-013	01
6725462-1	57-40-10-01	-028	01
6725462-10	57-40-10-01	-157	01
6725462-11	57-40-10-01	-162	01
6725462-12	57-40-10-01	-163	01
6725462-13	57-40-10-01	-183	01
6725462-14	57-40-10-01	-184	01
6725462-15	57-40-10-01	-189	01
6725462-16	57-40-10-01	-190	01
6725462-17	57-40-10-01	-231	01
6725462-18	57-40-10-01	-232	01
6725462-2	57-40-10-01	-029	01
6725462-21	57-40-10-01	-257	01
6725462-22	57-40-10-01	-258	01
6725462-23	57-40-10-01	-263	01
6725462-24	57-40-10-01	-264	01
6725462-25	57-40-10-01	-252	01
6725462-26	57-40-10-01	-253	01
6725462-3	57-40-10-01	-038	01
6725462-4	57-40-10-01	-039	01
6725462-5	57-40-10-01	-077	01
6725462-6	57-40-10-01	-078	01
6725462-7	57-40-10-01	-100	01
6725462-8	57-40-10-01	-101	01
6725462-9	57-40-10-01	-156	01
6725465-1	57-40-10-01	-008	01
6725465-2	57-40-10-01	-009	01
6725465-5	57-40-10-01	-006	01
6725465-6	57-40-10-01	-007	01
6725465-7	57-40-10-01	-265	01
6725465-8	57-40-10-01	-266	01
6725465-9	57-40-10-01	-256	01
6725467-10	57-40-10-01	-033	01
6725467-11	57-40-10-01	-092	01
6725467-12	57-40-10-01	-093	01
6725467-13	57-40-10-01	-171	01
6725467-14	57-40-10-01	-172	01
6725467-15	57-40-10-01	-240	01
6725467-16	57-40-10-01	-241	01
6725467-9	57-40-10-01	-032	01
6725468-1	57-40-10-01	-026	01
6725468-2	57-40-10-01	-027	01
6725468-21	57-40-10-01	-175	01
6725468-22	57-40-10-01	-176	01
6725468-23	57-40-10-01	-244	01
6725468-24	57-40-10-01	-245	01
6725468-3	57-40-10-01	-088	01
6725468-4	57-40-10-01	-089	01
6725469-10	57-40-10-01	-153	01
6725469-11	57-40-10-01	-187	01
6725469-12	57-40-10-01	-188	01
6725469-7	57-40-10-01	-030	01
6725469-8	57-40-10-01	-031	01
6725469-9	57-40-10-01	-152	01
6725470-1	57-40-10-01	-010	01
6725470-2	57-40-10-01	-011	01
6725470-3	57-40-10-01	-090	01
6725470-4	57-40-10-01	-091	01
6725470-5	57-40-10-01	-173	01
6725470-6	57-40-10-01	-174	01
6725470-7	57-40-10-01	-242	01
6725470-8	57-40-10-01	-243	01
6725471-10	57-40-10-01	-226	01
6725471-11	57-40-10-01	-248	01
6725471-12	57-40-10-01	-249	01
6725471-3	57-40-10-01	-094	01
6725471-4	57-40-10-01	-095	01
6725471-5	57-40-10-01	-154	01
6725471-6	57-40-10-01	-155	01
6725471-7	57-40-10-01	-177	01
6725471-8	57-40-10-01	-178	01
6725471-9	57-40-10-01	-225	01
6725473-1	57-40-10-01	-016	01
6725473-2	57-40-10-01	-017	01
6725474-26	57-40-10-01	-317	04
6725474-7	57-40-10-01	-315	08
6725474-8	57-40-10-01	-316	04
6725501-1	27-50-00-01	-247	01
6725501-2	27-50-00-01	-248	01
6725501-3	27-50-00-01	-245	02
6726102-15	28-20-00-03	-161	01
6726102-16	28-20-00-03	-162	01
6726102-21	28-20-00-03	-166	01
6726102-22	28-20-00-03	-167	01
6726102-23	28-20-00-03	-171	01
6726102-24	28-20-00-03	-172	01
6726102-27	28-20-00-03	-093	01
6726102-39	28-21-00-02	-097	02
6726102-40	28-20-00-03	-014	01
6726102-41	28-20-00-03	-157	01
6726102-42	28-20-00-03	-158	01
6726102-44	28-20-00-03	-079	01
6726102-45	28-20-00-03	-078	01
6726102-46	28-20-00-03	-151	01
6726102-47	28-20-00-03	-150	01
6726102-48	28-20-00-03	-009	01

© Cessna Aircraft Company

PART NUMBER	CH SEC SUBJ FIG	ITEM	REQ	PART NUMBER	CH SEC SUBJ FIG	ITEM	REQ
6726102-49	28-20-00-03	-168	01	6726110-1	57-10-02-01	-555	02
6726102-50	28-20-00-03	-169	01	6726112-5	28-20-00-03	-255	01
6726102-51	28-20-00-03	-173	01	6726112-6	28-20-00-03	-256	01
6726102-52	28-20-00-03	-174	01	6726113-12	28-20-70-01	-001	02
6726102-57	28-21-00-02	-104	01	6726113-19	28-20-70-01	-004	02
6726102-58	28-21-00-02	-105	01	6726113-20	28-20-70-01	-005	01
6726102-59	28-20-00-03	-016	02	6726113-44	28-20-70-01	-013	04
6726102-60	28-20-00-03	-017	02	6726113-45	28-20-70-01	-003	02
6726102-62	28-20-00-03	-163	01	6726113-46	28-20-70-01	-002	04
6726102-7	28-20-00-03	-075	01	6726113-47	28-20-70-01	-008	01
6726104-17	28-20-00-03	-225	01	6726113-48	28-20-70-01	-009	01
6726104-18	28-20-00-03	-226	01	6726115-6	28-20-05-01	-016	01
6726104-31	28-20-05-01	-021	02	6726115-7	28-20-05-01	-020	12
6726104-32	28-20-05-01	-022	01	6726115-9	28-20-05-01	-017	01
6726104-34	28-20-00-03	-236	01	6726116-2	28-20-30-01	-025	02
6726104-35	28-20-00-03	-238	01	6726117-1	53-42-03-01	-075	01
6726104-39	28-20-00-03	-235	01	6726117-2	53-42-03-01	-076	01
6726104-4	28-20-00-03	-241	01	6726117-3	28-11-30-01	-033	02
6726104-51	28-20-00-03	-231	01	6726118-12	28-11-30-01	-028	01
6726104-52	28-20-00-03	-232	01	6726118-13	28-11-30-01	-027	01
6726104-55	28-11-40-01	-005	04	6726118-2	28-11-30-01	-003	02
6726104-56	28-11-40-01	-009	04	6726118-3	28-11-30-01	-013	01
6726104-61	28-20-00-03	-243	02	6726118-4	28-11-30-01	-014	01
6726104-63	28-20-00-03	-260	01	6726118-5	28-20-00-01	-004	01
6726104-63	28-20-70-01	-015	02	6726118-6	28-20-00-01	-005	01
6726104-66	28-20-00-03	-240	01	6726118-9	28-20-00-01	-001	01
6726104-67	28-20-00-03	-251	01	6726119-1	53-42-03-01	-085	01
6726104-68	28-20-00-03	-252	01	6726119-1	57-10-02-01	-043	01
6726104-70	28-20-00-03	-239	01	6726119-2	53-42-03-01	-099	02
6726104-71	28-20-00-03	-253	01	6726119-4	28-20-00-01	-013	02
6726104-72	28-20-00-03	-254	01	6726119-4	57-10-02-01	-425	02
6726104-73	28-20-00-03	-246	01	6726120-10	28-20-21-01	-016	01
6726104-74	28-20-00-03	-247	01	6726120-11	28-20-21-01	-077	01
6726104-77	28-20-00-03	-228	01	6726120-12	28-20-21-01	-078	01
6726104-78	28-20-00-03	-229	01	6726120-15	28-20-21-01	-094	01
6726104-79	28-20-00-03	-257	01	6726120-16	28-20-21-01	-095	01
6726104-79	28-20-70-01	-016	02	6726120-17	28-20-21-01	-087	01
6726104-80	28-20-00-03	-245	02	6726120-18	28-20-21-01	-088	01
6726104-81	28-20-05-01	-023	01	6726120-19	28-20-21-01	-025	01
6726104-83	28-20-00-03	-025	01	6726120-20	28-20-21-01	-026	01
6726104-84	28-20-00-03	-026	01	6726120-23	28-20-21-01	-085	02
6726104-85	28-20-00-03	-023	01	6726120-24	28-20-21-01	-084	02
6726104-86	28-20-00-03	-024	01	6726120-25	28-11-27-01	-004	01
6726105-1	28-20-00-03	-086	02	6726120-26	28-11-27-01	-005	01
6726105-3	28-20-00-03	-080	02	6726120-29	28-20-21-01	-101	01
6726106-16	28-20-30-01	-083	01	6726120-3	28-20-21-01	-021	01
6726106-17	28-20-30-01	-009	01	6726120-30	28-20-21-01	-102	01
6726106-18	28-20-30-01	-010	01	6726120-31	28-20-21-01	-005	01
6726106-20	28-20-30-01	-084	01	6726120-34	28-20-21-01	-006	01
6726106-21	28-20-30-01	-085	01	6726120-4	28-20-21-01	-022	01
6726106-4	28-20-30-01	-008	02	6726120-8	28-11-27-01	-006	02
6726106-4	28-20-30-01	-082	01	6726120-9	28-20-21-01	-015	01
6726106-6	28-20-30-01	-024	02	6726150-12	28-20-60-01	-007	01
6726107-1	57-20-01-01	-111	02	6726150-13	28-20-60-01	-006	01
6726108-15	28-20-00-03	-002	01	6726150-4	28-20-65-01	-005	02
6726108-15	57-10-02-05	-167	01	6726151-1	57-20-00-06	-002	01
6726108-16	28-20-00-03	-003	01	6726151-2	57-20-00-06	-003	01
6726108-16	57-10-02-05	-168	01	6726151-3	57-20-00-05	-001	04
6726109-1	28-20-05-01	-012	01	6726152-11	28-11-20-01	-169	01
6726109-10	28-20-05-01	-005	01	6726152-15	28-11-20-01	-176	01
6726109-2	28-20-05-01	-013	01	6726152-18	28-11-20-01	-170	01
6726109-9	28-20-05-01	-015	02	6726152-19	28-11-20-01	-165	02

© Cessna Aircraft Company

PART NUMBER	CH SEC SUBJ FIG	ITEM	REQ	PART NUMBER	CH SEC SUBJ FIG	ITEM	REQ
6726152-26	28-11-20-01	-166	02	6726220-30	28-11-10-01	-013	01
6726153-1	28-11-20-01	-171	01	6726220-39	28-11-10-01	-006	01
6726154-10	28-11-20-01	-161	01	6726220-40	28-11-10-01	-007	01
6726154-11	28-11-20-01	-152	02	6726220-43	28-11-10-01	-008	01
6726154-17	28-11-20-01	-188	01	6726220-44	28-11-10-01	-009	01
6726154-18	28-11-20-01	-189	01	6726220-51	28-11-10-01	-001	01
6726154-22	28-11-20-01	-184	02	6726220-52	28-11-10-01	-002	01
6726154-23	28-11-20-01	-185	02	6726220-6	28-11-10-01	-015	06
6726154-6	28-11-20-01	-164	02	6726220-6	28-11-10-01	-075	04
6726154-9	28-11-20-01	-160	01	6726220-6	28-20-21-01	-160	08
6726155-4	28-10-10-01	-009	02	6726220-7	28-20-21-01	-150	01
6726155-5	28-10-10-01	-011	01	6726220-8	28-20-21-01	-151	01
6726155-6	28-10-10-01	-010	01	6726220-9	28-20-21-01	-161	02
6726155-7	28-10-10-01	-013	02	6726221-1	57-20-01-18	-012	02
6726157-1	28-11-20-01	-190	02	6726222-1	28-11-20-01	-027	02
6726201-10	57-00-05-01	-152	01	6726222-2	28-11-20-01	-028	02
6726201-11	57-00-05-01	-153	01	6726222-3	28-11-20-01	-025	02
6726202-11	28-11-10-01	-172	02	6726222-4	28-11-20-01	-026	02
6726202-12	28-11-10-01	-158	02	6726223-1	28-11-20-01	-011	01
6726202-13	28-11-10-01	-167	02	6726223-2	28-11-20-01	-012	01
6726202-15	28-11-10-01	-162	01	6726223-3	28-11-20-01	-032	02
6726202-5	28-11-10-01	-150	02	6726224-1	28-11-20-01	-093	02
6726203-1	57-20-01-18	-009	02	6726224-2	28-11-20-01	-094	02
6726203-7	57-20-01-18	-023	01	6726225-1	28-11-20-01	-101	01
6726203-8	57-20-01-18	-024	01	6726225-2	28-11-20-01	-102	01
6726204-2	57-20-01-18	-027	01	6726301-1	28-21-00-02	-150	01
6726204-7	57-20-01-18	-006	02	6726302-1	57-10-02-04	-023	02
6726205-3	57-20-01-18	-022	01	6726303-1	28-21-00-02	-160	01
6726208-3	28-11-10-01	-160	01	6726303-4	28-21-00-03	-098	01
6726208-4	28-11-10-01	-161	01	6726303-5	28-21-00-03	-097	01
6726213-15	28-11-20-01	-079	02	6726305-1	28-21-00-02	-155	01
6726213-16	28-11-20-01	-006	02	6726306-1	57-20-01-01	-032	01
6726213-17	28-11-20-01	-075	01	6726306-2	28-21-00-02	-234	01
6726213-18	28-11-20-01	-076	01	6726306-3	28-21-00-02	-245	01
6726213-19	28-11-20-01	-019	01	6726307-10	28-21-00-03	-184	01
6726213-20	28-11-20-01	-020	01	6726307-9	28-21-00-03	-183	01
6726213-21	28-11-20-01	-002	01	6726308-3	28-21-00-02	-080	01
6726213-22	28-11-20-01	-003	01	6726310-5	57-20-01-01	-033	01
6726213-25	28-11-20-01	-080	02	6726310-6	57-20-01-01	-034	01
6726213-29	28-11-20-01	-089	02	6726312-4	28-21-00-01	-075	01
6726213-3	28-11-20-01	-007	01	6726312-5	57-10-02-01	-044	01
6726213-31	28-11-20-01	-097	02	6726313-1	28-21-00-02	-093	02
6726213-32	28-11-20-01	-095	02	6726313-3	28-21-00-02	-103	02
6726213-33	28-11-20-01	-096	02	6726313-4	28-20-00-03	-250	02
6726213-34	28-11-20-01	-086	02	6726314-12	28-21-00-02	-315	01
6726213-35	28-11-20-01	-087	01	6726314-14	28-21-00-02	-275	01
6726213-36	28-11-20-01	-088	01	6726314-3	28-21-00-02	-192	01
6726213-4	28-11-20-01	-008	01	6726314-3	28-21-00-02	-230	01
6726216-1	28-20-21-01	-011	01	6726314-4	28-21-00-02	-193	01
6726216-2	28-20-21-01	-012	01	6726314-4	28-21-00-02	-342	01
6726217-1	28-20-21-01	-002	02	6726314-5	28-21-00-03	-029	01
6726217-2	28-20-20-01	-014	01	6726314-6	28-21-00-03	-030	01
6726218-3	28-20-20-01	-006	02	6726314-7	28-21-00-02	-186	01
6726218-4	28-20-20-01	-005	02	6726314-8	28-21-00-02	-187	01
6726219-1	28-11-10-01	-020	AR	6726315-1	52-70-60-01	-003	01
6726219-1	28-11-10-01	-085	AR	6726315-2	52-70-60-01	-004	01
6726220-11	28-11-10-01	-014	02	6726321-1	53-43-00-01	-014	01
6726220-12	28-11-10-01	-076	02	6726321-10	53-43-00-01	-042	01
6726220-13	28-11-10-01	-079	02	6726321-11	53-43-00-01	-041	01
6726220-14	28-11-10-01	-080	02	6726321-12	53-43-00-01	-039	01
6726220-19	28-20-21-01	-154	02	6726321-13	53-43-00-01	-034	01
6726220-29	28-11-10-01	-012	01	6726321-14	53-43-00-01	-040	01

© Cessna Aircraft Company

PART NUMBER	CH SEC SUBJ FIG	ITEM	REQ	PART NUMBER	CH SEC SUBJ FIG	ITEM	REQ
6726321-15	53-43-00-01	-013	01	6726330-128	28-21-00-02	-200	01
6726321-17	53-43-00-01	-024	01	6726330-129	28-21-00-02	-202	01
6726321-18	53-43-00-01	-004	01	6726330-13	28-21-00-03	-154	01
6726321-19	53-43-00-01	-081	01	6726330-131	28-21-00-02	-252	01
6726321-2	53-43-00-01	-015	01	6726330-132	28-21-00-02	-253	01
6726321-22	52-40-07-01	-008	01	6726330-134	28-21-00-02	-087	01
6726321-22	53-43-00-01	-023	01	6726330-135	28-21-00-02	-263	01
6726321-23	53-43-00-01	-005	01	6726330-136	28-21-00-02	-255	01
6726321-24	53-43-00-01	-025	01	6726330-137	28-21-00-02	-247	01
6726321-25	53-43-00-01	-086	01	6726330-138	28-21-00-02	-003	01
6726321-3	53-43-00-01	-008	01	6726330-139	28-21-00-02	-205	01
6726321-32	52-40-07-01	-009	01	6726330-14	28-21-00-03	-155	01
6726321-32	53-43-00-01	-021	01	6726330-140	28-21-00-02	-206	01
6726321-33	52-40-07-01	-010	01	6726330-141	28-21-00-02	-084	01
6726321-33	53-43-00-01	-019	01	6726330-142	28-21-00-02	-086	01
6726321-34	52-40-07-01	-012	01	6726330-145	28-21-00-03	-024	01
6726321-34	53-43-00-01	-020	01	6726330-146	28-21-00-03	-025	01
6726321-35	53-43-00-01	-017	01	6726330-149	28-21-00-02	-015	01
6726321-36	53-43-00-01	-083	01	6726330-15	28-21-00-03	-158	01
6726321-37	53-43-00-01	-084	01	6726330-150	28-21-00-02	-009	01
6726321-39	53-43-00-01	-087	01	6726330-151	28-21-00-02	-198	01
6726321-4	53-43-00-01	-009	01	6726330-152	28-21-00-01	-091	01
6726321-40	53-43-00-01	-088	01	6726330-16	28-21-00-03	-159	01
6726321-41	53-43-00-01	-089	01	6726330-17	28-21-00-03	-162	01
6726321-42	53-43-00-01	-075	01	6726330-18	28-21-00-03	-163	01
6726321-43	53-43-00-01	-091	01	6726330-19	28-21-00-03	-172	01
6726321-45	53-43-00-01	-090	01	6726330-20	28-21-00-03	-173	01
6726321-47	53-43-00-01	-078	01	6726330-27	28-21-00-03	-170	01
6726321-49	53-43-00-01	-079	01	6726330-28	28-21-00-03	-171	01
6726321-5	53-43-00-01	-010	01	6726330-29	28-21-00-03	-160	01
6726321-51	53-43-00-01	-085	01	6726330-30	28-21-00-03	-161	01
6726321-53	53-43-00-01	-035	01	6726330-31	28-21-00-03	-156	01
6726321-55	52-40-07-01	-004	01	6726330-32	28-21-00-03	-157	01
6726321-59	52-40-07-01	-007	02	6726330-39	28-21-00-03	-152	01
6726321-6	53-43-00-01	-011	01	6726330-40	28-21-00-03	-153	01
6726321-61	52-40-07-01	-001	01	6726330-41	28-21-00-03	-044	04
6726321-62	53-43-00-01	-016	01	6726330-42	28-21-00-03	-096	02
6726321-64	53-43-00-01	-001	01	6726330-45	28-21-00-02	-203	01
6726321-7	53-43-00-01	-002	01	6726330-46	28-21-00-02	-204	02
6726321-8	53-43-00-01	-003	01	6726330-47	28-21-00-02	-201	01
6726321-9	53-43-00-01	-012	04	6726330-5	28-21-00-03	-015	01
6726321-9	53-43-00-01	-082	01	6726330-51	28-21-00-02	-257	01
6726322-1	28-21-00-01	-033	01	6726330-52	28-21-00-02	-258	01
6726330-10	28-21-00-03	-082	01	6726330-54	28-21-00-02	-254	01
6726330-103	28-21-00-02	-225	01	6726330-55	28-21-00-03	-115	01
6726330-104	28-21-00-01	-014	01	6726330-56	28-21-00-03	-116	01
6726330-107	28-21-00-01	-017	01	6726330-57	28-21-00-03	-094	02
6726330-108	28-21-00-01	-012	01	6726330-59	28-21-00-02	-320	01
6726330-11	28-21-00-03	-109	01	6726330-6	28-21-00-03	-016	01
6726330-110	28-21-00-01	-013	01	6726330-61	28-21-00-02	-327	01
6726330-111	28-21-00-01	-016	01	6726330-62	28-21-00-02	-328	01
6726330-113	28-21-00-02	-246	01	6726330-67	28-21-00-03	-121	01
6726330-116	28-21-00-01	-018	01	6726330-68	28-21-00-03	-122	01
6726330-117	28-21-00-03	-178	01	6726330-69	28-21-00-02	-001	02
6726330-118	28-21-00-03	-179	01	6726330-7	28-21-00-03	-038	01
6726330-119	28-21-00-03	-174	01	6726330-71	28-21-00-03	-075	01
6726330-12	28-21-00-03	-110	01	6726330-72	28-21-00-03	-076	01
6726330-120	28-21-00-03	-175	01	6726330-73	28-21-00-03	-032	01
6726330-123	28-21-00-02	-276	01	6726330-74	28-21-00-03	-033	01
6726330-125	28-21-00-02	-233	01	6726330-77	28-21-00-03	-005	01
6726330-126	28-21-00-02	-309	01	6726330-78	28-21-00-03	-006	01
6726330-127	28-21-00-02	-310	01	6726330-8	28-21-00-03	-039	01

© Cessna Aircraft Company

PART NUMBER	CH SEC SUBJ FIG	ITEM	REQ
6726330-89	28-21-00-02	-199	01
6726330-9	28-21-00-03	-081	01
6726330-91	28-21-00-02	-334	01
6726330-92	28-21-00-02	-339	01
6726330-94	28-21-00-02	-321	01
6726332-1	28-21-00-02	-303	01
6726400-76	57-10-02-04	-076	01
6726400-77	57-10-02-04	-077	01
6726400-79	57-10-02-04	-078	01
6726400-80	28-20-00-03	-249	02
6727000-10	57-12-00-01	-002	02
6727000-11	57-12-00-01	-004	02
6727000-12	32-10-30-01	-002	01
6727000-13	32-10-30-01	-003	01
6727000-17	32-10-30-01	-075	02
6727000-3	32-10-30-01	-007	01
6727000-5	32-10-30-01	-083	02
6727000-7	57-12-00-01	-003	02
6727000-8	57-12-00-01	-001	02
6727001-5	52-80-00-01	-005	01
6727002-13	52-80-00-01	-020	01
6727002-14	52-80-00-01	-021	01
6727003-3	52-80-00-01	-024	01
6727003-4	52-80-00-01	-025	01
6727003-5	52-80-00-01	-003	01
6727003-6	52-80-00-01	-004	01
6727004-1	29-10-00-10	-031	01
6727004-1	29-10-00-10	-160	01
6727004-3	27-80-00-01	-098	07
6727004-3	27-80-00-02	-023	06
6727004-3	27-80-00-02	-097	08
6727004-3	27-80-00-02	-185	06
6727004-3	27-80-00-03	-014	06
6727004-3	29-10-00-07	-015	06
6727004-3	29-10-00-07	-173	03
6727004-3	29-10-00-12	-035	04
6727004-3	29-10-00-12	-083	08
6727004-3	29-10-00-12	-150	08
6727004-3	29-10-00-12	-234	04
6727004-3	29-10-00-12	-307	06
6727004-3	32-30-00-03	-083	01
6727004-3	32-33-00-01	-175	01
6727004-3	32-43-00-02	-202	02
6727004-3	32-49-00-02	-027	01
6727004-3	32-49-00-02	-084	02
6727004-5	29-10-00-12	-030	02
6727005-1	29-10-00-09	-085	03
6727005-1	32-30-00-02	-027	03
6727005-3	29-10-00-09	-100	03
6727005-3	32-49-00-02	-094	03
6727006-11	52-80-00-01	-028	01
6727006-3	52-80-00-01	-012	01
6727006-4	52-80-00-01	-013	01
6727006-5	52-80-00-01	-016	01
6727006-6	52-80-00-01	-017	01
6727008-3	52-80-00-01	-006	01
6727008-4	52-80-00-01	-007	01
6727010-1	52-80-00-01	-029	01
6727010-2	52-80-00-01	-030	01
6727010-5	52-80-00-01	-031	01
6727010-6	52-80-00-01	-032	01
6727011-1	52-80-00-01	-001	01

PART NUMBER	CH SEC SUBJ FIG	ITEM	REQ
6727011-2	52-80-00-01	-002	01
6727405-7	11-N-27-01	-002	01
6727405-7	11-N-27-02	-001	02
6727504-10	32-31-25-01	-002	NP
6727504-9	32-31-05-01	-001	NP
6727504-9	32-31-25-01	-001	NP
6727701-10	29-10-00-09	-019	01
6727701-12	29-10-00-09	-027	01
6727701-3	29-10-00-09	-001	01
6727701-9	29-10-00-09	-009	01
6727710-20	32-43-00-02	-153	01
6727710-21	32-43-00-02	-152	01
6727710-31	32-43-00-02	-174	01
6727710-32	32-43-00-02	-175	01
6727710-33	32-43-00-02	-181	01
6727710-34	32-43-00-02	-182	01
6727710-35	32-49-00-03	-003	01
6727710-36	32-49-00-03	-004	01
6727710-37	32-49-00-03	-019	01
6727710-41	32-49-00-03	-020	01
6727710-44	32-49-00-03	-002	01
6727710-51	32-43-00-02	-158	01
6727710-52	32-43-00-02	-159	01
6727710-53	32-43-00-02	-176	01
6727710-56	32-43-00-02	-199	02
6727710-63	32-43-00-02	-177	01
6727710-64	32-43-00-02	-163	01
6727710-66	32-47-00-01	-019	01
6727710-67	32-47-00-01	-016	01
6727710-68	32-47-00-01	-013	01
6727710-69	32-47-00-01	-022	NP
6727710-7	32-49-00-03	-012	01
6727711-11	32-47-00-01	-008	01
6727711-12	32-47-00-01	-009	01
6727711-13	32-43-00-02	-164	01
6727711-14	32-49-00-03	-011	01
6727711-16	32-47-00-01	-030	01
6727711-17	32-43-00-02	-187	01
6727711-18	32-43-00-02	-186	01
6727711-2	32-43-00-02	-179	01
6727711-3	32-43-00-02	-172	01
6727711-4	32-43-00-02	-173	01
6727711-5	32-43-00-02	-178	01
6727711-6	32-43-00-02	-166	01
6727711-8	32-43-00-02	-180	01
6727720-100	29-10-00-12	-312	01
6727720-101	29-10-00-12	-313	01
6727720-102	29-10-00-12	-314	01
6727720-105	29-10-00-12	-020	01
6727720-106	29-10-00-12	-023	01
6727720-107	29-10-00-12	-024	01
6727720-108	29-10-00-12	-025	01
6727720-109	29-10-00-12	-019	01
6727720-11	29-10-00-12	-011	01
6727720-111	29-10-00-12	-021	01
6727720-112	29-10-00-12	-026	01
6727720-117	29-10-00-12	-260	01
6727720-118	29-10-00-12	-261	01
6727720-119	29-10-00-12	-262	01
6727720-12	29-10-00-12	-012	01
6727720-120	29-10-00-12	-263	01
6727720-122	29-10-00-12	-022	01

© Cessna Aircraft Company

PART NUMBER	CH SEC SUBJ FIG	ITEM	REQ	PART NUMBER	CH SEC SUBJ FIG	ITEM	REQ
6727720-123	29-10-00-12	-300	01	6727730-103	27-80-00-03	-019	01
6727720-124	29-10-00-12	-301	01	6727730-104	27-80-00-03	-020	01
6727720-125	29-10-00-12	-302	01	6727730-105	27-80-00-03	-084	01
6727720-126	29-10-00-12	-303	01	6727730-106	27-80-00-03	-085	01
6727720-127	29-10-00-12	-315	01	6727730-107	27-80-00-03	-086	01
6727720-128	29-10-00-12	-316	01	6727730-108	27-80-00-03	-087	01
6727720-129	29-10-00-12	-317	01	6727730-11	27-80-00-02	-013	01
6727720-13	29-10-00-12	-013	01	6727730-12	27-80-00-02	-014	01
6727720-130	29-10-00-12	-318	01	6727730-13	27-80-00-02	-015	01
6727720-131	29-10-00-12	-248	01	6727730-14	27-80-00-02	-016	01
6727720-132	29-10-00-12	-249	01	6727730-15	27-80-00-02	-017	01
6727720-133	29-10-00-12	-246	01	6727730-16	27-80-00-02	-018	01
6727720-134	29-10-00-12	-247	01	6727730-17	27-80-00-02	-019	01
6727720-14	29-10-00-12	-014	01	6727730-18	27-80-00-02	-020	01
6727720-15	29-10-00-12	-075	01	6727730-19	27-80-00-02	-078	01
6727720-16	29-10-00-12	-076	01	6727730-20	27-80-00-02	-079	01
6727720-19	29-10-00-12	-077	01	6727730-21	27-80-00-02	-080	01
6727720-20	29-10-00-12	-078	01	6727730-22	27-80-00-02	-081	01
6727720-23	29-10-00-12	-079	01	6727730-23	27-80-00-02	-082	01
6727720-24	29-10-00-12	-080	01	6727730-24	27-80-00-02	-083	01
6727720-25	29-10-00-12	-081	01	6727730-25	27-80-00-02	-084	01
6727720-26	29-10-00-12	-082	01	6727730-26	27-80-00-02	-085	01
6727720-29	29-10-00-12	-093	01	6727730-27	27-80-00-02	-087	01
6727720-30	29-10-00-12	-094	01	6727730-28	27-80-00-02	-088	01
6727720-31	29-10-00-12	-095	01	6727730-29	27-80-00-02	-089	01
6727720-32	29-10-00-12	-096	01	6727730-3	27-80-00-02	-004	01
6727720-35	29-10-00-12	-097	01	6727730-30	27-80-00-02	-090	01
6727720-36	29-10-00-12	-098	01	6727730-31	27-80-00-02	-091	01
6727720-37	29-10-00-12	-099	01	6727730-32	27-80-00-02	-092	01
6727720-38	29-10-00-12	-100	01	6727730-33	27-80-00-02	-093	01
6727720-41	29-10-00-12	-107	01	6727730-34	27-80-00-02	-094	01
6727720-42	29-10-00-12	-108	01	6727730-35	27-80-00-02	-165	01
6727720-43	29-10-00-12	-109	01	6727730-36	27-80-00-02	-166	01
6727720-44	29-10-00-12	-110	01	6727730-37	27-80-00-02	-167	01
6727720-47	29-10-00-12	-103	01	6727730-38	27-80-00-02	-168	01
6727720-48	29-10-00-12	-104	01	6727730-39	27-80-00-02	-169	01
6727720-49	29-10-00-12	-105	01	6727730-4	27-80-00-02	-005	01
6727720-5	29-10-00-12	-015	01	6727730-40	27-80-00-02	-170	01
6727720-50	29-10-00-12	-106	01	6727730-41	27-80-00-02	-171	01
6727720-55	29-10-00-12	-155	01	6727730-42	27-80-00-02	-172	01
6727720-56	29-10-00-12	-156	01	6727730-43	27-80-00-02	-154	01
6727720-57	29-10-00-12	-157	01	6727730-44	27-80-00-02	-155	01
6727720-58	29-10-00-12	-158	01	6727730-45	27-80-00-02	-152	01
6727720-59	29-10-00-12	-227	01	6727730-46	27-80-00-02	-153	01
6727720-6	29-10-00-12	-016	01	6727730-47	27-80-00-02	-175	01
6727720-60	29-10-00-12	-228	01	6727730-48	27-80-00-02	-176	01
6727720-61	29-10-00-12	-225	01	6727730-49	27-80-00-02	-179	01
6727720-62	29-10-00-12	-226	01	6727730-5	27-80-00-02	-006	01
6727720-65	29-10-00-12	-165	01	6727730-50	27-80-00-02	-180	01
6727720-66	29-10-00-12	-166	01	6727730-51	27-80-00-02	-188	01
6727720-67	29-10-00-12	-167	01	6727730-52	27-80-00-02	-189	01
6727720-68	29-10-00-12	-168	01	6727730-53	27-80-00-02	-186	01
6727720-69	29-10-00-12	-230	01	6727730-54	27-80-00-02	-187	01
6727720-7	29-10-00-12	-017	01	6727730-57	27-80-00-03	-006	01
6727720-70	29-10-00-12	-231	01	6727730-58	27-80-00-03	-007	01
6727720-71	29-10-00-12	-232	01	6727730-6	27-80-00-02	-007	01
6727720-72	29-10-00-12	-233	01	6727730-65	27-80-00-03	-017	01
6727720-8	29-10-00-12	-018	01	6727730-66	27-80-00-03	-018	01
6727720-99	29-10-00-12	-311	01	6727730-69	27-80-00-03	-021	01
6727730-10	27-80-00-02	-011	01	6727730-7	27-80-00-02	-008	01
6727730-101	27-80-00-03	-015	01	6727730-70	27-80-00-03	-022	01
6727730-102	27-80-00-03	-016	01	6727730-79	27-80-00-02	-177	01

© Cessna Aircraft Company

PART NUMBER	CH SEC SUBJ FIG	ITEM	REQ	PART NUMBER	CH SEC SUBJ FIG	ITEM	REQ
6727730-8	27-80-00-02	-009	01	6727750-42	29-10-00-10	-046	01
6727730-80	27-80-00-02	-178	01	6727750-45	29-10-00-10	-043	01
6727730-81	27-80-00-02	-181	01	6727750-46	29-10-00-10	-044	01
6727730-82	27-80-00-02	-182	01	6727750-47	29-10-00-10	-029	01
6727730-89	27-80-00-03	-004	01	6727750-48	29-10-00-10	-030	01
6727730-9	27-80-00-02	-010	01	6727750-5	29-10-00-10	-173	01
6727730-90	27-80-00-03	-005	01	6727750-51	29-10-00-10	-039	01
6727730-91	27-80-00-03	-008	01	6727750-52	29-10-00-10	-040	01
6727730-92	27-80-00-03	-009	01	6727750-6	29-10-00-10	-026	01
6727730-93	27-80-00-03	-010	01	6727750-61	27-80-00-01	-089	01
6727730-94	27-80-00-03	-011	01	6727750-62	27-80-00-01	-093	01
6727730-95	27-80-00-03	-080	01	6727750-63	27-80-00-01	-091	01
6727730-96	27-80-00-03	-081	01	6727750-64	27-80-00-01	-095	01
6727730-97	27-80-00-03	-078	01	6727750-65	27-80-00-01	-099	01
6727730-98	27-80-00-03	-079	01	6727750-66	27-80-00-01	-100	01
6727741-10	32-43-00-02	-078	01	6727750-67	27-80-00-01	-101	01
6727741-11	29-10-00-09	-084	01	6727750-68	27-80-00-01	-102	01
6727741-12	29-10-00-09	-091	01	6727750-77	29-10-00-10	-185	01
6727741-13	29-10-00-09	-082	01	6727750-78	29-10-00-10	-006	11
6727741-14	29-10-00-09	-089	01	6727750-80	27-80-00-01	-079	01
6727741-15	29-10-00-09	-077	01	6727750-81	27-80-00-01	-080	01
6727741-16	29-10-00-09	-096	01	6727750-82	27-80-00-01	-081	01
6727741-17	29-10-00-09	-075	01	6727750-83	27-80-00-01	-082	01
6727741-18	29-10-00-09	-098	01	6727750-84	27-80-00-01	-083	01
6727741-20	32-33-00-01	-300	01	6727750-85	27-80-00-01	-084	01
6727741-22	32-33-00-01	-301	01	6727750-86	27-80-00-01	-085	01
6727741-24	32-49-00-02	-081	01	6727750-87	27-80-00-01	-086	01
6727741-26	32-49-00-02	-082	01	6728003-10	33-40-35-02	-013	02
6727741-3	32-30-00-02	-020	01	6728003-12	33-40-35-02	-005	02
6727741-4	32-43-00-02	-076	01	6728003-19	33-40-35-02	-003	02
6727741-5	32-30-00-02	-022	01	6728015-1	30-20-00-02	-039	02
6727741-6	32-43-00-02	-079	01	6730000-204	55-40-00-01	-075A	01
6727741-7	32-30-00-02	-021	01	6730010-1	27-40-00-01	-002	01
6727741-8	32-43-00-02	-075	01	6730010-2	55-10-00-01	-001	02
6727741-9	32-30-00-02	-023	01	6730010-3	27-40-00-01	-003	01
6727750-11	29-10-00-10	-189	01	6730010-6	27-40-00-01	-010	02
6727750-12	29-10-00-10	-012	01	6730010-7	27-40-00-01	-011	02
6727750-13	29-10-00-10	-195	01	6730500-13	55-20-00-04	-005	01
6727750-14	29-10-00-10	-018	01	6730500-14	55-20-00-04	-006	01
6727750-15	27-80-00-01	-088	01	6730500-15	55-20-00-04	-003	02
6727750-16	27-80-00-01	-103	01	6730500-16	55-20-00-04	-004	02
6727750-17	27-80-00-01	-090	01	6730500-21	55-30-00-04	-088	01
6727750-18	27-80-00-01	-104	01	6730500-25	55-20-00-04	-007	01
6727750-19	27-80-00-01	-092	01	6730500-26	55-20-00-04	-008	01
6727750-20	27-80-00-01	-105	01	6730500-28	27-20-05-02	-092	01
6727750-21	27-80-00-01	-094	01	6730500-4	55-30-00-02	-094	01
6727750-22	27-80-00-01	-106	01	6730501-1	55-20-00-03	-007	02
6727750-24	29-10-00-10	-165	01	6730501-10	55-20-00-03	-004	01
6727750-25	29-10-00-10	-166	01	6730501-11	55-20-00-03	-013	02
6727750-27	29-10-00-10	-167	01	6730501-2	55-20-00-03	-008	02
6727750-28	29-10-00-10	-168	01	6730501-3	55-20-00-03	-001	01
6727750-29	29-10-00-10	-150	01	6730501-4	55-20-00-03	-002	01
6727750-3	29-10-00-10	-172	01	6730501-5	55-20-00-03	-014	04
6727750-30	29-10-00-10	-151	01	6730501-6	55-20-00-03	-015	04
6727750-33	29-10-00-10	-152	01	6730501-7	55-20-00-03	-011	01
6727750-34	29-10-00-10	-153	01	6730501-8	55-20-00-03	-012	01
6727750-35	29-10-00-10	-089	01	6730501-9	55-20-00-03	-003	01
6727750-36	29-10-00-10	-090	01	6730502-26	55-30-00-04	-248	01
6727750-39	29-10-00-10	-091	01	6730502-27	55-30-00-04	-249	01
6727750-4	29-10-00-10	-022	01	6730502-28	55-30-00-04	-250	01
6727750-40	29-10-00-10	-092	01	6730502-29	55-30-00-04	-251	01
6727750-41	29-10-00-10	-045	01	6730502-41	27-32-00-01	-100	02

© Cessna Aircraft Company

PART NUMBER	CH SEC SUBJ FIG	ITEM	REQ
6730502-42	27-32-00-01	-089	02
6730502-42	55-20-00-04	-010	01
6730502-9	55-20-00-04	-011	02
6730504-4	55-20-00-04	-009	01
6730504-5	55-20-00-04	-001	01
6730504-6	55-20-00-04	-002	01
6730504-9	55-20-00-04	-012	01
6730510-1	55-30-00-04	-123	01
6730510-3	55-30-00-04	-124	01
6731001-2	55-30-00-06	-014	02
6731001-3	55-30-00-06	-018	01
6731001-4	55-30-00-05	-094	02
6731001-4	55-30-00-05	-169	02
6731001-4	55-30-00-06	-023	01
6731001-4	55-30-00-07	-022	02
6731001-4	55-30-00-08	-083	02
6731001-8	55-30-00-05	-075	02
6731001-9	55-30-00-05	-085	02
6731002-3	55-30-00-06	-001	01
6731002-4	55-30-00-06	-002	01
6731003-2	55-30-00-07	-012	01
6731003-4	55-30-00-07	-018	01
6731003-5	55-30-00-05	-150	02
6731003-6	55-30-00-05	-160	02
6731003-9	55-30-00-07	-017	01
6731004-5	55-30-00-07	-001	01
6731004-6	55-30-00-07	-002	01
6731005-13	55-30-00-08	-084	01
6731005-25	55-30-00-08	-077	01
6731005-6	55-30-00-08	-015	01
6731005-7	55-30-00-08	-016	01
6731008-10	55-30-00-02	-191	01
6731008-14	55-30-00-02	-189	01
6731008-15	55-30-00-02	-190	01
6731008-8	55-30-00-02	-195	01
6731009-10	55-30-00-02	-226	01
6731009-4	55-30-00-02	-229	01
6731009-9	55-30-00-02	-225	01
6731011-18	55-30-00-04	-244	01
6731011-24	55-30-00-04	-254	02
6731011-26	55-30-00-04	-255	01
6731011-29	55-30-00-04	-239	01
6731011-31	55-30-00-04	-245	01
6731011-5	55-30-00-04	-243	01
6731011-6	55-30-00-04	-242	01
6731011-7	55-30-00-04	-241	01
6731012-21	55-30-00-04	-233	01
6731012-23	55-30-00-04	-227	01
6731012-24	55-30-00-04	-231	01
6731012-26	55-30-00-04	-230	01
6731012-35	55-30-00-04	-234	01
6731012-37	55-30-00-04	-226	01
6731012-38	55-30-00-04	-228	01
6731012-40	55-30-00-04	-225	01
6731013-15	55-30-00-04	-183	01
6731013-16	55-30-00-04	-181	01
6731013-19	55-30-00-04	-167	01
6731013-20	55-30-00-04	-174	01
6731013-27	55-30-00-04	-172	02
6731013-28	55-30-00-04	-182	01
6731013-29	55-30-00-04	-178	01
6731013-30	55-30-00-04	-175	04
6731013-31	55-30-00-04	-171	01
6731013-35	55-30-00-04	-011	01
6731013-35	55-30-00-04	-025	01
6731013-35	55-30-00-04	-079	01
6731013-35	55-30-00-04	-102	01
6731013-36	55-30-00-04	-012	01
6731013-36	55-30-00-04	-026	01
6731013-36	55-30-00-04	-080	01
6731013-36	55-30-00-04	-103	01
6731013-37	55-30-00-04	-015	01
6731013-37	55-30-00-04	-030	01
6731013-38	55-30-00-04	-016	01
6731013-38	55-30-00-04	-031	01
6731013-39	55-30-00-04	-084	01
6731013-39	55-30-00-04	-163	01
6731013-40	55-30-00-04	-085	01
6731013-40	55-30-00-04	-165	01
6731013-41	55-30-00-04	-155	01
6731013-42	55-30-00-04	-156	01
6731013-43	55-30-00-04	-179	01
6731013-44	55-30-00-04	-180	01
6731013-45	55-30-00-04	-170	01
6731013-46	55-30-00-04	-173	01
6731013-5	55-30-00-04	-004	01
6731013-6	55-30-00-04	-005	01
6731014-14	55-30-00-04	-161	01
6731014-15	55-30-00-04	-164	01
6731014-19	55-30-00-04	-153	01
6731014-20	55-30-00-04	-166	01
6731014-23	55-30-00-04	-154	01
6731014-24	55-30-00-04	-157	01
6731014-4	55-30-00-04	-150	01
6731014-5	55-30-00-04	-162	01
6731015-16	55-30-00-04	-120	01
6731015-17	55-30-00-04	-121	01
6731015-18	55-30-00-04	-101	01
6731015-21	55-30-00-04	-122	01
6731015-22	55-30-00-04	-107	01
6731015-4	55-30-00-04	-100	01
6731015-5	55-30-00-04	-106	01
6731015-6	55-30-00-04	-104	01
6731016-14	55-30-00-04	-078	01
6731016-20	55-30-00-04	-087	01
6731016-21	55-30-00-04	-086	01
6731016-22	55-30-00-04	-083	01
6731016-4	55-30-00-04	-075	01
6731016-5	55-30-00-04	-082	01
6731016-6	55-30-00-04	-081	01
6731017-10	55-30-00-04	-027	01
6731017-12	55-30-00-04	-029	01
6731017-13	55-30-00-04	-035	01
6731017-15	55-30-00-04	-021	01
6731017-4	55-30-00-04	-022	01
6731017-5	55-30-00-04	-028	01
6731018-12	55-30-00-04	-010	01
6731018-13	55-30-00-04	-017	01
6731018-14	55-30-00-04	-013	01
6731018-17	55-30-00-04	-014	01
6731018-19	55-30-00-04	-018	01
6731018-4	55-30-00-04	-007	01
6731018-9	55-30-00-04	-019	01
6731019-2	55-30-00-04	-006	01

© Cessna Aircraft Company

PART NUMBER	CH SEC SUBJ FIG	ITEM	REQ	PART NUMBER	CH SEC SUBJ FIG	ITEM	REQ
6731019-3	55-30-00-04	-001	01	6731026-7	55-30-00-02	-087	01
6731020-10	55-30-00-05	-002	01	6731026-8	55-30-00-02	-088	01
6731020-15	55-30-00-05	-178	01	6731027-11	55-30-00-02	-001	01
6731020-16	55-30-00-05	-101	01	6731027-2	55-30-00-02	-017	01
6731020-17	55-30-00-05	-006	02	6731027-3	55-30-00-02	-018	01
6731020-23	55-30-00-05	-014	01	6731027-4	55-30-00-02	-016	01
6731020-25	55-30-00-05	-017	01	6731027-5	55-10-00-01	-013	04
6731020-26	55-30-00-05	-015	01	6731027-5	55-30-00-02	-014	03
6731020-27	55-30-00-05	-020	01	6731028-18	55-30-00-04	-184	01
6731020-30	55-30-00-05	-007	01	6731028-19	55-30-00-04	-185	01
6731020-33	55-30-00-01	-006	01	6731028-20	55-30-00-04	-186	01
6731020-34	55-30-00-01	-007	01	6731028-7	55-30-00-04	-187	01
6731020-38	55-30-00-05	-102	01	6731030-10	55-30-00-02	-235	01
6731020-39	55-30-00-05	-179	01	6731030-2	55-30-00-02	-238	01
6731020-4	55-30-00-05	-095	01	6731030-9	55-30-00-02	-234	01
6731020-40	55-30-00-05	-021	01	6731031-10	55-30-00-04	-261	01
6731020-45	55-30-00-05	-009	01	6731031-2	55-30-00-04	-259	01
6731020-46	55-30-00-05	-018	01	6731031-6	55-30-00-04	-258	01
6731020-47	55-30-00-05	-019	01	6731031-9	55-30-00-04	-260	01
6731020-7	55-30-00-05	-170	01	6731032-12	55-30-00-04	-256	01
6731020-9	55-30-00-05	-001	01	6731032-4	55-30-00-04	-257	01
6731021-13	55-30-00-08	-001	01	6731035-6	55-30-00-08	-087	01
6731022-4	55-30-00-02	-028	01	6731036-2	27-40-00-01	-075	01
6731023-5	55-30-00-03	-028	01	6731036-3	27-40-00-01	-083	01
6731023-6	55-30-00-03	-029	01	6731036-4	27-40-00-01	-076	01
6731023-6	55-30-00-03	-099	01	6731036-5	27-40-00-01	-077	02
6731024-6	55-30-00-02	-015	01	6731036-7	27-40-00-01	-086	01
6731025-112	55-30-00-03	-075	01	6731036-8	27-40-00-01	-085	02
6731025-114	55-30-00-03	-080	01	6731037-10	27-40-00-01	-098	02
6731025-133	55-30-00-03	-012	01	6731037-2	27-40-00-01	-097	01
6731025-134	55-30-00-03	-087	01	6731037-5	27-40-00-01	-103	01
6731025-143	55-30-00-03	-013	01	6731037-9	27-40-00-01	-096	01
6731025-144	55-30-00-03	-088	01	6731040-17	55-30-00-02	-186	01
6731025-157	55-30-00-03	-011	01	6731040-18	55-30-00-02	-187	01
6731025-158	55-30-00-03	-086	01	6731040-19	55-30-00-02	-177	01
6731025-167	55-30-00-03	-008	01	6731040-23	55-30-00-02	-184	01
6731025-186	55-30-00-03	-083	01	6731040-24	55-30-00-02	-185	01
6731025-195	55-30-00-03	-005	01	6731040-25	55-30-00-02	-172	01
6731025-33	55-30-00-03	-014	01	6731040-28	55-40-00-01	-005	01
6731025-34	55-30-00-03	-090	01	6731040-29	55-30-00-02	-181	01
6731025-35	55-30-00-03	-015	01	6731040-30	55-30-00-02	-182	01
6731025-36	55-30-00-03	-089	01	6731040-31	55-30-00-02	-183	01
6731025-37	55-30-00-03	-010	01	6731041-12	55-30-00-02	-160	01
6731025-38	55-30-00-03	-085	01	6731041-8	55-30-00-02	-169	01
6731025-39	55-30-00-03	-009	01	6731043-13	55-30-00-03	-021	01
6731025-41	55-30-00-03	-007	01	6731043-18	55-30-00-03	-096	01
6731025-42	55-30-00-03	-084	01	6731046-16	55-40-00-01	-004	01
6731025-43	55-30-00-03	-006	01	6731046-17	55-40-00-01	-009	01
6731025-44	55-30-00-03	-081	01	6731046-18	55-30-00-02	-155	AR
6731025-45	55-30-00-03	-004	01	6731046-19	55-30-00-02	-156	AR
6731025-459	55-30-00-03	-016	01	6731046-20	55-30-00-02	-157	AR
6731025-46	55-30-00-03	-079	01	6731046-7	55-30-00-02	-150	01
6731025-461	55-30-00-03	-091	01	6731046-9	55-30-00-02	-168	01
6731025-47	55-30-00-03	-001	01	6731050-1	55-30-00-04	-190	01
6731025-48	55-30-00-03	-078	01	6731050-1	55-30-00-06	-011	06
6731025-49	55-30-00-03	-002	01	6731050-2	55-30-00-06	-015	02
6731025-50	55-30-00-03	-077	01	6731060-5	55-30-00-02	-019	01
6731026-10	55-30-00-02	-075	01	6731060-6	55-30-00-02	-020	01
6731026-3	27-40-00-01	-007	01	6731077-13	55-30-00-03	-003	01
6731026-4	55-30-00-02	-084	02	6731077-14	55-30-00-03	-076	01
6731026-5	55-30-00-02	-085	01	6731077-24	55-30-00-03	-082	01
6731026-6	55-30-00-02	-086	01	6731080-10	55-30-05-01	-003	01

© Cessna Aircraft Company

PART NUMBER	CH SEC SUBJ FIG	ITEM	REQ	PART NUMBER	CH SEC SUBJ FIG	ITEM	REQ
6731080-8	55-30-05-01	-001	01	6732019-3	55-10-00-02	-033	02
6731080-9	55-30-05-01	-002	01	6732019-31	55-10-00-02	-015	01
6731101-1	55-30-00-04	-089	01	6732019-32	55-10-00-02	-016	01
6731102-2	55-30-00-04	-032	01	6732019-35	55-10-00-02	-012	01
6731103-1	55-30-00-04	-034	01	6732019-37	55-10-00-02	-019	01
6731500-1	55-30-00-01	-001	01	6732019-38	55-10-00-02	-020	01
6731577-1	55-30-00-01	-004	01	6732019-4	55-10-00-02	-029	02
6731577-2	55-30-00-01	-005	01	6732019-5	55-10-00-02	-036	01
6732000-10	55-10-00-01	-075	01	6732019-6	55-10-00-02	-037	01
6732001-7	55-10-00-02	-006	02	6732020-3	55-10-00-02	-081	02
6732004-15	55-10-00-02	-005	02	6732020-4	55-10-00-02	-080	02
6732004-19	55-10-00-02	-001	01	6732020-4	55-10-00-02	-104	01
6732004-4	55-10-00-02	-007	02	6732020-5	55-10-00-02	-078	01
6732007-24	55-10-00-01	-179	01	6732020-5	55-10-00-02	-100	01
6732007-45	55-10-00-01	-178	01	6732020-6	55-10-00-02	-079	01
6732007-48	55-10-00-01	-175	01	6732020-6	55-10-00-02	-102	01
6732007-49	55-10-00-01	-174	01	6732020-7	55-10-00-02	-075	02
6732009-2	55-10-00-01	-089	01	6732022-17	55-10-00-01	-229	01
6732010-11	55-10-00-01	-006	04	6732022-21	55-10-00-01	-225	01
6732010-12	55-10-00-01	-012	01	6732022-22	55-10-00-01	-226	01
6732010-15	55-10-00-01	-102	01	6732022-23	55-10-00-01	-227	01
6732010-20	55-10-00-01	-005	01	6732022-24	55-10-00-01	-228	01
6732010-6	55-10-00-01	-111	02	6732022-31	55-10-00-01	-247	02
6732014-3	55-10-00-02	-056	02	6732023-13	55-10-00-01	-232	01
6732014-4	55-10-00-02	-055	02	6732023-14	55-10-00-01	-233	01
6732014-5	55-10-00-02	-053	01	6732023-15	55-10-00-01	-234	01
6732014-6	55-10-00-02	-054	01	6732023-16	55-10-00-01	-235	01
6732014-7	55-10-00-02	-052	02	6732023-19	55-10-00-01	-249	01
6732015-13	55-10-00-03	-008	01	6732023-20	55-10-00-01	-251	01
6732015-14	55-10-00-03	-009	01	6732023-9	55-10-00-01	-236	01
6732015-15	55-10-00-03	-010	01	6732024-11	55-10-00-01	-239	01
6732015-16	55-10-00-03	-011	01	6732024-12	55-10-00-01	-240	01
6732015-17	55-10-00-03	-014	01	6732024-13	55-10-00-01	-241	01
6732015-18	55-10-00-03	-015	01	6732024-14	55-10-00-01	-242	01
6732015-21	55-10-00-03	-023	01	6732024-17	55-10-00-01	-253	01
6732015-22	55-10-00-03	-024	01	6732024-18	55-10-00-01	-255	01
6732015-25	55-10-00-03	-021	01	6732024-8	55-10-00-01	-243	01
6732015-26	55-10-00-03	-022	01	6732025-13	55-10-00-01	-084	02
6732015-27	55-10-00-03	-025	01	6732025-13	55-10-00-02	-043	01
6732015-3	55-10-00-03	-001	01	6732025-14	55-10-00-02	-044	01
6732015-33	55-10-00-03	-016	01	6732025-5	55-10-00-01	-087	02
6732015-34	55-10-00-03	-017	01	6732025-5	55-10-00-02	-049	01
6732015-39	55-10-00-03	-027	01	6732025-6	55-10-00-02	-050	01
6732015-4	55-10-00-03	-002	01	6732025-7	55-10-00-02	-047	01
6732015-40	55-10-00-03	-028	01	6732025-8	55-10-00-02	-048	01
6732015-5	55-10-00-03	-012	01	6732026-10	55-10-00-02	-087	02
6732015-6	55-10-00-03	-013	01	6732026-19	55-10-00-02	-085	01
6732017-15	55-10-00-01	-076	01	6732026-20	55-10-00-02	-086	01
6732017-16	55-10-00-01	-077	01	6732026-21	55-10-00-02	-082	01
6732017-21	55-10-00-01	-076A	01	6732026-27	55-10-00-02	-083	01
6732017-22	55-10-00-01	-077A	01	6732026-28	55-10-00-02	-084	01
6732019-11	55-10-00-02	-021	02	6732026-5	55-10-00-02	-094	01
6732019-12	55-10-00-02	-022	02	6732026-6	55-10-00-02	-093	01
6732019-13	55-10-00-02	-034	01	6732026-7	55-10-00-02	-091	01
6732019-14	55-10-00-02	-035	01	6732026-8	55-10-00-02	-092	01
6732019-17	55-10-00-02	-017	01	6732026-9	55-10-00-02	-088	02
6732019-18	55-10-00-02	-018	01	6732028-1	55-10-10-01	-014	01
6732019-19	55-10-00-02	-013	01	6732028-10	55-10-10-01	-019	01
6732019-20	55-10-00-02	-014	01	6732028-11	55-10-10-01	-020	01
6732019-22	55-10-00-02	-038	02	6732028-12	55-10-10-01	-021	01
6732019-27	55-10-00-02	-039	02	6732028-13	55-10-10-01	-010	01
6732019-28	55-10-00-02	-040	02	6732028-13	55-10-10-01	-022	01

© Cessna Aircraft Company

PART NUMBER	CH SEC SUBJ FIG	ITEM	REQ	PART NUMBER	CH SEC SUBJ FIG	ITEM	REQ
6732028-14	55-10-10-01	-009	01	6732038-6	55-10-00-02	-116	01
6732028-14	55-10-10-01	-023	01	6732038-7	55-10-00-02	-112	02
6732028-17	55-10-10-01	-018A	01	6732038-8	55-10-00-02	-107	02
6732028-18	55-10-10-01	-019A	01	6732039-2	55-30-10-01	-007A	01
6732028-19	55-10-10-01	-020A	01	6732039-3	55-30-10-01	-009A	01
6732028-2	55-10-10-01	-015	01	6732039-4	55-30-10-01	-008A	01
6732028-20	55-10-10-01	-021A	01	6732045-13	55-10-00-02	-122	01
6732028-3	55-10-10-01	-016	01	6732045-14	55-10-00-02	-123	01
6732028-4	55-10-10-01	-017	01	6732045-3	55-10-00-02	-130	02
6732028-5	55-10-10-01	-013	01	6732045-4	55-10-00-02	-129	02
6732028-5	55-10-10-01	-025	01	6732045-5	55-10-00-02	-127	01
6732028-6	55-10-10-01	-012	01	6732045-6	55-10-00-02	-128	01
6732028-6	55-10-10-01	-026	01	6732045-7	55-10-00-02	-124	02
6732028-7	55-10-10-01	-011	01	6732045-8	55-10-00-02	-119	02
6732028-7	55-10-10-01	-024	01	6732052-11	55-10-00-02	-151	01
6732028-9	55-10-10-01	-018	01	6732052-12	55-10-00-02	-152	01
6732029-1	55-10-10-01	-001	01	6732052-13	55-10-00-02	-153	01
6732029-10	55-10-10-01	-006	01	6732052-14	55-10-00-02	-154	01
6732029-2	55-10-10-01	-002	01	6732052-17	55-10-00-02	-155	01
6732029-3	55-10-10-01	-003	01	6732052-18	55-10-00-02	-156	01
6732029-4	55-10-10-01	-004	01	6732052-3	55-10-00-02	-163	02
6732029-5	55-10-10-01	-007	01	6732052-4	55-10-00-02	-162	02
6732029-6	55-10-10-01	-008	01	6732052-5	55-10-00-02	-160	01
6732029-9	55-10-10-01	-005	01	6732052-6	55-10-00-02	-161	01
6732030-10	55-10-00-01	-171	01	6732052-7	55-10-00-02	-157	02
6732030-13	55-10-00-01	-150	NP	6732052-8	55-10-00-02	-150	02
6732030-14	55-10-00-01	-151	NP	6732060-3	55-10-00-02	-177	02
6732030-15	55-10-00-01	-152	NP	6732060-4	55-10-00-02	-178	02
6732030-16	55-10-00-01	-153	NP	6732060-5	55-10-00-02	-175	01
6732030-17	55-10-00-01	-154	NP	6732060-6	55-10-00-02	-176	01
6732030-18	55-10-00-01	-155	NP	6732060-8	55-10-00-02	-170	02
6732030-203	55-10-00-01	-150A	01	6732060-9	55-10-00-02	-179	01
6732030-204	55-10-00-01	-151A	01	6732061-15	55-10-00-02	-164	01
6732030-205	55-10-00-01	-152A	01	6732061-16	55-10-00-02	-165	01
6732030-206	55-10-00-01	-153A	01	6732067-3	55-10-00-02	-193	02
6732030-207	55-10-00-01	-154A	01	6732067-4	55-10-00-02	-192	02
6732030-208	55-10-00-01	-155A	01	6732067-5	55-10-00-02	-190	01
6732030-21	55-10-00-01	-150B	01	6732067-6	55-10-00-02	-191	01
6732030-22	55-10-00-01	-151B	01	6732067-7	55-10-00-02	-187	02
6732030-23	55-10-00-01	-152B	01	6732068-12	55-10-00-02	-181	01
6732030-24	55-10-00-01	-153B	01	6732068-25	55-10-00-02	-180	01
6732030-25	55-10-00-01	-154B	01	6732074-11	55-10-00-02	-225	01
6732030-26	55-10-00-01	-155B	01	6732074-12	55-10-00-02	-226	01
6732030-27	55-10-00-01	-170A	01	6732074-15	55-10-00-02	-233	01
6732030-28	55-10-00-01	-171A	01	6732074-16	55-10-00-02	-234	01
6732030-29	55-10-00-01	-160	01	6732074-17	55-10-00-02	-228	01
6732030-30	55-10-00-01	-163	01	6732074-18	55-10-00-02	-229	01
6732030-9	55-10-00-01	-170	01	6732074-19	55-10-00-02	-230	01
6732031-11	55-10-00-02	-101	01	6732074-20	55-10-00-02	-231	01
6732031-11	55-10-00-02	-108	01	6732074-3	55-10-00-02	-241	02
6732031-12	55-10-00-02	-103	01	6732074-4	55-10-00-02	-240	02
6732031-12	55-10-00-02	-109	01	6732074-5	55-10-00-02	-238	01
6732031-19	55-10-00-02	-095	01	6732074-6	55-10-00-02	-239	01
6732031-20	55-10-00-02	-096	01	6732074-7	55-10-00-02	-235	02
6732031-3	55-10-00-02	-106	02	6732074-8	55-10-00-02	-227	02
6732031-7	55-10-00-02	-105	02	6732083-10	55-10-00-02	-246	01
6732031-8	55-10-00-02	-098	02	6732083-3	55-10-00-02	-253	02
6732038-13	55-10-00-02	-110	01	6732083-4	55-10-00-02	-252	02
6732038-14	55-10-00-02	-111	01	6732083-5	55-10-00-02	-250	01
6732038-3	55-10-00-02	-118	02	6732083-6	55-10-00-02	-251	01
6732038-4	55-10-00-02	-117	02	6732083-7	55-10-00-02	-247	02
6732038-5	55-10-00-02	-115	01	6732083-8	55-10-00-02	-242	01

© Cessna Aircraft Company

PART NUMBER	CH SEC SUBJ FIG	ITEM	REQ
6732083-9	55-10-00-02	-245	01
6732092-10	55-10-00-02	-257	01
6732092-11	55-10-00-02	-266	01
6732092-12	55-10-00-02	-267	01
6732092-3	55-10-00-02	-264	02
6732092-4	55-10-00-02	-263	02
6732092-5	55-10-00-02	-261	01
6732092-6	55-10-00-02	-262	01
6732092-7	55-10-00-02	-258	02
6732092-8	55-10-00-02	-265	02
6732092-9	55-10-00-02	-256	01
6732101-10	55-10-00-02	-272	01
6732101-3	55-10-00-02	-279	02
6732101-4	55-10-00-02	-278	02
6732101-5	55-10-00-02	-276	01
6732101-6	55-10-00-02	-277	01
6732101-7	55-10-00-02	-273	02
6732101-8	55-10-00-02	-268	02
6732101-9	55-10-00-02	-271	01
6732110-10	55-10-00-02	-302	01
6732110-11	55-10-00-02	-308	01
6732110-12	55-10-00-02	-309	01
6732110-13	55-10-00-02	-311	02
6732110-4	55-10-00-02	-310	02
6732110-7	55-10-00-02	-305	02
6732110-8	55-10-00-02	-300	02
6732110-9	55-10-00-02	-301	01
6732116-17	55-10-00-01	-079	02
6732119-10	55-10-00-02	-316	01
6732119-11	55-10-00-02	-312	01
6732119-12	55-10-00-02	-313	01
6732119-3	55-10-00-02	-325	02
6732119-4	55-10-00-02	-324	02
6732119-5	55-10-00-02	-322	01
6732119-6	55-10-00-02	-323	01
6732119-7	55-10-00-02	-319	02
6732119-8	55-10-00-02	-314	02
6732119-9	55-10-00-02	-315	01
6732128-10	55-10-00-02	-328	01
6732128-11	55-10-00-02	-076	01
6732128-11	55-10-00-02	-089	01
6732128-11	55-10-00-02	-097	01
6732128-11	55-10-00-02	-113	01
6732128-11	55-10-00-02	-125	01
6732128-11	55-10-00-02	-158	01
6732128-11	55-10-00-02	-173	01
6732128-11	55-10-00-02	-188	01
6732128-11	55-10-00-02	-236	01
6732128-11	55-10-00-02	-248	01
6732128-11	55-10-00-02	-259	01
6732128-11	55-10-00-02	-274	01
6732128-11	55-10-00-02	-306	01
6732128-11	55-10-00-02	-320	01
6732128-11	55-10-00-02	-332	01
6732128-11	55-10-00-02	-346	01
6732128-11	55-10-00-02	-360	01
6732128-11	55-10-00-02	-385	01
6732128-12	55-10-00-02	-077	01
6732128-12	55-10-00-02	-090	01
6732128-12	55-10-00-02	-099	01
6732128-12	55-10-00-02	-114	01
6732128-12	55-10-00-02	-126	01
6732128-12	55-10-00-02	-159	01
6732128-12	55-10-00-02	-174	01
6732128-12	55-10-00-02	-189	01
6732128-12	55-10-00-02	-237	01
6732128-12	55-10-00-02	-249	01
6732128-12	55-10-00-02	-260	01
6732128-12	55-10-00-02	-275	01
6732128-12	55-10-00-02	-307	01
6732128-12	55-10-00-02	-321	01
6732128-12	55-10-00-02	-333	01
6732128-12	55-10-00-02	-347	01
6732128-12	55-10-00-02	-361	01
6732128-12	55-10-00-02	-386	01
6732128-13	55-10-00-02	-120	01
6732128-13	55-10-00-02	-243	01
6732128-13	55-10-00-02	-254	01
6732128-13	55-10-00-02	-269	01
6732128-13	55-10-00-02	-303	01
6732128-13	55-10-00-02	-317	01
6732128-13	55-10-00-02	-329	01
6732128-13	55-10-00-02	-341	01
6732128-13	55-10-00-02	-355	01
6732128-13	55-10-00-02	-380	01
6732128-14	55-10-00-02	-121	01
6732128-14	55-10-00-02	-244	01
6732128-14	55-10-00-02	-255	01
6732128-14	55-10-00-02	-270	01
6732128-14	55-10-00-02	-304	01
6732128-14	55-10-00-02	-318	01
6732128-14	55-10-00-02	-330	01
6732128-14	55-10-00-02	-342	01
6732128-14	55-10-00-02	-356	01
6732128-14	55-10-00-02	-381	01
6732128-15	55-10-00-02	-337	02
6732128-4	55-10-00-02	-336	02
6732128-5	55-10-00-02	-334	01
6732128-6	55-10-00-02	-335	01
6732128-7	55-10-00-02	-331	02
6732128-8	55-10-00-02	-326	02
6732128-9	55-10-00-02	-327	01
6732142-10	55-10-00-02	-344	01
6732142-11	55-10-00-02	-338	01
6732142-12	55-10-00-02	-339	01
6732142-3	55-10-00-02	-351	02
6732142-4	55-10-00-02	-350	02
6732142-5	55-10-00-02	-348	01
6732142-6	55-10-00-02	-349	01
6732142-7	55-10-00-02	-345	02
6732142-8	55-10-00-02	-340	02
6732142-9	55-10-00-02	-343	01
6732153-10	55-10-00-02	-409	01
6732153-11	55-10-00-02	-404	01
6732153-12	55-10-00-02	-405	01
6732153-13	55-10-00-02	-403	02
6732153-14	55-10-00-02	-402	02
6732153-15	55-10-00-02	-401	02
6732153-19	55-10-00-02	-406	01
6732153-20	55-10-00-02	-407	01
6732153-33	55-10-00-02	-399A	01
6732153-34	55-10-00-02	-400A	01
6732153-9	55-10-00-02	-408	01
6732156-10	55-10-00-02	-354	01

© Cessna Aircraft Company

PART NUMBER	CH SEC SUBJ FIG	ITEM	REQ
6732156-3	55-10-00-02	-363	02
6732156-4	55-10-00-02	-362	02
6732156-5	55-10-00-02	-358	01
6732156-6	55-10-00-02	-359	01
6732156-7	55-10-00-02	-357	02
6732156-8	55-10-00-02	-352	02
6732156-9	55-10-00-02	-353	01
6732169-10	55-10-00-02	-379	01
6732169-11	55-10-00-02	-375	01
6732169-12	55-10-00-02	-376	01
6732169-3	55-10-00-02	-388	02
6732169-4	55-10-00-02	-387	02
6732169-5	55-10-00-02	-383	01
6732169-6	55-10-00-02	-384	01
6732169-7	55-10-00-02	-382	02
6732169-8	55-10-00-02	-377	02
6732169-9	55-10-00-02	-378	01
6732183-10	55-10-00-02	-391	01
6732183-11	55-10-00-02	-392	01
6732183-12	55-10-00-02	-393	01
6732183-3	55-10-00-02	-398	02
6732183-4	55-10-00-02	-397	02
6732183-5	55-10-00-02	-395	01
6732183-6	55-10-00-02	-396	01
6732183-7	55-10-00-02	-394	02
6732183-8	55-10-00-02	-389	02
6732183-9	55-10-00-02	-390	01
6732197-3	55-10-00-02	-418	02
6732197-4	55-10-00-02	-417	02
6732197-5	55-10-00-02	-416	02
6732197-6	55-10-00-02	-415	02
6732197-7	55-10-00-02	-414	02
6732197-8	55-10-00-02	-412	02
6732197-9	55-10-00-02	-413	02
6732205-15	55-30-10-01	-023	01
6732205-16	55-30-10-01	-024	01
6732220-11	55-10-11-01	-006	02
6732220-12	55-10-11-01	-005	01
6732220-13	55-10-11-01	-011	01
6732220-3	55-10-11-01	-007	01
6732220-4	55-10-11-01	-008	01
6732220-5	55-10-11-01	-001	01
6732220-6	55-10-11-01	-002	01
6732251-19	55-30-10-01	-026	01
6732254-2	55-30-10-01	-007	NP
6732254-23	55-30-10-01	-009	NP
6732254-24	55-30-10-01	-008	NP
6732254-31	55-30-10-01	-001	01
6732254-32	55-30-10-01	-001A	01
6732256-4	55-30-10-01	-022	NP
6732256-70	55-30-10-01	-027	01
6732256-71	55-30-10-01	-028	01
6732256-73	55-30-10-01	-018	01
6732256-74	55-30-10-01	-019	01
6732256-84	55-30-10-01	-015	01
6732257-1	55-30-10-01	-012	NP
6732258-1	55-30-10-01	-030	01
6732258-7	55-30-10-01	-042	AR
6732258-8	55-30-10-01	-043	AR
6732259-1	55-30-10-01	-034	01
6732260-1	55-30-10-01	-039	01
6732266-1	55-30-10-01	-022A	01
6732267-1	55-30-10-01	-012A	01
6732268-1	55-10-10-01	-014A	01
6732268-2	55-10-10-01	-015A	01
6732268-3	55-10-10-01	-017A	01
6732268-4	55-10-10-01	-017B	02
6732269-1	55-10-10-01	-001A	01
6732269-2	55-10-10-01	-002A	01
6732300-1	55-10-00-01	-075A	01
6733011-6	55-40-00-01	-089	02
6733011-7	55-40-00-01	-086	02
6733014-3	55-40-00-01	-087	04
6733015-6	55-40-00-01	-093	01
6733020-2	55-40-00-01	-001	01
6733100-6	55-40-00-01	-075	NP
6733115-3	55-40-00-01	-096	01
6733115-7	55-40-00-01	-097	01
6733115-8	55-40-00-01	-098	01
6733123-1	55-40-00-01	-014	01
6733124-1	55-40-00-01	-015	01
6733126-10	55-40-00-01	-020	01
6733126-7	55-40-00-01	-019	01
6733126-8	55-40-00-01	-018	02
6733130-4	55-40-00-01	-022	01
6734000-17	55-20-00-01	-013	01
6734000-18	55-20-00-01	-014	01
6734001-11	55-20-00-01	-159	01
6734001-12	55-20-00-01	-160	01
6734001-21	55-20-00-01	-157	01
6734001-22	55-20-00-01	-158	01
6734001-23	55-20-00-01	-161	01
6734001-24	55-20-00-01	-162	01
6734004-5	55-20-00-01	-163	01
6734004-6	55-20-00-01	-164	01
6734005-4	55-20-00-01	-097	AR
6734005-6	55-20-00-01	-089	01
6734005-7	55-20-00-01	-093	01
6734005-8	55-20-00-01	-085	01
6734012-23	55-20-00-01	-152	NP
6734012-24	55-20-00-01	-153	NP
6734012-25	55-20-00-01	-156	01
6734012-26	55-20-00-01	-155	01
6734012-33	55-20-00-01	-150	NP
6734012-34	55-20-00-01	-151	NP
6734012-5	55-20-00-01	-154	01
6734015-10	55-20-00-02	-002	01
6734015-13	55-20-00-02	-005	01
6734015-15	55-20-00-02	-003	01
6734015-16	55-20-00-02	-004	01
6734015-20	55-20-00-02	-006	01
6734015-9	55-20-00-02	-001	01
6734021-19	55-20-00-01	-029A	01
6734021-20	55-20-00-01	-030A	01
6734021-25	55-20-00-01	-008A	01
6734022-11	55-20-00-01	-033	01
6734022-12	55-20-00-01	-034	01
6734022-21	55-20-00-01	-033A	01
6734022-22	55-20-00-01	-034A	01
6734022-25	55-20-00-01	-037A	02
6734022-26	55-20-00-01	-009A	01
6734022-27	55-20-00-01	-010A	01
6734023-43	55-20-00-01	-075A	01
6734023-44	55-20-00-01	-076A	01

© Cessna Aircraft Company

PART NUMBER	CH SEC SUBJ FIG	ITEM	REQ
6734023-45	55-20-00-01	-077A	01
6734023-46	55-20-00-01	-078A	01
6734023-51	55-20-00-01	-083A	01
6734024-41	55-20-00-01	-079A	01
6734024-42	55-20-00-01	-080A	01
6734024-43	55-20-00-01	-081A	01
6734024-44	55-20-00-01	-082A	01
6734024-49	55-20-00-01	-011A	02
6734024-50	55-20-00-01	-012A	02
6734025-22	55-20-00-02	-011	02
6734025-25	55-20-00-02	-007	01
6734025-26	55-20-00-02	-008	01
6734025-27	55-20-00-02	-009	01
6734025-28	55-20-00-02	-010	01
6734028-29	55-20-00-02	-014	01
6734028-30	55-20-00-02	-015	01
6734028-35	55-20-00-02	-012	01
6734028-36	55-20-00-02	-013	01
6734028-37	55-20-00-02	-016	02
6734034-15	55-20-00-02	-018	02
6734034-9	55-20-00-02	-017	02
6734039-10	55-20-00-02	-020	02
6734039-9	55-20-00-02	-019	02
6734044-11	55-20-00-02	-022	01
6734044-12	55-20-00-02	-023	01
6734044-21	55-20-00-02	-024	02
6734044-9	55-20-00-02	-021	02
6734050-10	55-20-00-01	-102	01
6734050-9	55-20-00-01	-101	01
6734054-17	55-20-00-02	-076	02
6734054-9	55-20-00-02	-075	02
6734059-15	55-20-00-02	-078	02
6734059-7	55-20-00-02	-077	02
6734064-21	55-20-00-02	-080A	01
6734064-22	55-20-00-02	-081A	01
6734064-27	55-20-00-02	-079	02
6734064-28	55-20-00-02	-082	02
6734064-28	55-20-00-02	-086	02
6734064-29	55-20-00-02	-080	01
6734064-30	55-20-00-02	-081	01
6734068-14	55-20-00-02	-083	02
6734068-7	55-20-00-02	-084	01
6734068-8	55-20-00-02	-085	01
6734075-15	55-20-00-02	-088	02
6734075-7	55-20-00-02	-087	02
6734083-15	55-20-00-02	-090	02
6734083-7	55-20-00-02	-089	02
6734090-15	55-20-00-02	-151	02
6734090-7	55-20-00-02	-150	02
6734098-15	55-20-00-02	-153	02
6734098-7	55-20-00-02	-152	02
6734106-15	55-20-00-02	-155	02
6734106-7	55-20-00-02	-154	02
6734114-23	55-20-00-02	-159	02
6734114-23	55-20-00-02	-163	02
6734114-27	55-20-00-02	-157A	01
6734114-28	55-20-00-02	-158A	01
6734114-33	55-20-00-02	-157	01
6734114-34	55-20-00-02	-158	01
6734114-7	55-20-00-02	-156	02
6734118-17	55-20-00-02	-161	01
6734118-18	55-20-00-02	-162	01
6734118-9	55-20-00-02	-160	02
6734127-7	55-20-00-02	-165	02
6734127-8	55-20-00-02	-164	02
6734138-7	55-20-00-02	-226	02
6734138-8	55-20-00-02	-225	02
6734152-7	55-20-00-02	-227	02
6734153-10	55-20-00-02	-240	02
6734153-19	55-20-00-02	-238	01
6734153-20	55-20-00-02	-239	01
6734153-21	55-20-00-02	-237	02
6734169-19	55-20-00-02	-230A	01
6734169-20	55-20-00-02	-231A	01
6734169-23	55-20-00-02	-230	01
6734169-24	55-20-00-02	-231	01
6734169-7	55-20-00-02	-228	02
6734169-7	55-20-00-02	-232	02
6734169-7	55-20-00-02	-236	02
6734169-8	55-20-00-02	-229	02
6734173-17	55-20-00-02	-234	01
6734173-18	55-20-00-02	-235	01
6734173-9	55-20-00-02	-233	02
6734300-3	55-20-00-01	-013A	01
6734300-4	55-20-00-01	-014A	01
6734305-1	55-20-00-01	-093A	01
6734312-3	55-20-00-01	-150A	01
6734312-4	55-20-00-01	-151A	01
6734312-5	55-20-00-01	-152A	01
6734312-6	55-20-00-01	-153A	01
6737002-12	29-10-00-11	-241	02
6737002-13	29-10-00-11	-105	02
6737002-14	29-23-00-01	-016	03
6737002-15	29-23-00-01	-017	01
6737002-17	29-10-00-11	-088	02
6737002-19	29-10-00-11	-238	01
6737002-3	29-10-00-11	-166	02
6737002-5	29-10-00-11	-083	02
6737002-7	29-10-00-11	-111	04
6737002-7	29-10-00-11	-158	09
6737002-7	29-10-00-11	-237	09
6737002-7	29-23-00-01	-019	02
6737701-12	29-10-00-11	-227	01
6737701-13	29-10-00-11	-169	01
6737701-14	29-10-00-11	-152	01
6737701-17	29-10-00-11	-228	01
6737701-18	29-10-00-11	-170	01
6737701-19	29-10-00-11	-153	01
6737701-2	29-10-00-11	-225	01
6737701-22	29-10-00-11	-186	01
6737701-23	29-10-00-11	-031	01
6737701-24	29-10-00-11	-032	01
6737701-25	29-10-00-11	-033	01
6737701-26	29-10-00-11	-034	01
6737701-27	29-10-00-11	-035	01
6737701-28	29-10-00-11	-036	01
6737701-29	29-10-00-11	-037	01
6737701-3	29-10-00-11	-168	01
6737701-30	29-10-00-11	-038	01
6737701-31	29-10-00-11	-187	01
6737701-4	29-10-00-11	-150	01
6737701-7	29-10-00-11	-226	01
6737701-8	29-10-00-11	-167	01
6737701-9	29-10-00-11	-151	01

© Cessna Aircraft Company

PART NUMBER	CH SEC SUBJ FIG	ITEM	REQ	PART NUMBER	CH SEC SUBJ FIG	ITEM	REQ
6737702-10	29-10-00-11	-093	01	6741052-2	32-10-00-01	-027B	01
6737702-11	29-10-00-11	-096	01	6741052-3	32-10-00-01	-026	01
6737702-12	29-10-00-11	-094	01	6741052-4	32-10-00-01	-027	01
6737702-13	29-10-00-11	-099	01	6741052-5	32-10-00-01	-026C	01
6737702-14	29-10-00-11	-095	01	6741052-6	32-10-00-01	-027C	01
6737702-15	29-10-00-11	-098	01	6741052-7	32-10-00-01	-026A	01
6737702-16	29-10-00-11	-100	01	6741052-8	32-10-00-01	-027A	01
6737702-17	29-10-00-11	-097	01	6741053-1	32-10-00-01	-111	01
6738008-12	55-10-00-02	-042	01	6741053-15	32-10-00-01	-111A	01
6738008-2	30-13-10-01	-107	01	6741054-3	32-41-20-01	-001	04
6738008-3	55-10-00-02	-041	01	6741054-4	32-41-20-01	-001A	04
6738011-2	27-40-00-01	-155	01	6741063-3	32-41-20-01	-005	01
6738011-5	27-40-00-01	-154	01	6741063-4	32-41-20-01	-005A	01
6738021-9	27-40-00-01	-020	01	6741101-5	32-31-25-01	-022	04
6738022-7	27-40-00-01	-015	01	6741702-12	32-35-00-01	-075	01
6738022-7	27-40-00-01	-016	01	6741702-13	32-35-00-01	-005	01
6738023-3	27-40-00-01	-022	01	6741702-13	32-35-00-01	-024	02
6738023-4	27-40-00-01	-026	01	6741702-15	32-35-00-01	-014	NP
6741001-1	32-41-20-01	-002	01	6741702-201	32-35-00-01	-032	01
6741002-1	32-30-30-01	-004	01	6741702-202	32-35-00-01	-015	01
6741003-1	32-10-00-01	-010	02	6741702-6	32-35-00-01	-083	01
6741004-9	32-10-00-01	-087	01	6741702-8	32-35-00-01	-031	NP
6741005-1	32-41-20-01	-003	01	6741704-5	32-35-00-01	-092	02
6741006-1	32-10-00-01	-018	01	6741704-6	32-35-00-01	-085	01
6741006-4	32-10-00-01	-023	01	6742001-16	32-35-00-02	-043	01
6741006-6	32-10-00-01	-017	01	6742001-17	32-35-00-02	-034	01
6741007-12	32-35-00-01	-042	02	6742001-23	32-35-00-02	-019	01
6741007-13	32-35-00-01	-010	01	6742001-24	32-35-00-02	-018	02
6741007-7	32-35-00-01	-027	01	6742001-37	32-35-00-02	-044	01
6741007-8	32-35-00-01	-026	01	6742001-40	32-35-00-02	-030	01
6741007-9	32-35-00-01	-025	02	6742001-41	32-31-05-01	-007	01
6741008-1	32-61-00-01	-087	02	6742001-42	32-35-00-02	-026	01
6741012-10	32-10-00-01	-107	01	6742001-43	32-35-00-02	-035	01
6741012-9	32-10-00-01	-106	01	6742002-10	32-35-00-01	-002	01
6741013-6	32-10-00-01	-075	01	6742002-12	32-35-00-02	-040	01
6741013-7	32-10-00-01	-075A	01	6742002-14	32-35-00-02	-001	01
6741015-10	32-10-00-01	-028	01	6742028-27	32-30-00-01	-094	02
6741015-5	32-10-00-01	-029	01	6742028-28	32-30-00-01	-097	02
6741015-7	32-10-00-01	-104	01	6742028-29	32-31-05-01	-034	02
6741015-8	32-10-00-01	-103	01	6742028-3	32-31-05-01	-027	01
6741016-4	32-10-00-01	-097	01	6742101-16	32-31-05-01	-039	02
6741016-9	32-10-00-01	-088	01	6742101-24	32-31-05-01	-019	01
6741017-4	32-10-00-01	-078	01	6742101-3	32-31-05-01	-009	02
6741017-6	32-10-00-01	-077	01	6742101-9	32-31-05-01	-003	01
6741019-3	32-61-00-01	-088	01	6742111-13	32-30-00-01	-010	02
6741024-1	32-10-00-01	-082	01	6742111-46	32-30-00-01	-084	04
6741024-2	32-10-30-01	-092	02	6742111-48	32-30-00-01	-008	01
6741024-3	32-10-30-01	-013	02	6742111-53	32-30-00-01	-002	01
6741024-4	32-10-30-01	-011	02	6742111-54	32-30-00-01	-003	01
6741024-5	52-80-00-01	-008	01	6742111-55	32-30-00-01	-077	01
6741024-6	52-80-00-01	-009	01	6742111-56	32-30-00-01	-076	01
6741026-3	32-10-00-01	-101	01	6742111-57	32-30-00-01	-075	02
6741026-4	32-10-00-01	-102	01	6742111-8	32-30-00-01	-012	02
6741026-5	32-10-00-01	-101A	01	6742112-1	32-30-00-01	-005	02
6741026-6	32-10-00-01	-102A	01	6742112-2	32-30-00-01	-004	02
6741029-3	32-31-25-01	-010	01	6742121-7	33-40-35-01	-025	01
6741029-4	32-31-25-01	-011	01	6742123-17	33-40-35-01	-019	01
6741029-7	32-31-25-01	-018	01	6742123-18	33-40-35-01	-020	01
6741032-3	32-10-00-01	-083	01	6742123-19	33-40-35-01	-017	01
6741033-1	32-10-00-01	-106A	01	6742123-20	33-40-35-01	-018	01
6741033-2	32-10-00-01	-107A	01	6742123-21	33-40-35-01	-015	01
6741052-1	32-10-00-01	-026B	01	6742123-22	33-40-35-01	-016	01

© Cessna Aircraft Company

PART NUMBER	CH SEC SUBJ FIG	ITEM	REQ	PART NUMBER	CH SEC SUBJ FIG	ITEM	REQ
6742123-35	33-40-35-01	-030	01	6747701-44	32-30-00-02	-079	01
6742123-36	33-40-35-01	-031	01	6747701-45	32-30-00-02	-075	01
6742123-42	33-40-35-01	-023	02	6747701-46	32-33-00-01	-382	01
6742123-43	33-40-35-01	-013	01	6747701-47	32-30-00-02	-157	01
6742123-44	33-40-35-01	-014	01	6747701-50	32-30-00-02	-159	01
6742123-45	33-40-35-01	-007	01	6747701-7	32-30-00-02	-084	01
6742123-46	33-40-35-01	-008	01	6747701-8	32-30-00-02	-082	01
6742123-5	33-40-35-01	-027	02	6747701-9	29-10-00-05	-005	01
6742123-6	33-40-35-01	-028	02	6747702-17	32-49-00-03	-103	01
6742220-2	32-30-20-01	-006	01	6747702-18	32-49-00-03	-104	01
6742220-5	32-30-20-01	-011	01	6747702-19	32-49-00-03	-105	01
6742220-6	32-30-20-01	-012	01	6747702-20	32-49-00-03	-106	01
6742511-1	32-30-00-01	-012A	02	6747702-21	32-43-00-02	-266	02
6742511-3	32-30-00-01	-084A	04	6747702-22	32-43-00-02	-267	02
6742540-1	32-41-05-01	-001	02	6747702-23	32-49-00-03	-107	01
6742540-2	32-41-05-01	-006	01	6747702-24	32-49-00-03	-108	01
6742540-3	32-41-05-01	-001A	02	6747702-35	32-43-00-02	-235	01
6742540-4	32-41-05-01	-006A	01	6747702-36	32-43-00-02	-236	01
6742560-1	32-20-00-01	-001B	01	6747702-37	32-49-00-03	-083	01
6742560-2	32-20-00-01	-001	01	6747702-38	32-49-00-03	-084	01
6742560-4	32-20-00-01	-001C	01	6747702-43	32-43-00-02	-233	01
6742560-5	32-20-00-01	-001A	01	6747702-44	32-43-00-02	-234	01
6742701-2	32-35-00-02	-039	01	6747703-2	32-30-00-02	-092A	01
6742702-10	32-35-00-02	-010A	01	6747703-3	32-30-00-02	-099A	01
6742702-11	32-35-00-02	-012A	01	6747703-4	32-30-00-02	-101A	01
6742702-15	32-35-00-02	-022A	01	6747703-5	32-30-00-02	-103A	01
6742702-2	32-35-00-02	-010	01	6747703-6	32-30-00-02	-105A	01
6742702-3	32-35-00-02	-012	01	6747703-7	32-30-00-02	-157A	01
6742702-4	32-35-00-02	-022	01	6747703-8	32-30-00-02	-159A	01
6742702-6	32-35-00-02	-014	01	6747703-9	32-33-00-01	-384A	01
6742702-7	32-35-00-02	-013	01	6748015-13	32-20-00-01	-025	01
6747001-4	32-43-00-02	-258	02	6748015-17	32-20-00-01	-021	04
6747001-4	32-49-00-03	-102	02	6748015-8	32-51-00-01	-040	01
6747001-5	32-43-00-02	-248	04	6750602-7	24-35-00-01	-092	01
6747001-5	32-49-00-03	-098	02	6750603-1	24-35-00-01	-084	01
6747001-6	32-43-00-02	-243	01	6750603-10	24-35-00-01	-006	01
6747001-7	32-43-00-02	-237	01	6750603-14	24-35-00-01	-010	01
6747003-23	32-31-25-01	-030	02	6750603-2	24-35-00-01	-080	01
6747005-1	32-31-05-01	-001A	01	6750603-3	24-35-00-01	-075	01
6747005-1	32-31-25-01	-001A	01	6750603-7	24-35-00-01	-083	01
6747005-2	32-31-25-01	-002A	01	6750603-8	24-35-00-01	-079	01
6747006-1	11-N-27-02	-001A	02	6750604-1	49-10-00-01	-023	01
6747701-11	29-10-00-05	-001	01	6751000-1	49-10-00-01	-008	02
6747701-15	32-33-00-01	-384	01	6751001-1	49-10-00-01	-009	01
6747701-16	29-10-00-05	-012	01	6751004-1	54-50-00-01	-018	01
6747701-17	32-30-00-02	-092	01	6751004-2	54-50-00-01	-019	01
6747701-2	29-10-00-05	-086	01	6751004-3	54-50-00-01	-022	01
6747701-29	32-30-00-02	-178	02	6751004-4	54-50-00-01	-023	01
6747701-3	29-10-00-05	-013	01	6751004-5	54-50-00-01	-024	01
6747701-31	32-30-00-02	-103	01	6751004-6	54-50-00-01	-025	01
6747701-32	32-30-00-02	-105	01	6751004-7	54-50-00-01	-026	01
6747701-34	32-33-00-01	-378	01	6751004-8	54-50-00-01	-027	01
6747701-35	32-30-00-02	-166	01	6751210-37	54-60-00-01	-077	02
6747701-36	32-30-00-02	-168	01	6751210-41	54-60-00-01	-080	01
6747701-37	32-33-00-01	-388	01	6751210-42	54-60-00-01	-088	01
6747701-38	32-33-00-01	-385	01	6751210-43	54-60-00-01	-006	01
6747701-39	32-30-00-02	-094	01	6751210-44	54-60-00-01	-007	01
6747701-4	29-10-00-05	-087	01	6751210-45	54-60-00-01	-008	01
6747701-40	29-10-00-05	-078	01	6751210-46	54-60-00-01	-009	01
6747701-41	29-10-00-05	-075	01	6751210-47	54-60-00-01	-015	01
6747701-42	32-30-00-02	-101	01	6751210-48	54-60-00-01	-016	01
6747701-43	32-30-00-02	-099	01	6751210-51	54-60-00-01	-075	01

© Cessna Aircraft Company

PART NUMBER	CH SEC SUBJ FIG	ITEM	REQ	PART NUMBER	CH SEC SUBJ FIG	ITEM	REQ
6751210-52	54-60-00-01	-076	01	6751320-113	54-50-00-01	-034	01
6751210-54	54-60-00-01	-079	01	6751320-114	54-50-00-01	-035	01
6751211-20	52-40-47-01	-009	01	6751320-117	54-50-00-01	-172	01
6751211-26	52-40-47-01	-017	01	6751320-118	54-50-00-01	-173	01
6751211-27	52-40-47-01	-018	01	6751320-119	54-50-00-01	-140	01
6751211-28	52-40-47-01	-019	01	6751320-12	54-50-00-01	-159	01
6751211-29	52-40-47-01	-016	01	6751320-120	54-50-00-01	-141	01
6751211-30	52-40-47-01	-015	03	6751320-121	54-50-00-01	-178	01
6751211-30	54-50-00-01	-171	01	6751320-122	54-50-00-01	-179	01
6751211-31	54-60-00-01	-087	01	6751320-123	54-60-00-01	-153	01
6751211-33	54-60-00-01	-084	01	6751320-124	54-60-00-01	-154	01
6751211-35	54-60-00-01	-083	01	6751320-35	54-50-00-01	-146	01
6751211-6	52-40-47-01	-010	01	6751320-36	54-50-00-01	-147	01
6751211-7	52-40-47-01	-011	01	6751320-39	54-50-00-01	-169	02
6751220-37	52-40-47-01	-007	10	6751320-40	54-50-00-01	-170	02
6751220-42	52-40-47-01	-003	02	6751320-41	54-50-00-01	-010	01
6751220-43	52-40-47-01	-004	02	6751320-42	54-50-00-01	-011	01
6751220-44	52-40-47-01	-005	02	6751320-43	54-50-00-01	-014	01
6751220-51	54-60-00-01	-164	01	6751320-44	54-50-00-01	-015	01
6751220-52	54-60-00-01	-165	01	6751320-45	54-50-00-01	-163	02
6751220-53	54-60-00-01	-170	01	6751320-46	54-50-00-01	-164	02
6751220-54	54-60-00-01	-171	01	6751320-47	54-50-00-01	-165	02
6751220-55	54-60-00-01	-177	01	6751320-48	54-50-00-01	-166	02
6751220-56	54-60-00-01	-178	01	6751320-49	54-50-00-01	-167	02
6751220-59	52-40-47-01	-001	01	6751320-5	54-50-00-01	-152	01
6751220-60	52-40-47-01	-002	01	6751320-50	54-50-00-01	-168	01
6751230-19	54-60-00-01	-150	01	6751320-63	54-50-00-01	-211	01
6751230-20	54-60-00-01	-151	01	6751320-64	54-50-00-01	-212	01
6751240-1	54-60-00-01	-157	01	6751320-65	54-50-00-01	-215	01
6751240-2	54-60-00-01	-158	01	6751320-66	54-50-00-01	-216	01
6751240-7	54-60-00-01	-159	01	6751320-67	54-50-00-01	-038	01
6751250-10	54-50-00-01	-009	01	6751320-68	54-50-00-01	-039	01
6751250-13	54-50-00-01	-012	01	6751320-69	54-50-00-01	-042	01
6751250-14	54-50-00-01	-013	01	6751320-7	54-50-00-01	-156	01
6751250-15	54-50-00-01	-040	01	6751320-70	54-50-00-01	-043	01
6751250-16	54-50-00-01	-041	01	6751320-81	54-50-00-01	-209	01
6751250-17	54-50-00-01	-016	01	6751320-82	54-50-00-01	-210	01
6751250-18	54-50-00-01	-017	01	6751320-83	54-50-00-01	-213	01
6751250-19	54-50-00-01	-028	01	6751320-84	54-50-00-01	-214	01
6751250-20	54-50-00-01	-029	01	6751320-87	54-50-00-01	-142	01
6751250-21	54-50-00-01	-020	01	6751320-88	54-50-00-01	-143	01
6751250-22	54-50-00-01	-021	01	6751320-89	54-50-00-01	-144	01
6751250-23	54-50-00-01	-032	01	6751320-9	54-50-00-01	-154	01
6751250-24	54-50-00-01	-033	01	6751320-90	54-50-00-01	-145	01
6751250-31	54-60-00-01	-001	01	6751320-91	54-50-00-01	-176	01
6751250-32	54-60-00-01	-002	01	6751320-92	54-50-00-01	-177	01
6751250-5	54-50-00-01	-036	01	6751320-97	54-50-00-01	-174	01
6751250-6	54-50-00-01	-037	01	6751320-98	54-50-00-01	-175	01
6751250-9	54-50-00-01	-008	01	6751320-99	54-50-00-01	-004	01
6751251-4	54-50-00-01	-161	01	6751321-17	54-50-00-01	-157	01
6751320-1	54-50-00-01	-160	01	6751321-18	54-50-00-01	-153	01
6751320-10	54-50-00-01	-155	01	6751321-19	54-50-00-01	-162	01
6751320-100	54-50-00-01	-005	01	6751330-1	54-50-00-01	-187	01
6751320-101	54-50-00-01	-006	01	6751330-10	54-50-00-01	-182	02
6751320-102	54-50-00-01	-007	01	6751330-11	54-50-00-01	-184	01
6751320-103	54-50-00-01	-150	01	6751330-12	54-50-00-01	-185	01
6751320-104	54-50-00-01	-151	01	6751330-13	54-50-00-01	-192	01
6751320-107	54-50-00-01	-180	02	6751330-14	54-50-00-01	-193	01
6751320-108	54-50-00-01	-181	02	6751330-2	54-50-00-01	-188	01
6751320-11	54-50-00-01	-158	01	6751330-5	54-50-00-01	-195	01
6751320-111	54-50-00-01	-030	01	6751330-8	54-50-00-01	-186	02
6751320-112	54-50-00-01	-031	01	6751330-9	54-50-00-01	-183	02

© Cessna Aircraft Company

PART NUMBER	CH SEC SUBJ FIG	ITEM	REQ	PART NUMBER	CH SEC SUBJ FIG	ITEM	REQ
6751340-1	54-60-00-01	-162	01	6752202-1	71-10-00-01	-001	01
6751340-2	54-60-00-01	-163	01	6752202-2	71-10-00-01	-002	01
6751350-10	54-50-00-01	-204	01	6752205-1	71-10-00-01	-239	01
6751350-13	54-50-00-01	-207	01	6752205-10	71-10-00-01	-232	01
6751350-3	54-50-00-01	-200	01	6752205-11	71-10-00-01	-229	01
6751350-4	54-50-00-01	-201	01	6752205-12	71-10-00-01	-230	01
6751350-5	54-50-00-01	-197	01	6752205-13	71-10-00-01	-227	01
6751350-6	54-50-00-01	-198	01	6752205-14	71-10-00-01	-228	01
6751350-9	54-50-00-01	-203	01	6752205-15	71-10-00-01	-225	01
6751400-14	29-10-00-02	-103	02	6752205-16	71-10-00-01	-226	01
6751400-23	29-10-05-01	-006	01	6752205-17	71-10-00-01	-237	01
6751400-24	29-10-05-01	-008	01	6752205-18	71-10-00-01	-238	01
6751400-29	29-10-05-01	-005	01	6752205-2	71-10-00-01	-240	01
6751400-30	29-10-05-01	-007	01	6752205-5	71-10-00-01	-235	01
6751410-35	53-60-04-01	-001	01	6752205-6	71-10-00-01	-236	01
6751410-36	53-60-04-01	-002	01	6752205-7	71-10-00-01	-233	01
6751410-37	53-60-04-01	-007	01	6752205-8	71-10-00-01	-234	01
6751410-38	53-60-04-01	-008	01	6752205-9	71-10-00-01	-231	01
6751410-39	53-60-04-01	-014	01	6752206-17	71-10-00-01	-171	08
6751410-40	53-60-04-01	-015	01	6752206-19	71-10-00-01	-156	01
6751410-43	53-60-04-01	-026	01	6752206-20	71-10-00-01	-157	01
6751410-44	53-60-04-01	-027	01	6752206-21	71-10-00-01	-154	01
6751410-45	53-60-04-01	-028	01	6752206-22	71-10-00-01	-155	01
6751410-47	53-60-04-01	-033	01	6752206-23	71-10-00-01	-152	01
6751410-48	53-60-04-01	-034	01	6752206-24	71-10-00-01	-153	01
6751410-49	53-60-04-01	-035	01	6752206-25	71-10-00-01	-150	01
6751410-50	53-60-04-01	-036	01	6752206-26	71-10-00-01	-151	01
6751410-51	53-60-04-01	-020	01	6752206-27	71-10-00-01	-167	01
6751410-52	53-60-04-01	-021	01	6752206-28	71-10-00-01	-168	01
6751410-53	53-60-04-01	-029	01	6752206-29	71-10-00-01	-165	01
6751502-25	71-20-00-01	-003	04	6752206-30	71-10-00-01	-166	01
6751507-19	71-00-00-01	-007	16	6752206-31	71-10-00-01	-163	01
6751601-5	71-20-00-01	-008	01	6752206-32	71-10-00-01	-164	01
6751601-6	71-20-00-01	-009	01	6752206-33	71-10-00-01	-161	01
6751603-1	71-20-00-01	-001	01	6752206-34	71-10-00-01	-162	01
6751603-2	71-20-00-01	-002	01	6752211-14	71-10-00-01	-007	01
6751603-3	71-20-00-01	-001A	01	6752211-15	71-10-00-01	-006	01
6751603-4	71-20-00-01	-002A	01	6752211-16	71-10-00-01	-009	01
6751801-1	49-10-00-01	-016	01	6752211-17	71-10-00-01	-008	01
6751850-11	24-35-00-01	-011	01	6752221-43	71-10-00-01	-078	01
6751850-12	24-35-00-01	-009	01	6752221-44	71-10-00-01	-079	01
6752001-11	71-10-00-01	-265	01	6752221-45	71-10-00-01	-075	01
6752001-12	71-10-00-01	-269	01	6752221-46	71-10-00-01	-076	01
6752001-13	71-10-00-01	-081	08	6752223-1	71-10-00-01	-013	01
6752001-8	71-10-00-01	-271	04	6752223-2	71-10-00-01	-014	01
6752100-27	71-60-00-01	-012	01	6752223-3	71-10-00-01	-015	01
6752100-30	71-60-00-01	-013	01	6752223-4	71-10-00-01	-016	01
6752107-1	71-60-00-01	-020	01	6752223-5	71-10-00-01	-017	01
6752112-17	71-60-00-01	-010	01	6752223-6	71-10-00-01	-018	01
6752112-9	71-60-00-01	-008	01	6752300-1	71-60-00-01	-001	01
6752201-17	71-10-00-01	-250	02	6752300-2	71-60-00-01	-002	01
6752201-49	52-40-45-01	-005	02	6752301-15	71-60-00-01	-031	02
6752201-56	52-40-45-01	-001	02	6752304-3	71-60-00-01	-025	01
6752201-70	73-10-00-02	-018	01	6752304-4	71-60-00-01	-021	01
6752201-71	73-10-00-02	-019	01	6752304-8	71-60-00-01	-016	01
6752201-73	71-60-00-01	-032	04	6752304-9	71-60-00-01	-023	01
6752201-75	71-60-00-01	-037	01	6752305-1	71-60-00-01	-005	01
6752201-76	71-60-00-01	-034	02	6752306-1	30-20-00-02	-042	02
6752201-77	71-10-00-01	-247	01	6752307-1	71-60-00-01	-027	01
6752201-78	71-10-00-01	-248	01	6753110-10	54-50-00-01	-069	01
6752201-79	71-10-00-01	-275	02	6753110-102	54-50-00-01	-098	01
6752201-80	71-10-00-01	-249	04	6753110-103	54-50-00-01	-080	01

© Cessna Aircraft Company

PART NUMBER	CH SEC SUBJ FIG	ITEM	REQ
6753110-104	54-50-00-01	-081	01
6753110-108	54-50-00-01	-058	01
6753110-109	54-50-00-01	-055	01
6753110-11	54-50-00-01	-127	01
6753110-110	54-50-00-01	-056	01
6753110-111	54-50-00-01	-059	01
6753110-112	54-50-00-01	-060	01
6753110-113	54-50-00-01	-061	01
6753110-114	54-50-00-01	-062	01
6753110-115	54-60-00-01	-184	02
6753110-12	54-50-00-01	-128	01
6753110-120	54-50-00-01	-099	01
6753110-121	54-50-00-01	-120	01
6753110-122	54-50-00-01	-121	01
6753110-123	54-50-00-01	-118	01
6753110-124	54-50-00-01	-119	01
6753110-125	54-50-00-01	-116	01
6753110-126	54-50-00-01	-117	01
6753110-127	54-50-00-01	-114	01
6753110-128	54-50-00-01	-115	01
6753110-13	54-50-00-01	-129	01
6753110-131	54-50-00-01	-092	01
6753110-132	54-50-00-01	-093	01
6753110-133	54-50-00-01	-094	01
6753110-134	54-50-00-01	-077	01
6753110-135	54-50-00-01	-075	01
6753110-136	54-50-00-01	-076	01
6753110-14	54-50-00-01	-130	01
6753110-15	54-60-00-01	-010	01
6753110-16	54-60-00-01	-012	01
6753110-17	54-60-00-01	-011	01
6753110-18	54-60-00-01	-013	01
6753110-19	54-60-00-01	-014	01
6753110-20	54-60-00-01	-017	01
6753110-22	54-60-00-01	-018	01
6753110-27	54-50-00-01	-110	01
6753110-28	54-50-00-01	-111	01
6753110-29	54-50-00-01	-112	01
6753110-30	54-50-00-01	-113	01
6753110-39	54-50-00-01	-095	04
6753110-5	54-50-00-01	-066	01
6753110-51	54-50-00-01	-106	01
6753110-52	54-50-00-01	-107	01
6753110-53	54-50-00-01	-108	01
6753110-54	54-50-00-01	-109	01
6753110-55	54-50-00-01	-135	01
6753110-56	54-50-00-01	-136	01
6753110-6	54-50-00-01	-067	01
6753110-61	54-50-00-01	-131	01
6753110-64	54-50-00-01	-082	01
6753110-64	54-50-00-01	-132	01
6753110-65	54-50-00-01	-083	01
6753110-65	54-50-00-01	-133	01
6753110-66	54-50-00-01	-134	01
6753110-67	54-50-00-01	-084	01
6753110-68	54-50-00-01	-085	01
6753110-7	54-50-00-01	-217	01
6753110-75	54-50-00-01	-096	01
6753110-76	54-50-00-01	-097	01
6753110-8	54-50-00-01	-218	01
6753110-83	54-50-00-01	-078	01
6753110-84	54-50-00-01	-079	01
6753110-87	54-50-00-01	-044	01
6753110-88	54-50-00-01	-045	01
6753110-89	54-50-00-01	-047	01
6753110-9	54-50-00-01	-068	01
6753110-90	54-50-00-01	-048	01
6753110-91	54-50-00-01	-050	01
6753110-92	54-50-00-01	-051	01
6753110-93	54-50-00-01	-049	01
6753110-99	54-50-00-01	-148	02
6753151-1	54-50-00-01	-002	01
6753151-2	54-50-00-01	-003	01
6754600-12	49-80-00-01	-014	01
6754600-14	53-30-02-03	-168	01
6754612-16	49-80-00-01	-006	01
6754613-12	49-80-00-01	-004	01
6754615-10	52-40-23-01	-015	01
6754615-11	52-40-23-01	-016	01
6754615-12	52-40-23-01	-017	01
6754615-13	52-40-23-01	-018	01
6754615-14	52-40-23-01	-019	01
6754615-15	52-40-23-01	-001	01
6754615-16	11-N-23-02	-150	01
6754615-4	52-40-11-01	-011	01
6754615-4	52-40-23-01	-006	01
6754615-5	52-40-23-01	-007	01
6754615-6	52-40-23-01	-011	01
6754615-7	52-40-23-01	-012	01
6754615-8	52-40-23-01	-013	01
6754615-9	52-40-23-01	-014	01
6755001-15	71-70-00-01	-015	01
6755001-16	71-70-00-01	-014	01
6755001-17	71-70-00-01	-019	01
6755001-26	71-70-00-01	-005	01
6755001-27	71-70-00-01	-007	01
6755001-28	71-70-00-01	-013	01
6755001-29	71-70-00-01	-012	01
6755001-3	71-70-00-01	-001	01
6755001-32	71-70-00-01	-022	01
6755001-33	71-70-00-01	-031	02
6755001-36	71-70-00-01	-029	01
6755001-37	71-70-00-01	-027	01
6755001-4	71-70-00-01	-003	01
6755001-7	71-70-00-01	-017	01
6755001-9	71-70-00-01	-020	01
6755002-3	26-10-00-01	-008	30
6755002-6	26-10-00-01	-004	01
6755002-9	26-10-00-01	-003	02
6755004-3	24-30-00-01	-011	01
6755004-3	24-35-00-01	-005	01
6755006-5	73-10-00-01	-021	01
6755006-5	73-10-00-02	-020	01
6755006-6	73-10-00-01	-019	01
6755006-8	29-10-10-01	-092	01
6755006-9	29-10-10-01	-244	01
6755006-9	73-10-00-02	-012	01
6755007-18	26-20-30-01	-015	01
6755007-2	26-20-30-01	-014	01
6755007-20	26-20-30-01	-008	02
6755007-32	26-20-30-01	-003	01
6755007-48	26-20-15-01	-009	01
6755007-50	26-20-30-01	-001	01
6755007-51	26-20-30-01	-007	01

© Cessna Aircraft Company

PART NUMBER	CH SEC SUBJ FIG	ITEM	REQ	PART NUMBER	CH SEC SUBJ FIG	ITEM	REQ
6755007-55	26-20-30-01	-011	01	6756603-5	49-10-20-01	-002	01
6755007-56	26-20-30-01	-012	01	6756603-6	49-10-20-01	-008	01
6755007-59	26-20-30-01	-004	01	6756603-8	49-10-20-01	-006	01
6755007-60	26-20-30-01	-006	01	6756603-9	49-10-20-01	-010	01
6755007-61	26-20-30-01	-002	01	6756605-10	49-30-00-01	-011	01
6755008-17	24-20-00-01	-007	01	6756605-13	49-30-00-01	-009	01
6755008-17	24-30-00-01	-014	01	6756605-15	49-30-00-01	-013	01
6755008-18	24-20-00-01	-008	01	6756605-17	49-30-00-01	-077	01
6755008-18	24-30-00-01	-015	01	6756605-26	49-30-00-01	-014	01
6755008-35	24-20-00-01	-010	01	6756605-27	49-30-00-01	-075	01
6755008-35	24-30-00-01	-016	01	6756605-29	49-30-00-01	-077A	01
6755008-36	24-20-00-01	-011	01	6756605-30	49-30-00-01	-075A	01
6755008-36	24-30-00-01	-017	01	6756605-8	49-30-00-01	-002	01
6755009-1	11-N-23-02	-075	01	6756605-9	49-30-00-01	-010	01
6755009-2	11-N-23-02	-077	01	6758007-10	53-60-02-01	-016	01
6755009-3	11-N-23-02	-076	01	6758007-7	24-30-00-01	-029	02
6755009-4	11-N-23-02	-078	01	6758007-9	53-60-02-01	-015	01
6755010-10	71-10-00-01	-085	01	6758009-4	33-40-45-01	-004	01
6755010-7	71-10-00-01	-084	01	6758009-5	33-40-45-01	-005	01
6755010-8	71-10-00-01	-086	01	6758010-5	33-40-55-01	-006	02
6755010-9	71-10-00-01	-082	01	6758600-13	26-23-00-01	-011	01
6755106-6	77-30-00-01	-006	01	6758600-7	26-11-00-01	-006	01
6755106-7	77-30-00-01	-005	02	6758601-1	26-23-00-01	-014	01
6755300-17	80-10-00-01	-086	01	6760002-1	27-10-30-01	-013	02
6755300-18	80-10-00-01	-093	02	6760002-10	27-30-05-01	-226	02
6755300-19	80-10-00-01	-097	01	6760002-100	27-10-15-01	-156	01
6755300-20	80-10-00-01	-098	01	6760002-105	27-60-20-01	-166	01
6755300-30	80-10-00-01	-087	01	6760002-106	27-60-20-01	-167	01
6755300-34	80-10-00-01	-081	02	6760002-19	27-10-15-01	-075	01
6755301-1	80-10-00-01	-185	01	6760002-2	27-10-30-01	-014	02
6755305-7	36-13-00-01	-018	01	6760002-20	27-13-00-01	-001	01
6755401-15	36-10-20-04	-019	01	6760002-22	27-10-15-01	-081	01
6755401-16	36-10-20-04	-018	01	6760002-25	27-10-30-01	-001	01
6755401-19	36-10-20-04	-010	01	6760002-26	27-10-30-01	-002	01
6755401-20	36-10-20-04	-011	01	6760002-27	27-10-30-01	-003	01
6755401-21	36-10-20-04	-008	01	6760002-28	27-10-30-01	-004	01
6755401-22	36-10-20-04	-009	01	6760002-29	27-10-30-01	-375	02
6755401-31	36-10-20-04	-035	02	6760002-30	27-10-30-01	-376	02
6755401-36	36-10-20-04	-001	02	6760002-36	27-13-00-01	-228	01
6755402-27	30-20-00-02	-022	02	6760002-37	27-13-05-01	-003	01
6755402-27	36-10-20-02	-007	04	6760002-38	27-13-05-01	-004	01
6755402-39	36-10-20-02	-014	01	6760002-39	27-13-05-01	-001	01
6755402-40	36-10-20-02	-015	01	6760002-40	27-13-05-01	-002	01
6755402-42	36-10-20-02	-002	02	6760002-49	27-60-30-01	-075	01
6755412-1	36-10-20-02	-009	01	6760002-50	27-60-30-01	-076	01
6755412-13	36-10-20-02	-018	02	6760002-51	27-60-30-01	-077	01
6755412-15	36-10-20-02	-023	01	6760002-52	27-60-30-01	-078	01
6755412-16	36-10-20-02	-024	01	6760002-76	27-13-05-01	-086	02
6755412-2	36-10-20-02	-010	01	6760002-77	27-13-05-01	-085	02
6755451-15	30-20-00-02	-004	01	6760002-79	27-13-00-01	-227	01
6755451-17	30-20-00-02	-024	01	6760002-81	27-13-00-01	-006	01
6755451-18	30-20-00-02	-025	01	6760002-83	27-60-30-01	-001	01
6755451-19	30-20-00-02	-015	01	6760002-84	27-60-30-01	-002	01
6755451-20	30-20-00-02	-016	01	6760002-85	27-60-30-01	-003	01
6755451-27	30-20-00-02	-013	01	6760002-89	27-10-15-01	-080	01
6755451-28	30-20-00-02	-014	01	6760002-9	27-30-05-01	-225	02
6755451-5	30-20-00-02	-001	02	6760002-90	27-20-05-02	-001	01
6755501-5	80-10-00-01	-088	01	6760002-91	27-20-05-02	-002	01
6755501-6	80-10-00-01	-089	01	6760002-92	27-13-00-01	-007	01
6755600-3	49-80-00-01	-002	01	6760002-96	27-20-05-01	-075	01
6756603-10	49-10-20-01	-011	01	6760002-99	27-10-15-01	-155	01
6756603-4	49-10-20-01	-005	01	6760007-1	27-11-00-01	-225	01

© Cessna Aircraft Company

PART NUMBER	CH SEC SUBJ FIG	ITEM	REQ	PART NUMBER	CH SEC SUBJ FIG	ITEM	REQ
6760007-2	27-11-00-01	-242	01	6760160-2	27-11-00-01	-075	01
6760007-4	27-11-00-01	-244A	01	6760161-12	27-11-00-01	-243	01
6760007-5	27-11-00-01	-231	01	6760161-14	27-11-00-01	-245	02
6760020-10	27-60-20-01	-001	01	6760161-15	27-11-00-01	-235	01
6760020-11	27-60-20-01	-002	01	6760161-6	27-11-00-01	-175	01
6760020-12	27-30-05-01	-002	01	6760162-14	27-11-00-01	-106	01
6760020-13	27-30-05-01	-003	01	6760162-15	27-11-00-01	-157	01
6760020-14	27-30-05-01	-001	01	6760162-16	27-11-00-01	-170	01
6760020-15	27-30-05-01	-004	01	6760162-17	27-11-00-01	-163	01
6760020-19	27-11-00-01	-076	01	6760162-18	27-11-00-01	-236	01
6760020-2	27-10-15-01	-151	01	6760162-19	27-11-00-01	-246	02
6760020-24	22-10-10-02	-030	01	6760162-24	27-11-00-01	-154	01
6760020-25	22-10-10-02	-031	01	6760162-28	27-11-00-01	-172	01
6760020-26	22-10-10-01	-043	01	6760162-29	27-11-00-01	-099	01
6760020-27	27-10-15-01	-001	01	6760162-3	27-11-00-01	-100	01
6760020-28	27-10-15-01	-003	01	6760162-30	27-11-00-01	-093	01
6760020-29	27-10-15-01	-002	01	6760162-35	27-11-00-01	-150	01
6760020-3	27-20-05-01	-094	01	6760162-37	27-11-00-01	-104	01
6760020-30	27-10-15-01	-004	01	6760162-39	27-11-00-01	-249	01
6760020-32	27-10-15-01	-150	01	6760176-10	27-10-15-01	-100	01
6760020-37	27-20-05-01	-094B	01	6760176-11	27-10-15-01	-101	01
6760020-38	27-20-05-01	-100B	01	6760176-12	27-10-15-01	-102	01
6760020-39	27-20-05-01	-075B	01	6760176-13	27-10-15-01	-117	01
6760020-4	27-20-05-01	-100	01	6760176-14	27-10-15-01	-118	01
6760020-5	27-13-00-01	-084	01	6760176-15	27-10-15-01	-105	01
6760020-6	27-13-00-01	-085	01	6760176-16	27-10-15-01	-106	01
6760020-8	22-10-10-01	-038	01	6760176-3	27-10-15-01	-103	01
6760020-9	22-10-10-01	-044	01	6760176-4	27-10-15-01	-104	01
6760111-11	27-10-15-01	-235	01	6760176-5	27-10-15-01	-111	02
6760111-5	27-10-15-01	-227	01	6760176-6	27-10-15-01	-112	02
6760111-6	27-10-15-01	-231	01	6760176-7	27-10-15-01	-121	01
6760111-7	27-10-15-01	-225	01	6760176-8	27-10-15-01	-122	01
6760111-9	27-13-00-01	-019	01	6760176-9	27-10-15-01	-099	01
6760112-11	27-10-15-01	-245	01	6760201-19	27-60-00-01	-157	02
6760112-12	27-10-15-01	-240	01	6760201-20	27-60-00-01	-158	02
6760112-16	27-10-15-01	-246	01	6760201-22	27-60-00-01	-156	02
6760112-20	27-10-15-01	-241	01	6760202-25	27-13-05-01	-239	NP
6760112-3	27-13-00-01	-023	01	6760202-26	27-13-05-01	-240	NP
6760112-3	27-13-00-01	-080	03	6760202-28	27-13-05-01	-239A	02
6760112-6	27-13-00-01	-075	01	6760202-29	27-13-05-01	-240A	02
6760112-8	27-13-00-01	-076	01	6760203-1	27-13-05-01	-225	01
6760112-9	27-13-00-01	-020	01	6760203-2	27-13-05-01	-226	01
6760112-9	27-13-00-01	-077	01	6760203-6	27-13-05-01	-232	02
6760121-10	27-10-30-01	-455	01	6760203-7	27-13-05-01	-233	02
6760121-11	27-10-30-01	-532	02	6760203-8	27-13-05-01	-234	02
6760121-13	27-10-30-01	-457	01	6760212-10	27-13-00-01	-012	01
6760121-14	27-10-30-01	-458	01	6760212-3	27-13-00-01	-018	01
6760121-17	27-10-30-01	-450	01	6760212-4	27-13-00-01	-011	01
6760121-18	27-10-30-01	-451	01	6760212-5	27-13-00-01	-014	02
6760121-7	27-10-30-01	-456	02	6760212-8	27-10-15-01	-250	01
6760121-8	27-10-30-01	-387	02	6760212-9	27-13-00-01	-029	01
6760131-17	27-10-50-01	-081	02	6760232-10	27-12-00-01	-005	01
6760131-17	27-20-15-01	-004	01	6760232-12	27-12-00-01	-011	02
6760131-17	27-33-00-01	-174	02	6760232-17	27-12-00-01	-012	01
6760131-23	27-10-50-01	-090	01	6760232-18	27-12-00-01	-013	01
6760142-16	27-10-50-02	-027	01	6760232-21	27-12-00-01	-014	01
6760142-17	27-10-50-02	-025	01	6760232-24	27-12-00-01	-016	01
6760142-18	27-10-50-02	-028	01	6760232-35	27-12-00-01	-017	01
6760142-19	27-10-50-02	-026	01	6760232-4	27-12-00-01	-018	01
6760142-21	27-10-50-02	-032	01	6760232-45	27-12-00-01	-007	01
6760142-31	27-10-50-02	-034	01	6760232-48	27-12-00-01	-021	01
6760149-9	27-10-50-01	-233	01	6760232-49	27-12-00-01	-019	01

© Cessna Aircraft Company

PART NUMBER	CH SEC SUBJ FIG	ITEM	REQ	PART NUMBER	CH SEC SUBJ FIG	ITEM	REQ
6760232-52	27-12-00-01	-022	01	6760312-41	27-31-00-01	-012	02
6760232-53	27-12-00-01	-015	01	6760312-51	27-30-05-01	-164	02
6760232-55	27-12-00-01	-010	01	6760314-1	27-31-00-01	-033	02
6760232-9	27-12-00-01	-004	01	6760314-11	27-30-05-01	-008	01
6760233-1	27-12-00-01	-020	01	6760314-12	27-30-05-01	-009	01
6760260-10	27-12-00-01	-001	01	6760314-5	27-31-00-01	-016	02
6760270-12	27-60-00-01	-080	01	6760314-6	27-31-00-01	-015	02
6760270-16	27-60-00-01	-075	01	6760314-7	27-31-00-01	-021	01
6760270-21	27-60-00-01	-077	01	6760314-8	27-31-00-01	-022	01
6760270-29	27-60-20-01	-165	02	6760314-9	27-31-00-01	-032	01
6760270-42	27-60-00-01	-014	01	6760320-11	27-32-00-01	-023	02
6760270-44	27-60-00-01	-015	01	6760320-12	27-32-00-01	-001	02
6760270-49	27-60-20-01	-008	01	6760320-13	27-32-00-01	-012	02
6760270-51	27-60-00-01	-019	01	6760320-14	27-32-00-01	-012A	02
6760270-52	27-60-00-01	-019A	01	6760320-3	27-32-00-01	-075	01
6760270-8	27-60-00-01	-076	01	6760320-4	27-32-00-01	-076	01
6760271-12	27-60-00-01	-095	01	6760320-5	27-32-00-01	-082	01
6760271-13	27-60-00-01	-081	01	6760320-6	27-32-00-01	-083	01
6760271-9	27-60-00-01	-096	01	6760321-11	27-32-00-01	-088	02
6760272-3	27-60-00-01	-012	AR	6760321-7	27-32-00-01	-005	01
6760272-4	27-60-00-01	-013	AR	6760321-7	27-32-00-01	-156	01
6760276-4	27-10-15-01	-175	01	6760321-8	27-32-00-01	-006	01
6760276-4	27-60-20-01	-088	01	6760321-8	27-32-00-01	-157	01
6760276-5	27-10-15-01	-176	01	6760324-2	27-30-05-01	-103	01
6760276-5	27-60-20-01	-089	01	6760324-3	27-30-05-01	-104	01
6760278-7	27-60-00-01	-007	01	6760324-4	27-30-05-01	-105	01
6760279-5	27-60-00-01	-001	01	6760324-5	27-30-05-01	-100	01
6760281-18	27-60-00-01	-162	NP	6760324-6	27-30-05-01	-101	01
6760281-20	27-60-00-01	-169	NP	6760324-7	27-30-05-01	-102	01
6760281-27	27-60-00-01	-150	01	6760324-8	27-30-05-01	-014	01
6760281-28	27-60-00-01	-151	01	6760324-9	27-30-05-01	-013	01
6760281-29	27-60-00-01	-170	NP	6760332-10	27-33-00-01	-080	01
6760281-34	27-60-00-01	-171	NP	6760332-26	27-33-00-01	-004	01
6760281-35	27-60-00-01	-162A	02	6760332-29	27-33-00-01	-161	01
6760281-36	27-60-00-01	-169A	02	6760332-30	27-33-00-01	-163	01
6760281-37	27-60-00-01	-170A	01	6760332-31	27-33-00-01	-162	01
6760281-38	27-60-00-01	-171A	01	6760332-32	27-33-00-01	-164	01
6760286-57	27-60-00-01	-029	01	6760332-41	27-33-00-01	-001	01
6760287-3	27-60-00-01	-024	01	6760332-42	27-33-00-01	-002	01
6760305-1	27-36-00-01	-150	01	6760332-44	27-33-00-01	-095	02
6760305-2	27-36-00-01	-151	01	6760332-47	27-33-00-01	-014	NP
6760305-3	27-36-00-01	-173	01	6760332-48	27-33-00-01	-016	NP
6760305-4	27-36-00-01	-174	01	6760332-6	27-33-00-01	-003	01
6760306-1	27-36-00-01	-175	01	6760332-7	27-33-00-01	-085	01
6760306-2	27-36-00-01	-176	01	6760332-8	27-33-00-01	-090	01
6760306-3	27-36-00-01	-177	01	6760332-9	27-33-00-01	-075	01
6760306-4	27-36-00-01	-178	01	6760333-10	27-33-00-01	-011	01
6760306-5	27-36-00-01	-184	01	6760333-21	27-33-00-01	-005	01
6760306-6	27-36-00-01	-083	02	6760333-22	27-33-00-01	-006	01
6760307-11	27-36-00-01	-152	01	6760333-9	27-33-00-01	-010	01
6760307-12	27-36-00-01	-153	01	6760334-1	27-30-05-01	-015	01
6760307-13	27-36-00-01	-162	01	6760337-1	27-30-05-01	-082	01
6760307-17	27-36-00-01	-155	01	6760337-10	27-30-05-01	-081	01
6760307-18	27-36-00-01	-156	01	6760337-2	27-30-05-01	-086	01
6760307-5	27-36-00-01	-163	01	6760337-3	27-30-05-01	-084	01
6760307-6	27-36-00-01	-164	01	6760337-4	27-30-05-01	-085	01
6760307-9	27-36-00-01	-166	01	6760337-7	27-30-05-01	-088	01
6760310-3	27-31-00-01	-001	02	6760337-8	27-30-05-01	-087	01
6760312-17	27-31-00-01	-006	01	6760337-9	27-30-05-01	-083	01
6760312-25	27-31-00-01	-007	01	6760340-10	27-32-00-01	-166	02
6760312-35	27-30-05-01	-162	02	6760340-3	27-32-00-01	-150	02
6760312-36	27-30-05-01	-163	02	6760340-4	55-20-00-03	-005	04

© Cessna Aircraft Company

PART NUMBER	CH SEC SUBJ FIG	ITEM	REQ
6760341-1	27-32-00-01	-172	01
6760341-2	27-32-00-01	-173	01
6760341-3	27-32-00-01	-234	01
6760341-4	27-32-00-01	-231	AR
6760342-16	27-32-00-01	-238	01
6760342-22	27-32-00-01	-244	01
6760342-23	27-32-00-01	-225	02
6760342-24	27-32-00-01	-240	01
6760351-35	27-33-00-01	-156	01
6760351-36	27-33-00-01	-157	01
6760351-45	27-33-00-01	-150	01
6760351-46	27-33-00-01	-151	01
6760352-1	27-32-00-01	-094	02
6760352-2	27-32-00-01	-078	02
6760353-11	27-33-25-01	-007	01
6760353-12	27-33-25-01	-008	01
6760353-19	27-33-25-01	-001	NP
6760353-21	27-33-25-01	-001A	01
6760353-4	27-33-25-01	-009	01
6760353-5	27-33-25-01	-010	01
6760365-16	27-33-00-01	-100	04
6760365-17	27-20-00-01	-106	02
6760401-14	27-20-05-01	-236	01
6760401-15	27-20-05-01	-232	01
6760401-20	27-20-05-01	-237	01
6760401-21	27-20-05-01	-238	01
6760401-24	27-20-05-01	-239	01
6760401-25	27-20-05-01	-240	01
6760401-29	27-20-05-01	-235	01
6760401-30	27-20-05-01	-234	01
6760401-32	27-20-05-01	-231	01
6760401-33	27-20-05-01	-241	01
6760401-34	27-20-05-01	-242	01
6760401-35	27-20-05-01	-243	01
6760401-36	27-20-05-01	-244	01
6760402-10	53-24-00-01	-033	01
6760402-11	53-24-00-01	-037	01
6760403-8	27-20-05-01	-245	01
6760415-2	27-25-00-01	-125	01
6760418-11	27-20-05-01	-082	01
6760418-14	27-20-05-01	-083	01
6760418-3	27-20-05-01	-091	01
6760418-6	27-20-05-01	-080	01
6760420-2	27-20-00-01	-001	01
6760421-2	27-20-00-01	-097	01
6760421-35	27-20-00-01	-179	02
6760423-2	27-20-00-01	-005	01
6760424-1	55-30-00-08	-019	01
6760424-15	27-20-00-01	-168	01
6760424-18	27-20-00-01	-169	02
6760424-2	55-30-00-08	-024	01
6760424-37	27-20-00-01	-019	02
6760424-46	27-20-00-01	-163	01
6760424-47	27-20-00-01	-023	01
6760424-5	27-20-00-01	-174	02
6760424-59	55-30-00-04	-105	01
6760424-62	27-20-00-01	-167	01
6760424-64	27-20-00-01	-014	01
6760424-64	27-20-00-01	-025	01
6760424-65	27-20-00-01	-116	01
6760424-68	27-20-00-01	-006	01
6760424-69	27-20-00-01	-035	02
6760424-7	27-20-00-01	-155	02
6760425-2	27-24-05-01	-011	02
6760425-3	27-24-05-01	-007	01
6760426-1	27-20-15-01	-003	02
6760427-11	27-20-00-01	-008	01
6760427-13	27-20-00-01	-009	01
6760427-4	27-20-00-01	-030	01
6760427-6	27-20-00-01	-034	01
6760427-8	27-20-00-01	-033	01
6760427-9	27-20-00-01	-007	01
6760428-1	27-25-00-01	-001	01
6760428-2	27-25-00-01	-001A	01
6760434-15	27-25-00-01	-007	01
6760434-17	27-25-00-01	-075	01
6760434-18	27-24-15-01	-006	NP
6760434-19	27-24-15-01	-012	01
6760434-20	27-24-15-01	-006A	02
6760435-21	27-20-00-01	-075	01
6760436-1	27-25-00-01	-005	01
6760436-2	27-25-00-01	-006	01
6760446-10	27-20-00-01	-103	01
6760447-10	27-20-00-01	-036	01
6760455-1	27-21-00-01	-021	01
6760455-2	27-21-00-01	-022	01
6760455-3	27-20-00-01	-150	01
6760455-4	27-20-00-01	-151	01
6760465-18	27-21-00-01	-027	01
6760465-38	27-21-00-01	-018	02
6760465-39	27-21-00-01	-028	01
6760465-42	27-21-00-01	-004	02
6760465-43	27-21-00-01	-009	02
6760465-44	27-21-00-01	-003	01
6760465-45	27-21-00-01	-001	01
6760465-46	27-21-00-01	-002	01
6760465-47	55-30-00-08	-076	01
6760465-48	55-30-00-08	-075	01
6760520-12	27-36-00-01	-230	02
6760520-13	27-36-00-01	-232	01
6760520-14	27-36-00-01	-233	01
6760521-10	27-36-00-01	-041	01
6760521-11	27-36-00-01	-030	01
6760521-14	27-35-00-01	-084	02
6760521-20	27-11-00-01	-003	02
6760521-23	27-35-00-01	-016	01
6760521-29	27-11-00-01	-027	01
6760521-29	27-35-00-01	-025	01
6760521-37	27-36-00-01	-017	01
6760521-6	27-36-00-01	-044	02
6760522-10	27-11-00-01	-010	01
6760522-11	27-11-00-01	-011	01
6760522-13	27-35-00-01	-017	01
6760522-14	27-35-00-01	-013	01
6760522-15	27-35-00-01	-014	01
6760522-16	27-11-00-01	-001	01
6760522-6	27-11-00-01	-012	01
6760522-7	27-36-00-01	-011	01
6760522-8	27-36-00-01	-013	01
6760522-9	27-11-00-01	-009	01
6760527-2	27-36-00-01	-037	01
6760527-3	27-36-00-01	-035	01
6760527-4	27-36-00-01	-040	01
6760535-15	27-31-00-01	-025	01

© Cessna Aircraft Company

PART NUMBER	CH SEC SUBJ FIG	ITEM	REQ
6760535-16	27-31-00-01	-026	01
6760537-3	27-36-00-01	-226	01
6760537-5	27-36-00-01	-228	01
6760537-6	27-36-00-01	-229	01
6760537-7	27-36-00-01	-225	02
6760555-19	27-30-05-01	-158	01
6760555-21	27-30-05-01	-159	01
6760565-10	27-13-05-01	-031	01
6760565-7	27-13-05-01	-015	01
6760566-1	27-13-00-01	-248	01
6760566-10	27-13-00-01	-242	01
6760566-11	27-13-00-01	-243	01
6760566-3	27-13-00-01	-246	01
6760566-4	27-13-00-01	-247	01
6760566-5	27-13-00-01	-244	01
6760566-6	27-13-00-01	-245	01
6760566-7	27-13-00-01	-239	01
6760566-8	27-13-00-01	-240	01
6760566-9	27-13-00-01	-241	01
6760569-1	27-00-02-01	-178	01
6760569-10	27-00-02-01	-013	01
6760569-11	27-00-02-01	-044	01
6760569-12	27-00-02-01	-040	01
6760569-13	27-20-05-02	-010	04
6760569-14	27-00-02-01	-085	01
6760569-15	27-00-02-01	-238	01
6760569-16	27-00-02-01	-096	01
6760569-17	27-00-02-01	-100	01
6760569-18	27-00-02-01	-183	01
6760569-19	27-00-02-01	-101	01
6760569-2	27-00-02-01	-177	01
6760569-20	27-00-02-01	-110	01
6760569-21	27-00-02-01	-075	01
6760569-22	27-00-02-01	-114	01
6760569-23	27-00-02-01	-120	01
6760569-24	27-00-02-01	-151	01
6760569-24	27-20-05-02	-014	01
6760569-25	27-00-02-01	-150	01
6760569-25	27-20-05-02	-018	01
6760569-26	27-00-02-01	-168	01
6760569-27	27-00-02-01	-164	01
6760569-28	27-00-02-01	-234	01
6760569-29	27-00-02-01	-252	01
6760569-3	27-00-02-01	-266	01
6760569-30	27-00-02-01	-267	04
6760569-30	27-20-05-02	-022	02
6760569-31	27-00-02-01	-001	01
6760569-32	27-00-02-01	-109	01
6760569-4	27-00-02-01	-256	01
6760569-5	27-00-02-01	-179	01
6760569-6	27-00-02-01	-039	01
6760569-7	27-00-02-01	-012	01
6760569-8	27-00-02-01	-011	01
6760569-9	27-00-02-01	-014	01
6760570-6	27-30-05-01	-236	01
6760570-7	27-20-05-02	-095	01
6760570-7	27-30-05-01	-237	01
6760571-10	27-30-05-01	-269	01
6760571-11	27-30-05-01	-265	01
6760571-12	27-30-05-01	-264	01
6760571-13	27-30-05-01	-263	01
6760571-14	27-30-05-01	-266	01
6760571-15	27-30-05-01	-270	01
6760571-16	27-30-05-01	-271	01
6760571-17	27-30-05-01	-272	01
6760571-18	27-30-05-01	-267	01
6760571-19	27-30-05-01	-268	01
6760571-20	27-30-05-01	-262	01
6760571-21	27-30-05-01	-261	01
6760571-24	27-30-05-01	-283	04
6760571-25	27-30-05-01	-281	01
6760571-26	27-30-05-01	-282	01
6760571-27	27-30-05-01	-284	02
6760571-29	27-30-05-01	-244	01
6760571-30	27-30-05-01	-251	01
6760571-31	27-30-05-01	-246	01
6760571-32	27-30-05-01	-252	01
6760571-33	27-30-05-01	-250	01
6760571-34	27-30-05-01	-238	01
6760571-35	27-20-05-02	-096	01
6760571-35	27-30-05-01	-239	01
6760571-36	27-30-05-01	-245	01
6760571-9	27-30-05-01	-247	01
6760575-2	22-10-10-02	-032	02
6760575-3	22-10-10-02	-033	02
6760575-5	22-10-10-02	-025	01
6760576-20	55-30-00-04	-116	01
6760579-1	27-10-30-01	-303	12
6760579-3	27-10-30-01	-306	24
6760579-4	27-10-30-01	-225	02
6760579-5	27-10-30-01	-315	01
6760579-6	27-10-30-01	-316	01
6760579-7	27-10-30-01	-231	02
6760581-11	22-10-10-01	-045	02
6760581-22	22-10-10-01	-034	02
6760581-23	22-10-10-01	-029	01
6760581-24	22-10-10-01	-030	01
6760583-4	27-13-00-01	-158	01
6760583-5	27-13-00-01	-170	01
6760584-10	27-13-00-01	-172	01
6760584-11	27-13-00-01	-176	01
6760584-12	27-13-00-01	-175	01
6760584-13	27-13-00-01	-174	01
6760584-14	27-13-00-01	-173	01
6760584-15	27-13-00-01	-177	01
6760584-16	27-13-00-01	-178	01
6760584-18	27-13-00-01	-159	01
6760584-19	27-13-00-01	-163	01
6760584-3	27-13-00-01	-161	01
6760584-4	27-13-00-01	-160	01
6760584-6	27-13-00-01	-162	01
6760584-8	27-13-00-01	-169	01
6760584-9	27-13-00-01	-171	01
6760589-10	22-10-10-01	-016	01
6760589-2	22-10-10-01	-009	02
6760589-3	22-10-10-01	-018	01
6760589-4	22-10-10-01	-017	01
6760589-5	22-10-10-01	-012	01
6760589-6	22-10-10-01	-013	01
6760589-7	22-10-10-01	-006	01
6760589-8	22-10-10-01	-005	01
6760589-9	22-10-10-01	-026	01
6760591-13	27-00-02-01	-028	01
6760591-14	27-00-02-01	-029	01

© Cessna Aircraft Company

PART NUMBER	CH SEC SUBJ FIG	ITEM	REQ	PART NUMBER	CH SEC SUBJ FIG	ITEM	REQ
6760591-16	27-00-02-01	-089	01	6760705-1	27-10-30-01	-240	01
6760591-19	27-00-02-01	-260	01	6760705-13	27-10-30-01	-402	02
6760591-6	27-00-02-01	-090	01	6760705-14	27-10-30-01	-406	02
6760591-8	27-00-02-01	-157	01	6760705-15	27-10-30-01	-400	02
6760592-25	27-00-02-01	-037	01	6760705-16	27-10-30-01	-412	02
6760592-25	27-00-02-01	-079	03	6760705-19	27-10-30-01	-395	01
6760592-26	27-00-02-01	-038	01	6760705-2	27-10-30-01	-241	01
6760592-26	27-00-02-01	-080	04	6760705-20	27-10-30-01	-396	01
6760592-34	27-00-02-01	-163	01	6760705-25	27-10-30-01	-525	01
6760593-2	27-20-05-01	-250	01	6760705-26	27-10-30-01	-526	01
6760593-5	27-20-05-01	-251	02	6760705-29	27-10-30-01	-465	01
6760595-10	55-30-00-04	-095	01	6760705-30	27-10-30-01	-466	01
6760595-11	55-30-00-04	-094	01	6760705-41	27-10-30-01	-229	01
6760595-12	55-30-00-04	-115	01	6760705-42	27-10-30-01	-230	01
6760595-13	55-30-00-04	-113	01	6760705-45	27-10-30-01	-235	01
6760595-18	55-30-00-04	-096	02	6760705-46	27-10-30-01	-236	01
6760595-19	55-30-00-04	-098	01	6760705-47	27-10-30-01	-242	02
6760595-20	55-30-00-04	-099	02	6760705-47	27-10-30-01	-246	02
6760595-21	55-30-00-04	-097	01	6760705-48	27-10-30-01	-243	02
6760595-23	55-30-00-04	-112	01	6760705-48	27-10-30-01	-247	02
6760595-25	22-10-10-02	-006	01	6760705-49	27-10-30-01	-478	02
6760595-26	22-10-10-02	-005	01	6760705-53	27-10-30-01	-530	01
6760595-27	22-10-10-02	-011	02	6760705-57	27-10-30-01	-313	01
6760595-28	55-30-00-04	-114	01	6760705-58	27-10-30-01	-314	01
6760595-29	22-10-10-02	-039	01	6760705-59	27-10-30-01	-244	01
6760595-3	22-10-10-02	-007	01	6760705-60	27-10-30-01	-245	01
6760595-6	22-10-10-02	-010	01	6760705-63	27-10-30-01	-398	01
6760595-7	55-30-00-04	-093	01	6760705-64	27-10-30-01	-399	01
6760595-8	55-30-00-04	-092	01	6760705-65	27-10-30-01	-407	01
6760595-9	55-30-00-04	-090	01	6760705-66	27-10-30-01	-408	01
6760596-1	27-00-02-01	-091	01	6760706-1	27-10-30-01	-474	01
6760596-1	27-00-02-01	-105	01	6760706-2	27-10-30-01	-475	01
6760596-1	27-00-02-01	-173	01	6760706-7	27-10-30-01	-470	01
6760596-10	27-00-02-01	-230	01	6760706-8	27-10-30-01	-471	01
6760596-11	27-00-02-01	-225	01	6760710-1	27-10-30-01	-155	01
6760596-2	27-00-02-01	-007	01	6760710-10	27-10-30-01	-169	01
6760596-2	27-00-02-01	-024	01	6760710-11	27-10-30-01	-162	01
6760596-2	27-00-02-01	-092	02	6760710-12	27-10-30-01	-163	01
6760596-2	27-00-02-01	-172	01	6760710-13	27-10-30-01	-160	01
6760596-2	27-00-02-01	-244	01	6760710-14	27-10-30-01	-161	01
6760596-3	27-00-02-01	-032	01	6760710-15	27-10-30-01	-173	01
6760596-3	27-00-02-01	-158	01	6760710-16	27-10-30-01	-174	01
6760596-4	27-00-02-01	-033	01	6760710-17	27-10-30-01	-089	01
6760596-4	27-00-02-01	-162	01	6760710-18	27-10-30-01	-090	01
6760596-5	27-00-02-01	-248	01	6760710-19	27-10-30-01	-091	01
6760596-6	27-00-02-01	-006	01	6760710-2	27-10-30-01	-156	01
6760596-6	27-00-02-01	-023	01	6760710-20	27-10-30-01	-092	01
6760596-8	27-00-02-01	-262	01	6760710-21	27-10-30-01	-093	01
6760596-9	27-00-02-01	-261	01	6760710-22	27-10-30-01	-164	NP
6760597-20	27-00-02-01	-019	01	6760710-3	27-10-30-01	-157	01
6760599-1	27-20-05-01	-255	01	6760710-4	27-10-30-01	-158	01
6760599-2	27-20-05-01	-268	01	6760710-5	27-10-30-01	-159	01
6760599-3	27-20-05-01	-267	01	6760710-6	27-10-30-01	-172	01
6760599-4	27-20-05-01	-259	01	6760710-8	27-10-30-01	-165	01
6760599-5	27-20-05-01	-260	01	6760710-9	27-10-30-01	-166	01
6760599-6	27-20-05-01	-261	02	6760720-11	27-13-05-01	-182	01
6760599-7	27-20-05-01	-262	02	6760720-12	27-13-05-01	-183	01
6760600-10	32-51-00-01	-029	02	6760720-17	27-13-05-01	-103	01
6760611-19	32-51-00-01	-031	02	6760720-17	27-60-30-01	-110	01
6760611-31	32-51-00-01	-033	01	6760720-18	27-13-05-01	-104	01
6760611-32	32-51-00-01	-034	01	6760720-18	27-60-30-01	-111	01
6760621-6	32-51-00-01	-013	02	6760720-27	27-13-05-01	-080	01

© Cessna Aircraft Company

PART NUMBER	CH SEC SUBJ FIG	ITEM	REQ
6760720-27	27-60-30-01	-101	01
6760720-28	27-13-05-01	-081	01
6760720-28	27-60-30-01	-102	01
6760720-31	27-13-05-01	-083	01
6760720-31	27-60-30-01	-104	01
6760720-32	27-13-05-01	-084	01
6760720-32	27-60-30-01	-105	01
6760720-33	27-13-05-01	-163	01
6760720-33	27-60-30-01	-112	01
6760720-34	27-13-05-01	-164	01
6760720-34	27-60-30-01	-113	01
6760720-5	27-13-05-01	-161	01
6760720-5	27-60-30-01	-114	01
6760720-6	27-13-05-01	-162	01
6760720-6	27-60-30-01	-115	01
6760720-9	27-13-05-01	-105	02
6760720-9	27-60-30-01	-109	02
6760731-2	27-10-50-02	-171	02
6760731-4	27-10-50-02	-076	01
6760731-4	27-10-50-02	-170	02
6760731-6	27-10-50-01	-089	01
6760731-9	27-10-50-02	-077	01
6760741-10	27-10-50-02	-159	01
6760741-12	27-10-50-02	-090	01
6760741-15	27-10-50-02	-165	01
6760741-16	27-10-50-02	-075	01
6760741-2	27-10-50-02	-164	01
6760741-5	27-10-50-01	-098	01
6760741-6	27-10-50-02	-085	01
6760741-8	27-10-50-02	-158	02
6760742-10	27-10-50-02	-018	01
6760742-15	27-10-50-01	-095	01
6760742-16	27-10-50-01	-113	01
6760742-17	27-10-50-01	-114	01
6760742-19	27-10-50-02	-192	01
6760742-6	27-10-50-02	-019	01
6760742-8	27-10-50-02	-184	01
6760742-9	27-10-50-02	-189	01
6760743-10	27-10-50-02	-001	01
6760743-11	27-10-50-02	-150	01
6760743-12	27-10-50-02	-096	01
6760743-2	27-10-50-02	-020	01
6760743-3	27-10-50-02	-106	01
6760743-5	27-10-50-02	-107	01
6760743-9	27-10-50-02	-180	01
6760745-6	27-10-50-02	-012	01
6760745-7	27-10-50-02	-006	01
6760751-12	27-10-50-01	-017	02
6760751-14	27-10-50-01	-026	01
6760751-15	27-10-50-01	-027	01
6760751-17	27-10-50-01	-029	01
6760751-18	27-10-50-01	-024	01
6760751-19	27-10-50-01	-015	02
6760751-20	27-10-50-01	-016	02
6760751-21	27-10-50-01	-051	01
6760751-22	27-10-50-01	-037	02
6760751-3	27-10-50-01	-001	01
6760751-4	27-10-50-01	-005	01
6760751-5	27-10-50-01	-006	01
6760751-6	27-10-50-01	-010	01
6760751-8	27-10-50-01	-039	02
6760751-9	27-10-50-01	-040	02
6760752-1	27-10-50-01	-300	01
6760752-13	27-10-50-01	-336	02
6760752-14	27-10-50-01	-330	01
6760752-16	27-10-50-01	-318	01
6760752-17	27-10-50-01	-325	01
6760752-18	27-10-50-01	-308	01
6760752-19	27-10-50-01	-313	01
6760752-20	27-10-50-01	-240	01
6760752-4	27-10-50-01	-248	01
6760752-6	27-10-50-01	-250	01
6760752-9	27-10-50-01	-314	01
6760753-1	27-10-50-01	-156	01
6760753-11	27-10-50-01	-190	01
6760753-13	27-10-50-01	-187	01
6760753-15	27-10-50-01	-197	02
6760753-18	27-10-50-01	-205	02
6760753-2	27-10-50-01	-157	01
6760753-21	27-10-50-01	-215	01
6760753-22	27-10-50-01	-214	01
6760753-25	27-10-50-01	-212	AR
6760753-26	27-10-50-01	-213	AR
6760753-27	27-10-50-01	-179	01
6760753-28	27-10-50-01	-174	01
6760753-5	27-10-50-01	-164	01
6760753-7	27-10-50-01	-183	01
6760754-1	27-10-50-01	-047	04
6760761-1	27-10-50-02	-157	01
6760761-10	27-10-50-02	-154	01
6760761-2	27-10-50-02	-102	01
6760762-1	27-10-50-01	-341	01
6760762-2	27-10-50-01	-340	01
6760775-2	27-10-15-01	-174	01
6760776-1	27-10-15-01	-087	01
6760776-2	27-10-15-01	-092	01
6760776-3	27-10-15-01	-088	01
6760776-4	27-10-15-01	-086	01
6760776-5	27-10-15-01	-087A	01
6760776-6	27-10-15-01	-092A	01
6762753-1	27-50-00-01	-466	02
6762761-1	27-50-00-01	-093	01
6762761-2	27-50-00-01	-094	01
6762761-3	27-50-00-01	-103	01
6762761-4	27-50-00-01	-104	01
6762761-7	27-50-00-01	-099	01
6762761-8	27-50-00-01	-100	01
6763503-3	27-80-10-01	-013	08
6763504-1	27-80-10-01	-019	02
6763504-2	27-80-10-01	-021	02
6763504-3	27-80-10-01	-020	02
6763504-4	27-80-10-01	-022	02
6763505-5	27-80-10-01	-006	08
6763506-1	27-80-10-01	-036	02
6763506-10	27-80-10-01	-036A	02
6763506-3	27-80-10-01	-041	01
6763506-4	27-80-10-01	-042	01
6763507-1	27-80-25-01	-007	01
6763507-2	27-80-25-01	-008	01
6764000-2	32-43-00-01	-002	04
6764000-3	32-43-00-01	-007	01
6764000-4	32-43-00-01	-008	01
6764000-5	32-43-00-01	-009	01
6764000-6	32-43-00-01	-010	01

© Cessna Aircraft Company

PART NUMBER	CH SEC SUBJ FIG	ITEM	REQ	PART NUMBER	CH SEC SUBJ FIG	ITEM	REQ
6764002-10	32-43-00-01	-017	01	6791129-5	25-10-01-03	-005	01
6764002-4	32-43-00-01	-025	01	6791129-6	25-10-01-03	-006	01
6764002-6	32-43-00-01	-018	01	6791129-7	25-10-01-03	-007	01
6764002-9	32-43-00-01	-019	01	6791129-9	25-10-01-03	-001	01
6764004-1	32-43-00-01	-161	02	6791169-10	35-10-20-01	-046	01
6764004-12	32-43-00-01	-087	01	6791169-12	35-10-20-01	-078	01
6764004-16	32-43-00-01	-026	02	6791169-13	35-10-20-01	-079	01
6764004-23	32-43-00-01	-150	02	6791169-30	35-10-20-01	-175	01
6764004-24	32-43-00-01	-031	04	6791169-35	35-10-20-01	-104	01
6764004-25	32-43-00-01	-035	08	6791169-8	35-10-20-01	-159	01
6764004-27	32-43-00-01	-039	02	6791253-3	21-29-00-01	-001	08
6764004-3	32-43-00-01	-154	02	6791253-3	53-15-00-02	-076	04
6764004-5	32-43-00-01	-094	02	6791253-3	53-15-00-02	-170	04
6764004-7	32-43-10-01	-004	01	6791253-4	53-15-00-02	-033	01
6764005-2	32-43-00-01	-079	03	6791281-2	53-38-00-01	-017	01
6764005-4	32-43-00-01	-002B	04	6791281-3	53-38-00-01	-021	01
6765760-1	27-50-00-02	-001	01	6791291-3	56-15-00-01	-005	01
6765761-1	27-50-00-02	-003	01	6791291-4	56-15-00-01	-006	01
6765761-15	27-50-00-02	-004	01	6792052-1	57-20-00-08	-326	01
6768150-21	24-60-25-01	-002	01	6792052-2	57-20-00-08	-327	01
6768150-21	24-60-25-01	-015	01	6792052-3	57-20-00-08	-334	01
6768151-5	24-60-25-01	-026	01	6792052-4	57-20-00-08	-335	01
6768152-1	24-60-25-01	-006	01	6792052-5	57-20-00-08	-324	01
6768152-1	24-60-25-01	-019	01	6792052-6	57-20-00-08	-325	01
6768153-5	24-60-25-01	-010	01	6792054-12	27-11-20-01	-033	01
6768153-5	24-60-25-01	-024	01	6792054-14	27-11-20-01	-023	01
6768154-6	24-60-35-01	-009	01	6792054-15	27-11-20-01	-014	01
6768154-6	24-60-35-01	-025	01	6792054-18	27-11-20-01	-009	NP
6768155-5	24-60-25-01	-003	NP	6792054-23	27-11-20-01	-001	02
6768155-5	24-60-25-01	-016	NP	6792054-26	27-11-20-01	-009A	01
6768155-6	24-60-25-01	-003A	01	6792054-3	27-11-20-01	-005	01
6768155-6	24-60-25-01	-016A	01	6792072-3	27-50-00-01	-111	02
6768156-5	24-60-35-01	-005	01	6792072-4	27-50-00-01	-112	02
6768156-5	24-60-35-01	-021	01	6792072-5	27-50-00-01	-113	02
6768157-1	24-60-35-01	-008	01	6793033-1	55-20-00-01	-029	01
6768157-1	24-60-35-01	-024	01	6793033-10	55-20-00-01	-039	01
6768158-1	24-60-25-01	-004	01	6793033-14	55-20-00-01	-040	01
6768158-1	24-60-25-01	-017	01	6793033-15	55-20-00-01	-009	01
6768162-5	24-60-25-01	-012	01	6793033-16	55-20-00-01	-010	01
6768162-5	24-60-35-01	-011	01	6793033-17	55-20-00-01	-077	01
6768166-7	24-60-35-01	-006	01	6793033-18	55-20-00-01	-078	01
6768166-7	24-60-35-01	-022	01	6793033-19	55-20-00-01	-075	01
6768167-5	24-60-35-01	-010	01	6793033-2	55-20-00-01	-030	01
6768170-5	24-60-25-01	-025	01	6793033-20	55-20-00-01	-076	01
6768172-1	35-20-15-01	-011	01	6793033-25	55-20-00-01	-081	01
677-A0002	23-15-00-01	-087	01	6793033-26	55-20-00-01	-082	01
6778000-1	31-20-00-01	-009	01	6793033-27	55-20-00-01	-079	01
6781005-1	25-25-00-01	-011	01	6793033-28	55-20-00-01	-080	01
6781005-2	25-25-00-01	-012	01	6793033-33	55-20-00-01	-041	03
6781005-3	25-25-00-01	-013	01	6793033-34	55-20-00-01	-083	01
6790067-2	31-37-00-01	-003	01	6793033-35	55-20-00-01	-011	02
6790334-1	27-33-00-01	-015	01	6793033-36	55-20-00-01	-012	02
6790334-2	27-33-00-01	-017	01	6793033-7	55-20-00-01	-032	AR
6791118-5	53-10-12-01	-001	01	6793033-8	55-20-00-01	-008	01
6791118-6	53-10-12-01	-002	01	6793033-9	55-20-00-01	-038	01
6791118-7	53-10-12-01	-004	01	6793035-1	55-10-00-01	-158	01
6791118-8	53-10-12-01	-005	08	6793035-10	55-10-00-01	-246	02
6791125-17	52-10-31-01	-025	01	6793035-11	55-10-00-01	-248	01
6791125-18	52-10-31-01	-013	01	6793035-12	55-10-00-01	-250	01
6791129-2	25-10-01-03	-002	01	6793035-13	55-10-00-01	-254	01
6791129-3	25-10-01-03	-003	01	6793035-14	55-10-00-01	-252	01
6791129-4	25-10-01-03	-004	01	6793035-15	55-10-00-02	-399	01

© Cessna Aircraft Company

PART NUMBER	CH SEC SUBJ FIG	ITEM	REQ	PART NUMBER	CH SEC SUBJ FIG	ITEM	REQ
6793035-16	55-10-00-02	-400	01	6911091-18	53-20-00-03	-012	01
6793035-2	55-10-00-01	-161	01	6911091-19	53-20-00-03	-015	02
6793035-5	55-10-00-01	-159	01	6911092-3	53-20-00-05	-001	01
6793035-6	55-10-00-01	-162	01	6911092-4	53-20-00-05	-002	01
6793041-3	55-10-00-02	-419	02	6911092-5	53-20-00-05	-012	01
6793041-4	55-10-00-02	-280	01	6911092-6	53-20-00-05	-013	01
6793041-4	55-10-00-02	-364	02	6911092-7	53-20-00-05	-010	01
6796570-4	27-25-00-02	-006	01	6911092-8	53-20-00-05	-011	01
6796570-5	27-25-00-02	-005	02	6911092-9	53-20-00-05	-007	02
6796570-6	27-25-00-02	-007	01	6911095-13	53-20-00-08	-037	01
68-1032	32-41-05-01	-008	01	6911095-14	53-20-00-08	-038	01
68-1157	32-41-05-01	-015	02	6911095-15	53-20-00-08	-013	01
68-450	32-41-05-01	-013	01	6911095-17	53-20-00-08	-039	01
68-5470127-00	33-40-25-01	-011	01	6911095-18	53-20-00-08	-040	01
68-7170340-00	33-30-20-01	-005	01	6911095-19	53-20-00-08	-043	02
6911010-3	53-20-01-01	-089	01	6911095-2	53-20-00-08	-034	02
6911010-4	53-20-01-01	-090	01	6911095-20	53-20-00-08	-044	02
6911015-17	53-20-06-01	-013	01	6911095-6	53-20-00-08	-014	01
6911015-18	53-20-06-01	-014	01	6911159-1	53-20-00-12	-031	02
6911015-37	53-20-06-01	-012	01	6911159-1	53-22-00-01	-010	01
6911015-38	53-20-06-01	-011	01	6911159-1	53-22-00-01	-079	01
6911015-61	53-20-06-01	-030	01	6911159-1	53-22-00-02	-006	02
6911015-62	53-20-06-01	-031	01	6911159-1	53-22-00-02	-080	02
6911015-63	53-20-06-01	-033	01	6911159-1	53-22-00-03	-010	02
6911015-64	53-20-06-01	-034	01	6911159-1	53-22-00-03	-081	02
6911028-25	53-20-02-06	-002	01	6911159-1	53-22-00-04	-008	02
6911028-59	53-20-02-06	-015	01	6911159-1	53-22-00-04	-079	02
6911030-17	53-20-01-05	-038	01	6911159-1	53-22-00-05	-005	02
6911030-18	53-20-01-05	-034	01	6911159-1	53-22-00-07	-018	02
6911030-18	53-30-04-01	-080	01	6911159-1	53-22-00-07	-088	02
6911043-11	53-20-05-01	-005	01	6911159-1	53-22-00-07	-164	02
6911043-13	53-20-05-01	-009	01	6911159-1	53-22-00-08	-015	02
6911043-35	53-20-05-01	-011	01	6911159-1	53-22-00-08	-091	02
6911043-36	53-20-05-01	-012	01	6911159-1	53-22-00-18	-010	02
6911065-19	53-20-00-04	-001	01	6911159-1	53-22-00-19	-011	02
6911065-20	53-20-00-04	-002	01	6911159-2	53-20-00-12	-032	02
6911070-10	53-20-00-06	-089	01	6911159-2	53-22-00-01	-080	02
6911070-13	53-20-00-06	-001	01	6911159-2	53-22-00-02	-007	02
6911070-14	53-20-00-06	-002	01	6911159-2	53-22-00-02	-081	02
6911070-15	53-20-00-06	-005	01	6911159-2	53-22-00-03	-011	02
6911070-16	53-20-00-06	-006	01	6911159-2	53-22-00-03	-082	02
6911070-17	53-20-00-06	-007	01	6911159-2	53-22-00-04	-009	02
6911070-18	53-20-00-06	-008	01	6911159-2	53-22-00-04	-080	02
6911070-5	53-20-00-06	-097	01	6911159-2	53-22-00-05	-006	02
6911070-6	53-20-00-06	-098	01	6911159-2	53-22-00-07	-019	02
6911070-7	53-20-00-06	-083	01	6911159-2	53-22-00-07	-089	02
6911070-8	53-20-00-06	-088	01	6911159-2	53-22-00-07	-165	02
6911070-9	53-20-00-06	-084	01	6911159-2	53-22-00-08	-016	02
6911075-3	53-20-00-07	-001	01	6911159-2	53-22-00-08	-092	02
6911075-4	53-20-00-07	-002	01	6911159-2	53-22-00-18	-011	02
6911075-5	53-20-00-07	-007	01	6911159-2	53-22-00-19	-012	02
6911075-6	53-20-00-07	-008	01	6911177-1	53-30-06-01	-174	01
6911075-7	53-20-00-07	-009	01	6911177-32	53-30-06-02	-112	01
6911075-8	53-20-00-07	-010	01	6911177-57	53-30-06-01	-175	01
6911089-4	53-20-00-02	-042	01	6911177-58	53-30-06-02	-103	01
6911089-6	53-20-00-02	-008	01	6911178-37	53-30-06-03	-004	01
6911089-9	53-20-00-02	-009	01	6911178-37	53-30-06-04	-002	01
6911091-13	53-20-00-03	-001	01	6911178-38	53-30-06-03	-003	01
6911091-14	53-20-00-03	-002	01	6911178-38	53-30-06-04	-003	01
6911091-15	53-20-00-03	-013	01	6911437-1	53-20-02-04	-013	01
6911091-16	53-20-00-03	-014	01	6911437-1	56-10-00-01	-008	01
6911091-17	53-20-00-03	-011	01	6911437-2	53-20-02-04	-015	01

© Cessna Aircraft Company

PART NUMBER	CH SEC SUBJ FIG	ITEM	REQ	PART NUMBER	CH SEC SUBJ FIG	ITEM	REQ
6911437-2	56-10-00-01	-009	01	6918111-8	30-43-05-01	-008	01
6912206-40	24-60-00-01	-040	NP	6918236-1	31-35-00-01	-001	01
6912206-58	24-60-00-01	-039	06	6918236-20	31-35-00-01	-001A	01
6912206-73	24-60-00-01	-040A	06	6918303-9	24-60-00-01	-001	01
6913107-5	53-10-00-02	-002A	01	6918352-16	24-60-10-01	-016	02
6913107-7	53-10-00-02	-004A	01	6918352-16	24-60-10-02	-016	02
6913108-2	53-10-00-02	-075A	01	6918352-18	24-60-10-01	-017	01
6913108-4	53-10-00-02	-078A	01	6918352-18	24-60-10-02	-017	01
6913109-1	53-10-00-02	-006A	01	6918352-20	24-60-10-01	-021	01
6913109-2	53-10-00-02	-080A	01	6918352-20	24-60-10-02	-021	01
6913123-1	53-10-00-02	-016A	01	6918352-27	24-60-10-01	-015	02
6913123-11	53-10-00-02	-007A	01	6918352-27	24-60-10-02	-015	02
6913123-12	53-10-00-02	-081A	01	6918352-29	24-60-10-01	-023	01
6913123-13	53-10-00-02	-009A	01	6918352-29	24-60-10-02	-023	01
6913123-14	53-10-00-02	-083A	01	6918352-30	24-60-10-01	-026	01
6913123-15	53-10-00-02	-010A	01	6918352-30	24-60-10-02	-026	01
6913123-16	53-10-00-02	-084A	01	6918352-31	24-60-10-01	-024	01
6913123-17	53-10-00-02	-011A	01	6918352-31	24-60-10-02	-024	01
6913123-18	53-10-00-02	-085A	01	6918352-32	24-60-10-01	-025	01
6913123-19	53-10-00-02	-012A	01	6918352-32	24-60-10-02	-025	01
6913123-2	53-10-00-02	-092A	01	6918354-37	24-60-10-01	-330	01
6913123-20	53-10-00-02	-086A	01	6918354-38	24-60-10-02	-329	01
6913123-21	53-10-00-02	-013A	01	6918354-4	24-60-10-01	-329	01
6913123-22	53-10-00-02	-087A	01	6918354-4	24-60-10-02	-328	01
6913123-23	53-10-00-02	-014A	01	6918354-41	24-60-10-01	-331	01
6913123-24	53-10-00-02	-088A	01	6918354-42	24-60-10-02	-330	01
6913123-25	53-10-00-02	-015A	01	6918354-45	24-60-10-01	-332	01
6913123-26	53-10-00-02	-089A	01	6918354-46	24-60-10-02	-331	01
6913123-28	53-10-00-02	-090A	01	6918358-1	24-60-15-01	-012	07
6913123-3	53-10-00-02	-017A	01	6918358-2	24-60-10-01	-036	01
6913123-30	53-10-00-02	-091A	01	6918358-2	24-60-10-02	-036	01
6913123-31	53-10-00-02	-008A	01	6918358-2	24-60-10-02	-037	01
6913123-32	53-10-00-02	-082A	01	6918358-2	24-60-15-01	-086	01
6913123-4	53-10-00-02	-093A	01	6918358-2	24-60-15-01	-087	01
6913123-5	53-10-00-02	-018A	01	6918675-1	24-60-35-01	-007	01
6913123-6	53-10-00-02	-094A	01	6918675-1	24-60-35-01	-023	01
6913123-7	53-10-00-02	-019A	01	6918701-7	27-50-00-02	-014	01
6913123-9	53-10-00-02	-021A	01	6918704-5	27-50-00-02	-015	01
6913145-1	76-10-00-01	-005	01	6918705-4	27-50-00-02	-016	01
6914013-20	34-10-00-02	-095	02	6924200-4	27-13-35-01	-008	01
6914013-20	34-10-00-02	-237	04	6924200-4	27-60-40-01	-009	01
6914020-10	30-40-00-01A	-010	NP	6940002-1	11-N-27-01	-076	01
6914020-3	30-40-00-01A	-021	01	6940002-8	11-N-27-01	-077	01
6914020-5	30-40-00-01A	-044	01	6940002-8	53-12-00-02	-016	01
6914020-6	30-40-00-01A	-005	01	6942700-10	32-35-00-02	-001A	01
6914020-8	30-40-00-01A	-018	01	6942700-3	32-35-00-02	-002	01
6914030-25	34-10-00-02	-007	01	6942700-8	32-35-00-02	-002A	01
6914030-26	34-10-00-02	-008	01	6947030-18	32-30-00-03	-003	06
6914030-31	34-10-00-01	-029	01	69494J439	21-50-20-01	-010	01
6914030-45	34-10-00-02	-165	01	69494J908	21-50-00-01	-006	01
6914030-67	34-10-00-01	-007	02	69494J908	21-50-00-01	-008	01
6917010-42	32-51-00-01	-093	04	6960005-20	27-20-05-01	-002	02
6917070-21	30-40-00-01A	-036	01	6960106-10	27-14-00-01	-010	01
6917070-36	32-35-00-02	-007	01	6960106-11	27-14-00-01	-013	01
6917070-4	32-33-00-01	-030	01	6960106-12	27-14-00-01	-014	01
6917070-9	32-33-00-01	-033	01	6960106-3	27-14-00-01	-001	01
6917900-24	32-49-00-01	-084	01	6960106-4	27-14-00-01	-002	01
6918102-3	27-37-00-01	-006	02	6960106-5	27-14-00-01	-005	01
6918111-13	30-43-05-01	-009A	02	6960106-6	27-14-00-01	-006	01
6918111-37	30-43-05-01	-013	02	6960106-9	27-14-00-01	-009	01
6918111-67	30-43-05-01	-004	02	6960406-10	27-36-00-01	-090	02
6918111-7	30-43-05-01	-007	01	6960406-37	27-36-00-01	-003	01

© Cessna Aircraft Company

PART NUMBER	CH SEC SUBJ FIG	ITEM	REQ	PART NUMBER	CH SEC SUBJ FIG	ITEM	REQ
6960406-39	27-36-00-01	-001	01	6960516-70	27-20-05-01	-008	01
6960406-44	27-36-00-01	-002	01	6960611-1	32-51-35-01	-007	01
6960411-1	27-36-00-01	-031	01	6960611-2	32-51-00-01	-002	02
6960412-14	27-11-00-01	-018	01	6960611-3	32-51-00-01	-007	02
6960412-21	27-11-00-01	-013	01	6960616-1	32-51-35-01	-012	01
6960412-22	27-11-00-01	-008	01	6960616-2	32-51-35-01	-013	01
6960412-23	27-11-00-01	-014	01	6996170-15	27-11-20-01	-002	01
6960414-1	27-11-00-01	-007	01	6996170-15	27-11-20-01	-020	01
6960414-2	27-11-00-01	-021	01	6996170-2	27-11-20-01	-027	01
6960414-3	27-11-00-01	-023	01	6996170-37	27-11-20-01	-027A	01
6960414-4	27-11-00-01	-004	01	6996170-4	27-11-20-01	-019	01
6960414-6	27-35-00-01	-075	01	6996470-11	27-35-00-02	-008	02
6960414-7	27-35-00-01	-076	01	6996470-13	27-35-00-02	-003	02
6960414-8	27-11-00-01	-024	01	6996470-15	27-35-00-02	-001	01
6960416-25	27-35-00-01	-004	01	6996470-16	27-35-00-02	-002	01
6960416-29	27-11-00-01	-026	01	6996470-3	27-35-00-02	-015	NP
6960416-32	27-35-00-01	-006	01	6996470-4	27-35-00-02	-022	02
6960416-33	27-35-00-01	-007	01	6996470-44	27-35-00-02	-015A	02
6960416-34	27-35-00-01	-005	01	6996470-5	27-35-00-02	-023	02
6960416-35	27-35-00-01	-002	01	6996470-6	27-25-00-02	-029	01
6960416-36	27-35-00-01	-003	01	6996470-6	27-35-00-02	-004	02
6960416-37	27-35-00-01	-021	01	6996470-6	27-63-05-01	-008	02
6960416-38	27-35-00-01	-020	01	6996470-6	27-63-05-01	-009	04
6960507-102	27-25-00-01	-008	01	6996570-6	27-25-00-02	-001	04
6960507-103	27-25-00-01	-009	01	6996570-9	27-25-00-02	-019	04
6960507-104	27-25-00-01	-092	01	6Y	11-00-00-01	-051	AR
6960507-106	27-25-00-01	-150A	01	7-2650-1	32-30-20-01	-015	01
6960507-109	27-25-00-01	-239A	01	7-45223-2	38-30-05-01	-002	01
6960507-24	27-25-00-01	-089	01	700-024-50	24-60-10-01	-167	01
6960507-24	27-25-00-01	-160	01	700-070-30	24-60-05-03	-034	01
6960507-24	27-25-00-01	-252	02	700-070-30	24-60-05-03	-035	01
6960507-24	27-25-00-01	-309	02	700-070-30	24-60-05-03	-036	01
6960507-41	27-25-00-01	-016	01	700-070-30	24-60-05-03	-090	01
6960507-42	27-25-00-01	-015	01	700-070-30	24-60-05-03	-091	01
6960507-43	27-25-00-01	-018	01	700-070-30	24-60-05-03	-092	01
6960507-44	27-25-00-01	-017	01	700-070-30	24-60-05-04	-034	01
6960507-46	27-25-00-01	-151	01	700-070-30	24-60-05-04	-035	01
6960507-47	27-25-00-01	-242	01	700-070-30	24-60-05-04	-036	01
6960507-60	27-25-00-01	-115	01	700-070-30	24-60-05-04	-090	01
6960507-60	27-25-00-01	-187	01	700-070-30	24-60-05-04	-091	01
6960507-60	27-25-00-01	-264	01	700-070-30	24-60-05-04	-092	01
6960507-60	27-25-00-01	-321	01	7003586	34-40-00-01	-016	02
6960507-7	27-25-00-01	-096	01	7095-090500	28-20-00-03	-084	01
6960507-73	27-25-00-01	-087	01	7095-090500	28-20-20-01	-022	01
6960507-73	27-25-00-01	-250	01	7101-5	25-25-00-01	-009	02
6960507-74	27-25-00-01	-158	01	7101-6	25-25-00-01	-010	08
6960507-74	27-25-00-01	-307	01	7114010-48	35-10-20-01	-031	01
6960507-75	27-25-00-01	-227	01	7114010-48	35-10-20-01	-167	01
6960507-76	27-25-00-01	-228	01	7115070-10	21-60-00-01	-158	01
6960507-77	27-25-00-01	-239	01	7115070-10	21-60-00-01	-159	01
6960507-79	27-25-00-01	-150	01	7115070-6	21-60-00-01	-160	01
6960507-81	27-25-00-01	-102	01	713201A610SB	24-30-00-01	-006	01
6960507-81	27-25-00-01	-275	01	713841-1	49-10-15-01	-002	01
6960507-82	27-25-00-01	-169	01	713891-1	53-30-02-04	-080	01
6960507-83	27-25-00-01	-332	01	72-111211-102	26-13-00-01	-001	01
6960507-91	27-25-00-01	-106	01	72-436	32-41-05-01	-017	01
6960507-91	27-25-00-01	-269	01	732128-5	21-50-00-01	-011	02
6960507-92	27-25-00-01	-163	01	738384-33	21-50-00-01	-014	01
6960507-93	27-25-00-01	-326	01	740F44-12	71-00-00-01	-010	04
6960507-97	27-25-00-01	-335	01	740F44-24	28-11-55-01	-075	02
6960507-98	27-25-00-01	-230	01	740F44-24	49-10-00-01	-011	02
6960516-68	27-20-05-01	-012	01	740F44-24	71-00-00-01	-011	04

© Cessna Aircraft Company

PART NUMBER	CH SEC SUBJ FIG	ITEM	REQ	PART NUMBER	CH SEC SUBJ FIG	ITEM	REQ
740F44-28	27-24-05-01	-008	01	8718984-9	21-60-00-01	-166	01
7411028-2	53-20-04-01	-039A	01	8901012-1	23-15-00-01	-101	01
7418113-4	33-10-15-01	-003A	01	8901012-2	23-15-00-01	-100	01
746451-3	21-50-20-01	-009	01	8909001-3	34-43-00-01	-010	02
746833-2	21-50-00-01	-005	01	8909002-3	34-31-00-01	-001	01
746833-2	21-50-00-01	-007	01	8909002-4	34-31-00-01	-004	01
7519272-901	34-20-00-01	-012	01	8909011-15	34-57-00-01	-024	01
7519272-901	34-20-00-01	-013	01	8909011-16	34-57-00-01	-025	01
76250-6	24-60-05-01	-096	01	8909011-18	24-30-55-01	-011	01
76250-6	24-60-05-02	-094	01	8909011-23	24-30-55-01	-014	01
76250-6	24-60-05-02	-095	01	8909011-24	24-30-55-01	-015	01
76250-6	34-10-25-01	-001	01	8909011-26	34-57-00-01	-019	01
76250-6	34-10-25-01	-002	01	8909011-3	34-57-00-01	-005	01
76361-20YD	24-60-10-01	-227A	01	8909011-30	24-30-55-01	-006	01
76538-100YD	24-60-05-02	-037	01	8909011-32	34-57-00-01	-024A	01
765421-9	21-50-00-01	-015	01	8909011-33	34-57-00-01	-025A	01
76552-1	24-60-05-01	-097	01	8909011-4	34-57-00-01	-015	01
76552-1	24-60-05-02	-096	01	8909011-6	24-30-55-01	-020	01
76552-1	24-60-05-02	-097	01	8909011-8	24-30-55-01	-018	01
76883-9000	24-60-10-01	-227	01	8909013-3	31-32-10-01	-003	01
76883-9000	24-60-10-02	-227	01	8909102-3	34-51-10-01	-010	02
79230H0735B1	38-30-10-01	-006	01	8909107-3	34-57-00-01	-079	02
79734-004	38-32-05-01	-007	01	8909110-4	23-70-00-01	-001	01
79734-004	38-32-10-01	-015	01	8909111-11	24-60-40-01	-008	01
79C20C	28-10-10-01	-001	04	8909111-6	23-50-00-01	-006	01
7C1-4	26-10-00-01	-015	57	8909111-8	31-40-05-01	-004	01
7C1-4	26-11-00-01	-007	14	8909118-19	24-60-05-01	-101	01
7C2W-140000	21-21-00-01	-020	02	8909118-19	24-60-05-02	-102	01
7C2W-200000	36-10-20-04	-075	02	8909118-22	24-60-05-01	-075	01
7C2W-240400	36-13-00-01	-003	01	8909118-24	24-60-05-02	-075	01
7C2W140000	30-10-00-01	-082	02	8909118-7	24-60-05-01	-027	01
7C2W200000	30-10-00-02	-093	02	8909118-7	24-60-05-02	-027	01
7F2W120005	28-20-00-03	-083	02	8909121-3	23-15-45-01	-006	02
7F2W120005	28-20-20-01	-021	02	8909123-10	31-10-15-01	-003	01
7F2W120005	28-21-00-02	-197	02	8909123-11	31-10-15-01	-007	01
7F2W120005	28-21-00-02	-208	01	8909123-7	31-10-10-01	-004	01
8-0025-1	32-30-20-01	-016	01	8909123-9	31-10-10-01	-002	01
8-405-02	27-10-50-01	-339	01	8909124-7	30-43-05-01	-010	01
8-405-04	52-70-00-01	-010	01	8909124-8	30-43-05-01	-011	01
8-405-04	52-70-40-01	-006	01	8909126-11	23-50-20-01	-009	01
803272-05	35-10-20-01	-002	02	8909126-12	23-50-20-01	-010	01
804882-13	35-10-20-01	-101A	01	8909126-15	23-50-20-01	-008	02
804882-14	35-10-20-01	-001	01	8909126-16	23-50-20-01	-005	02
804882-23	35-10-20-01	-101	01	8909126-20	23-50-20-01	-015	01
805-10930-001	34-47-05-01	-006	01	8909126-21	23-50-20-01	-016	01
805-11500-001	34-47-05-01	-001	01	8909126-5	23-50-20-01	-013	01
805-11590-001	34-47-05-01	-002	01	8909126-6	23-50-20-01	-014	01
821007-1	21-50-00-01	-009	01	8909127-5	53-20-04-01	-056	01
822-1466-001	34-55-00-01	-001	01	8909132-6	21-60-00-01	-001	01
822-1466-001	34-55-00-01	-002	01	8909132-7	27-50-00-02	-006	01
822-1470-001	34-53-00-01	-001	01	8909133-1	31-10-20-01	-004	01
8385	71-70-00-01	-028	01	8909133-10	27-50-00-02	-008	01
8417	71-10-00-01	-256	02	8909133-14	33-10-15-01	-003	01
8417	71-70-00-01	-039	01	8909133-18	34-60-00-01	-081	04
848513	73-10-00-01	-032	01	8909133-2	31-10-25-01	-004	01
848513	73-10-00-02	-035	01	8909133-20	34-60-00-01	-085	01
856B	28-10-10-01	-005	06	8909133-21	34-60-00-01	-077	01
869A4BT	28-11-20-01	-035	02	8909133-22	27-10-50-01	-343	01
8718107-21	32-30-10-01	-003	01	8909133-26	27-40-00-01	-157	01
8718613-18	24-30-30-01	-014	04	8909133-33	21-30-00-01	-010	01
8718613-8	24-30-30-01	-018	01	8909134-10	34-60-00-01	-091	01
8718950-2	21-60-00-01	-164	01	8909134-8	34-60-00-01	-095	01

© Cessna Aircraft Company

PART NUMBER	CH SEC SUBJ FIG	ITEM	REQ
8909134-8	34-60-00-01	-099	02
8909134-9	34-60-00-01	-090	01
8909136-11	34-25-00-01	-014A	01
8909136-3	34-25-00-01	-016	01
8909136-9	34-25-00-01	-014	01
8909138-3	35-20-15-01	-001	02
8909138-5	35-20-15-01	-004	01
8909138-5	35-20-15-01	-005	01
8909140-2	23-50-20-01	-036	02
8909141-1	34-25-00-01	-018	01
8909144-3	31-35-00-01	-006	02
8909317-3	23-15-00-01	-016	01
8909324-3	27-50-00-02	-012	01
8915003-3	23-50-20-01	-006	01
8915003-4	23-50-20-01	-007	01
8955002-10	24-60-40-01	-006	02
8955004-1	24-60-40-01	-009	01
8969106-1	27-36-00-01	-191A	01
8969107-1	27-14-00-01	-016	01
8969108-1	31-10-10-01	-030	01
8969116-1	31-10-25-01	-016	01
8969138-1	23-50-20-01	-033	02
8969143-1	23-50-20-01	-018	01
8969150-1	23-50-20-01	-023	01
8969800-1	32-61-00-01	-006	01
8969900-1	34-25-00-01	-021	01
8969901-1	23-70-00-01	-003	01
8969902-1	27-25-00-02	-015	01
8969902-1	27-25-00-02	-016	01
8969902-1	27-25-00-02	-017	01
8969902-1	27-25-00-02	-018	01
8969903-1	27-36-00-01	-169	01
8969903-1	27-36-00-01	-170	01
8969904-1	27-63-05-01	-001	01
8969904-1	27-63-05-01	-002	01
8969904-1	27-63-05-01	-003	01
8969904-1	27-63-05-01	-004	01
8969904-1	27-63-05-01	-005	01
8969904-1	27-63-05-01	-006	01
8969905-1	27-25-00-02	-028	01
8969905-1	27-35-00-02	-007	01
8969905-1	27-35-00-02	-007A	01
8969906-1	27-25-00-02	-023	01
8969906-1	27-25-00-02	-024	01
8969906-1	27-25-00-02	-025	01
8969906-1	27-25-00-02	-026	01
8969909-1	27-11-20-01	-004	01
8969909-1	27-11-20-01	-022	01
8P	11-00-00-01	-009	AR
90059727	21-23-20-01	-017	04
90059727	21-23-20-01	-032	01
901167-2	23-15-00-01	-025A	02
901167-2	23-15-00-01	-026A	01
9036-301-1	28-21-00-01	-001	01
9036-401-1	28-21-00-01	-001A	01
91131-1	52-40-01-01	-015	06
91131-1	52-40-11-01	-006	03
91131-1	52-40-19-01	-004	01
91131-1	52-40-37-01	-034	01
91131-1	52-40-37-01	-183	01
91131-1	52-40-45-01	-006	02
9154501-5	34-55-00-01	-007	01
9154501-5	34-55-00-01	-008	01
9200-30000-200	34-10-00-01	-027	01
9200-34500-0401	34-15-05-01	-001	01
92046-2	24-30-00-01	-002	01
9215016-6	23-50-20-01	-029	02
93086-1	24-30-00-01	-009	06
93087-1	24-30-00-01	-007	01
93088-1	24-30-00-01	-008	01
93089-1	24-30-00-01	-005	02
9501025-7	23-15-00-01	-078	01
9501035-3	23-15-00-01	-083	01
9502003-2	25-60-00-01	-014	02
9502003-5	25-60-00-01	-011	01
9502035-2	11-N-23-02	-079	01
9502035-3	11-N-23-02	-080	01
9504009-8	34-53-00-01	-012	01
9505010-101	52-40-19-01	-018	01
9505010-32	11-N-22-01	-003	01
9505010-32	11-N-23-02	-005	01
9505010-33	11-N-22-01	-002	01
9505010-33	11-N-23-02	-004	01
9507001-3	34-55-10-01	-004	02
9507001-3	34-57-00-01	-086	02
9508021-3	34-47-00-01	-012	01
9508021-4	34-47-00-01	-013	01
9508021-5	34-47-00-01	-009	01
9508021-7	34-47-00-01	-010	01
9509001-2	53-15-00-02	-097	01
9509001-4	53-15-00-02	-096	01
9509001-5	53-15-00-02	-096A	01
9509101-6	23-11-10-01	-006	01
9509103-10	24-60-05-02	-100	01
9509103-15	24-60-05-01	-018	01
9509103-16	24-60-05-02	-018	01
9509103-17	24-60-05-01	-006	01
9509103-18	24-60-05-02	-006	01
9509103-23	24-60-05-01	-005	01
9509103-24	24-60-05-02	-005	01
9509103-25	24-60-05-02	-039	01
9509103-3	24-60-05-01	-004	01
9509103-4	24-60-05-02	-004	01
9509103-7	24-60-05-01	-002	01
9509103-8	24-60-05-02	-002	01
9509103-9	24-60-05-01	-100	01
9509109-7	53-20-00-02A	-008	01
9509110-11	53-20-00-02A	-001	01
9509118-11	33-10-15-01	-006	NP
9509118-13	53-20-04-01	-055A	01
9509118-14	33-10-15-01	-006A	01
9509118-9	53-20-04-01	-055	01
9509120-1	31-10-20-01	-002	01
9509120-2	31-10-25-01	-002	01
9509120-4	21-60-00-01	-009	01
9509120-5	27-26-00-01	-009	01
9509120-8	21-30-00-01	-008	01
9509124-18	53-23-00-03A	-010	01
9509124-20	53-23-00-03A	-011	01
9509124-23	53-23-00-03A	-002	01
9509124-5	53-23-00-03A	-015	01
9509124-9	53-23-00-03A	-014	01
9509125-3	34-25-00-01	-004	01
9509125-4	34-25-00-01	-005	01

© Cessna Aircraft Company

PART NUMBER	CH SEC SUBJ FIG	ITEM	REQ	PART NUMBER	CH SEC SUBJ FIG	ITEM	REQ
9509126-4	23-50-20-01	-027	02	9509212-5	24-50-05-01	-005	02
9509126-5	23-50-20-01	-030	02	9509213-2	33-30-20-01	-013	01
9509134-3	34-53-00-01	-014	01	9509213-4	33-30-20-01	-011	01
9509134-4	34-53-00-01	-013	01	9509214-2	25-60-00-01	-026	01
9509134-5	34-53-00-01	-008	01	9509218-11	11-N-24-02	-150	01
9509134-6	34-53-00-01	-016	02	9509218-12	11-N-24-02	-153	01
9509134-7	34-53-00-01	-015	02	9509218-13	11-N-24-02	-151	01
9509135-3	33-50-05-01	-006	02	9509218-14	11-N-24-02	-152	01
9509135-7	33-50-05-01	-009	01	9509218-17	11-N-24-02	-002	01
9509203-4	22-10-30-01	-013	02	9509218-18	11-N-24-02	-226	01
9509203-5	22-10-30-01	-009	01	9509218-3	11-N-24-02	-001	01
9509203-8	24-20-20-01	-005	02	9509218-4	11-N-24-02	-003	01
9509203-9	24-20-20-01	-007	02	9509218-5	11-N-24-02	-004	01
9509207-10	34-40-00-01	-009	02	9509218-6	11-N-24-02	-076	01
9509207-12	34-40-00-01	-014	01	9509218-7	11-N-24-02	-075	01
9509207-14	24-20-25-01	-019	02	9509218-9	11-N-24-02	-225	01
9509207-19	24-20-25-01	-004	01	9509302-10	25-70-00-01	-024	01
9509207-21	23-15-05-01	-005	01	9509302-11	25-70-00-01	-027	01
9509207-24	34-40-00-01	-013	01	9509302-12	32-47-10-01	-003	01
9509207-25	24-20-25-01	-009	01	9509302-16	25-70-00-01	-001	02
9509207-27	23-15-05-01	-008	01	9509302-18	25-70-00-01	-015	01
9509207-4	23-70-00-01	-011	01	9509302-2	25-70-00-01	-009	01
9509207-6	34-40-00-01	-004	01	9509302-3	25-70-00-01	-020	01
9509209-4	24-60-15-01	-001	01	9509302-4	25-70-00-01	-021	01
9509209-5	24-60-10-01	-001	01	9509302-5	25-70-00-01	-018	01
9509209-6	24-60-10-02	-001	01	9509302-6	25-70-00-01	-019	01
9509210-1	24-60-00-01	-003	01	9509302-7	25-70-00-01	-008	01
9509210-10	24-60-00-01	-021	01	9509308-2	24-30-00-01	-026	02
9509210-11	24-60-00-01	-019	02	9509308-2	24-35-00-01	-016	01
9509210-12	24-60-10-02	-300	01	9509401-3	34-47-05-01	-008	01
9509210-13	24-60-10-01	-300	01	9509402-3	33-40-10-01	-008	01
9509210-14	24-60-10-02	-075	01	9509402-5	33-40-10-01	-006	01
9509210-15	24-60-15-01	-004	01	9509402-7	33-40-10-01	-008A	01
9509210-23	24-60-15-01	-009	01	9509403-3	33-40-20-01	-006	01
9509210-25	24-60-15-01	-077	01	9509403-5	33-40-20-01	-007	01
9509210-25	24-60-15-01	-079	01	9509407-10	23-13-00-01	-021	01
9509210-27	24-60-15-01	-075	01	9509407-3	23-13-00-01	-018	01
9509210-29	24-60-15-01	-078	01	9509407-7	23-13-00-01	-022	01
9509210-30	24-60-15-01	-076	01	9509407-8	23-13-00-01	-023	01
9509210-31	24-60-15-01	-080	01	9509407-9	23-13-00-01	-020	01
9509210-32	24-60-15-01	-085	02	9509409-2	55-20-10-01	-008	01
9509210-33	24-60-10-01	-337	01	9509409-3	55-20-10-01	-007	01
9509210-33	24-60-10-02	-336	01	9509410-2	23-15-00-01	-093	01
9509210-37	24-60-15-01	-225	01	9509410-3	23-15-00-01	-102	01
9509210-38	24-60-15-01	-150	01	9509410-4	23-15-00-01	-096	01
9509210-40	24-60-10-01	-328	01	9509411-3	34-47-05-01	-004	01
9509210-40	24-60-10-02	-327	01	9509412-2	27-24-10-01	-019	02
9509210-41	24-60-10-01	-075	01	9509415-2	55-40-00-02	-002	01
9509210-42	24-60-10-01	-327	01	9509416-3	34-21-10-01	-005	01
9509210-42	24-60-10-02	-326	01	9509501-3	33-40-17-01	-004	01
9509210-58	24-60-00-01	-016	01	9509501-4	33-40-17-01	-005	01
9509210-61	24-60-00-01	-005	01	9509501-5	33-40-17-01	-009	01
9509210-62	24-60-00-01	-008	01	9509501-6	33-40-17-01	-010	01
9509210-67	24-60-10-01	-010	01	9509602-3	34-47-00-01	-021	01
9509210-68	24-60-10-02	-010	01	9509602-4	34-47-00-01	-022	01
9509210-7	24-60-00-01	-022	01	9509607-10	24-30-30-01	-025	01
9509210-72	24-60-10-01	-225	01	9509607-13	24-30-30-01	-020	02
9509210-72	24-60-10-02	-225	01	9509607-15	24-30-30-01	-021	02
9509210-8	24-60-00-01	-023	01	9509607-17	24-30-30-01	-008	01
9509210-9	24-60-00-01	-020	01	9509607-18	24-30-30-01	-010	01
9509212-3	24-50-05-01	-001	01	9509607-19	24-30-30-01	-012	01
9509212-4	24-50-05-01	-002	01	9509607-20	24-30-30-01	-013	01

© Cessna Aircraft Company

PART NUMBER	CH SEC SUBJ FIG	ITEM	REQ	PART NUMBER	CH SEC SUBJ FIG	ITEM	REQ
9509607-26	24-30-30-01	-031	01	9555024-1	25-25-00-01	-015	01
9509607-26	24-30-30-01	-038	02	9556002-22	24-20-25-01	-015	02
9509607-27	24-30-30-01	-030	01	9556002-28	24-20-25-01	-012	02
9509607-27	24-30-30-01	-033	02	9556002-29	24-20-25-01	-013	01
9509607-30	24-30-30-01	-026	01	9556002-30	24-20-25-01	-014	01
9509607-31	24-30-30-01	-024	01	9556002-31	24-20-25-01	-017	01
9509607-37	24-30-30-01	-011B	02	9556002-32	24-20-25-01	-018	01
9509607-41	24-30-30-01	-009	01	9556002-34	24-20-25-01	-016	02
9509607-42	24-30-30-01	-011	01	9556002-35	23-15-05-01	-014	01
9509607-54	24-30-30-01	-011A	02	9556002-36	23-15-05-01	-015	01
9509607-9	24-30-30-01	-023	01	9556002-37	23-15-05-01	-016	01
9509608-3	52-40-19-01	-015	01	9556002-38	23-15-05-01	-017	01
9509615-3	23-15-00-01	-082	01	9556002-48	24-20-25-01	-006	01
9509615-5	23-15-00-01	-081	01	9556002-49	23-15-05-01	-010	01
9509618-2	23-50-15-01	-002	02	9556002-6	23-15-05-01	-012	02
9510001-15	23-13-00-01	-085	02	9556002-7	23-15-05-01	-013	02
9510004-5	23-13-00-01	-007	01	9560006-2	21-29-00-01	-008	01
9510004-6	23-13-00-01	-008	01	9560006-3	21-29-00-01	-009	01
9510004-8	23-13-00-01	-005	01	9564007-1	53-23-00-03A	-001	02
9510005-13	23-13-00-01	-027	01	9569113-1	31-10-15-01	-024	01
9510005-14	23-13-00-01	-028	01	9569114-1	31-10-20-01	-013	01
9510005-19	23-13-00-01	-031	01	9569119-1	21-30-00-01	-035	01
9510005-21	23-13-00-01	-036	02	9569122-1	45-45-00-01	-004	01
9510005-24	23-13-00-01	-039	02	9569122-2	45-45-00-01	-004A	01
9510005-27	23-13-00-01	-024	01	9569123-1	45-45-00-01	-001	01
9510005-5	23-13-00-01	-015	01	9569225-1	23-15-05-01	-022	01
9510005-6	23-13-00-01	-016	01	9569226-1	23-15-05-01	-023	01
9511043-3	34-43-00-01	-009	02	9569303-1	23-13-00-01	-075	01
9511043-9	34-43-00-01	-008	02	9569420-1	34-47-05-01	-014	01
9513000-2	34-10-20-01	-004	04	9569421-1	23-13-00-01	-079	01
9515002-3	23-50-15-01	-007	02	9569422-1	23-13-00-01	-080	01
9516001-3	34-40-00-01	-018	02	9569802-1	32-61-00-01	-089	02
9516X1-6-6	27-63-05-01	-013	02	9569804-1	32-61-00-01	-083	01
9516X1-6-6	27-63-05-01	-014	04	9569805-1	32-61-00-01	-084	01
9516X1-6-6	55-40-00-02	-007	01	9569909-1	33-40-55-01	-001	01
9516X1-6-6	57-60-00-03	-013	02	9569910-1	33-40-55-01	-002	01
9519001-9	57-60-00-03	-011	02	9569913-1	52-40-01-01	-025	01
9519002-13	55-20-10-01	-003	01	9590013-2	55-30-00-05	-013	01
9519002-14	55-20-10-01	-004	01	9590013-3	55-30-00-05	-011	01
9519002-7	55-20-10-01	-011	02	9590013-4	55-30-00-05	-012	01
9519003-11	55-40-00-02	-006	01	9590047-3	34-21-10-01	-007	01
9519003-13	55-40-00-02	-004	01	9590047-4	34-21-10-01	-009	01
9519005-10	27-24-10-01	-007A	02	960711-1	57-00-05-01	-005	07
9519005-11	27-24-10-01	-015A	01	960711-1	57-00-05-01	-017	36
9519005-3	27-24-10-01	-016	01	960711-1	57-00-05-01	-087	01
9519005-3	27-24-15-01	-013	01	960711-1	57-00-05-01	-101	02
9519005-6	27-24-10-01	-014	01	960711-2	57-00-05-01	-011	14
9519005-7	27-24-10-01	-007	NP	960711-2	57-00-05-01	-079	26
9519005-9	27-24-10-01	-015	NP	960711-2	57-00-05-01	-095	02
9519008-3	57-60-00-03	-009	01	960711-3	57-00-05-01	-023	02
9519008-4	57-60-00-03	-010	01	960711-4	57-10-01-01	-002	01
9519008-5	57-60-00-03	-003	02	960711-4	57-10-01-01	-007	01
9522-11	52-11-20-01	-008	01	960711-4	57-10-01-01	-012	01
9522-13	52-11-20-01	-007	01	960711-4	57-10-01-01	-018	01
9522-17	52-11-20-01	-009	01	9654583-5	24-60-40-01	-005	01
9522002-4	31-30-00-01	-007	01	9654583-6	24-60-40-01	-001	01
9523030-3	23-11-20-01	-003	01	9654583-7	24-60-40-01	-003	02
9552006-5	23-70-00-01	-004	01	97-2263	27-26-00-01	-011	01
9554002-51	23-70-00-01	-012	02	97-2473	49-40-00-01	-012	01
9554002-53	34-40-00-01	-010	02	9783-8-8	27-25-00-02	-032	01
9554002-54	34-40-00-01	-011	02	98120	32-30-00-02	-150	02
9554043-3	25-60-00-01	-016	01	98120	32-30-00-03	-012	01

© Cessna Aircraft Company

PART NUMBER	CH SEC SUBJ FIG	ITEM	REQ
9831	52-10-22-02	-189	01
990007	53-42-01-01	-103	01
990008	53-42-01-01	-104	01
9912016-2	28-11-30-01	-001	02
9912057-13	35-10-20-01	-091	01
9912388-6	32-45-00-01	-007	01
9912413-3	30-20-00-02	-009	01
9912413-3	30-20-00-02	-021	01
9912416-1	26-11-00-01	-001	01
9912501-2	28-11-10-01	-176	02
9912501-2	28-11-20-01	-175	01
9912518-2	21-60-00-01	-075	01
9912644-10	29-23-05-01	-001	02
9912644-7	29-23-05-01	-075	01
9912644-9	32-51-05-01	-001	01
9912679-4	33-40-20-01	-001	01
9912679-4	33-40-20-01	-004	01
9912750-2	32-30-10-01	-001	01
9913-1	33-50-05-01	-001	01
9913-1	33-50-05-01	-004	01
9914058-11	24-30-35-01	-001A	01
9914058-11	24-30-35-01	-002A	01
9914058-6	24-30-35-01	-001	01
9914058-6	24-30-35-01	-002	01
9914067-19	35-10-00-01	-009	01
9914067-40	35-10-05-01	-006	01
9914092-2	26-10-10-01	-001	01
9914106-13	28-10-05-01	-001	02
9914106-14	28-10-05-01	-006	NP
9914106-15	28-10-05-01	-002	02
9914107-1	28-21-00-02	-300	01
9914107-1	28-21-00-03	-180	02
9914107-3	28-21-00-02	-156	01
9914107-3	28-21-00-03	-104	02
9914113-202	33-10-15-01	-001B	01
9914113-3	33-10-15-01	-001	NP
9914113-5	33-10-15-01	-001A	NP
9914113-7	33-10-15-01	-001C	01
9914116-35	56-15-00-01	-003	01
9914116-36	56-15-00-01	-004	01
9914130-20	21-23-00-01	-023	01
9914130-20	21-23-00-01	-024	01
9914132-1	21-27-00-01	-001	02
9914133-2	36-15-00-03	-022	02
9914149-2	36-10-20-02	-092	01
9914149-2	36-10-20-02	-093	01
9914159-12	56-20-00-01	-008	01
9914168-9	28-21-00-01	-024	01
9914183-12	21-30-00-01	-012	01
9914183-14	21-33-00-01	-005	01
9914183-15	21-33-00-01	-004	01
9914183-7	21-33-00-01	-016	01
9914183-7	21-35-00-01	-033	01
9914183-8	21-31-00-01	-006	01
9914216-2	24-20-10-01	-001	NP
9914216-2	24-20-10-01	-003	NP
9914216-4	24-20-00-01	-003	01
9914216-6	24-20-10-01	-002	01
9914216-6	24-20-10-01	-004	01
9914343-15	52-40-37-01	-076	01
9914343-18	52-40-37-01	-225	01
9914343-21	52-40-37-01	-077	01
9914343-29	52-40-37-01	-226	01
9914344-10	27-50-00-01	-387	02
9914344-30	27-50-00-01	-086	02
9914344-30	27-50-00-01	-160	02
9914344-30	27-50-00-01	-240	04
9914344-30	27-50-00-01	-315	04
9914344-30	27-50-00-01	-386	02
9914344-30	27-50-00-01	-460	02
9914344-41	27-50-00-01	-012	01
9914344-43	27-50-00-01	-159	02
9914344-46	27-50-00-01	-314	02
9914344-47	27-50-00-01	-011	01
9914344-48	27-50-00-01	-085	02
9914344-49	27-50-00-01	-239	01
9914344-50	27-50-00-01	-385	01
9914379-7	56-13-00-01	-001	01
9914379-8	56-13-00-01	-002	01
9914380-13	56-11-05-01	-001	01
9914380-14	56-11-05-01	-002	01
9914411-2	30-43-05-01	-001	01
9914411-2	30-43-05-01	-002	01
9914416-2	27-50-00-01	-004	02
9914421-3	28-20-05-01	-001	01
9914421-3	28-20-05-01	-002	01
9914422-12	28-40-10-01	-001	01
9914423-2	28-20-30-01	-001	01
9914423-2	28-20-30-01	-002	01
9914423-2	28-20-30-01	-017	01
9914423-2	28-20-30-01	-018	01
9914423-2	28-20-30-01	-075	01
9914423-2	28-20-30-01	-076	01
9914423-4	28-20-30-01	-004	02
9914423-4	28-20-30-01	-020	02
9914423-4	28-20-30-01	-078	02
9914423-4	28-23-00-01	-018	02
9914424-2	28-20-20-01	-012	02
9914424-3	28-20-20-01	-001	02
9914424-5	28-20-20-01	-016	02
9914424-6	28-20-21-01	-001	02
9914424-6	28-20-21-01	-162	02
9914425-1	73-10-00-01	-027	01
9914425-1	73-10-00-02	-030	01
9914426-1	28-40-15-01	-001	02
9914426-2	28-40-15-01	-002	01
9914426-3	28-40-15-01	-003	01
9914431-10	78-30-00-01	-002	01
9914431-11	24-60-25-01	-009	01
9914431-11	24-60-25-01	-022	01
9914431-6	78-30-10-01	-001	01
9914431-6	78-30-10-02	-075	01
9914431-9	78-30-00-01	-001	01
9914432-3	49-10-00-01	-001	01
9914432-5	49-40-05-01	-001	01
9914433-2	80-10-00-01	-150	01
9914433-2	80-10-00-01	-151	01
9914433-9	80-10-00-01	-075	02
9914435-4	24-20-00-01	-001	01
9914435-4	24-20-00-01	-002	01
9914440-15	27-10-50-01	-075	01
9914440-15	27-10-50-01	-076	01
9914440-16	27-33-00-01	-167	01
9914440-16	27-33-00-01	-168	01

© Cessna Aircraft Company

PART NUMBER	CH SEC SUBJ FIG	ITEM	REQ
9914440-16	27-33-00-01	-169	01
9914440-16	27-33-00-01	-170	01
9914440-17	27-20-15-01	-001	02
9914440-17	27-20-15-01	-002	02
9914441-10	27-13-35-01	-002	02
9914441-10	27-60-40-01	-003	02
9914441-11	27-60-40-01	-002	02
9914441-12	27-13-35-01	-001	02
9914441-12	27-60-40-01	-001	02
9914450-2	32-47-15-01	-001	04
9914450-4	32-47-10-01	-001	01
9914450-5	32-47-05-01	-001	01
9914450-5	32-47-05-01	-002	01
9914451-3	32-30-30-01	-001	NP
9914451-4	32-30-30-01	-002	02
9914452-3	32-30-20-01	-001	01
9914453-1	29-10-25-01	-001	01
9914453-1	29-10-25-01	-002	01
9914454-3	29-10-05-01	-001	01
9914454-3	29-10-05-01	-002	01
9914455-9	32-51-00-01	-150	01
9914457-1	29-10-07-01	-004	01
9914460-3	29-10-10-01	-001	01
9914460-3	29-10-10-01	-150	01
9914463-10	32-41-20-01	-007	01
9914463-11	32-41-20-01	-007A	01
9914463-12	32-43-00-02	-270A	04
9914463-4	32-41-20-01	-009	01
9914463-5	32-41-20-01	-012	01
9914463-9	32-43-00-02	-270	04
9914464-4	29-21-00-01	-001	01
9914465-2	29-10-30-01	-082	02
9914465-3	29-10-30-01	-005	01
9914465-3	29-10-30-01	-159	01
9914465-3	29-10-30-01	-165	01
9914465-3	29-10-30-01	-228	01
9914465-4	29-10-30-01	-085	01
9914465-5	29-10-30-01	-162	01
9914465-5	29-10-30-01	-225	01
9914465-6	29-10-30-01	-075	02
9914465-6	29-10-30-01	-150	01
9914465-7	29-10-30-01	-001	02
9914465-7	29-10-30-01	-156	01
9914465-8	29-10-30-01	-078	01
9914465-8	29-10-30-01	-153	01
9914468-4	32-43-10-01	-001	01
9914469-3	29-20-05-01	-001	01
9914470-4	28-20-35-01	-001	01
9914470-4	28-20-35-01	-002	01
9914473-2	32-41-05-01	-007	01
9914473-3	32-41-05-01	-007A	01
9914475-1	28-11-40-01	-006	04
9914475-1	28-11-40-01	-011	02
9914475-1	28-11-40-01	-075	22
9914475-1	28-11-40-01	-076	06
9914475-1	28-11-40-01	-077	04
9914475-1	28-11-40-01	-087	02
9914475-1	28-11-40-01	-093	02
9914475-2	28-11-40-01	-002	04
9914475-3	28-11-40-01	-082	04
9914475-3	28-11-40-01	-083	02
9914478-2	32-49-00-01	-021	01
9914479-4	32-49-00-01	-001	01
9914479-5	32-33-05-01	-001	01
9914483-2	29-10-80-01	-001	01
9914483-2	29-10-80-01	-089	01
9914483-2	29-23-00-01	-385	01
9914485-5	29-30-00-01	-001	01
9914485-5	29-30-00-01	-011	01
9914487-1	37-10-00-01	-089	01
9914487-11	21-30-00-01	-001	01
9914487-12	21-35-00-01	-008	01
9914487-14	21-35-00-01	-089	01
9914487-2	37-10-00-01	-007	01
9914488-2	28-20-40-01	-001	01
9914488-2	28-20-40-01	-002	01
9914488-3	28-20-45-01	-001	01
9914488-3	28-20-45-01	-002	01
9914495-12	21-50-00-01	-001	01
9914495-12	21-50-00-01	-002	01
9914495-6	21-50-20-01	-005	02
9914502-4	27-50-00-01	-075	01
9914502-4	27-50-00-01	-151	02
9914502-4	27-50-00-01	-225	01
9914502-5	27-50-00-01	-076	01
9914502-5	27-50-00-01	-150	02
9914502-5	27-50-00-01	-226	01
9914502-6	27-50-00-01	-300	01
9914502-6	27-50-00-01	-375	01
9914502-7	27-50-00-01	-301	01
9914502-7	27-50-00-01	-376	01
9914502-8	27-50-00-01	-451	02
9914502-9	27-50-00-01	-450	02
9914504-1	21-21-00-01	-004	01
9914504-1	21-21-00-01	-005	01
9914505-1	28-11-10-01	-163A	NP
9914505-1	28-11-20-01	-013	02
9914505-3	28-11-10-01	-163	02
9914509-19	27-40-00-01	-001	01
9914510-4	27-50-00-01	-464	01
9914510-4	27-50-00-01	-465	01
9914512-1	26-10-00-01	-001	01
9914512-1	26-10-00-01	-002	01
9914513-2	26-23-00-01	-001	01
9914513-4	26-20-15-01	-001	NP
9914513-4	26-20-15-01	-002	02
9914515-1	73-30-00-01	-001	02
9914518-1	36-10-20-04	-097	01
9914519-2	36-10-20-02	-089	01
9914519-2	36-10-20-02	-090	01
9914519-4	36-10-20-03	-087	01
9914519-4	36-10-20-03	-088	01
9914520-1	36-10-20-04	-084	01
9914520-1	36-10-20-04	-085	01
9914520-2	36-10-20-02	-094	02
9914521-5	30-10-00-01	-003	01
9914521-5	30-10-00-01	-004	01
9914521-6	30-20-00-02	-010	02
9914521-7	30-13-00-01	-001	01
9914521-7	30-13-00-01	-002	01
9914522-1	36-10-20-02	-075	02
9914523-4	21-70-05-01	-003	02
9914524-2	29-30-00-01	-003	01
9914524-2	29-30-00-01	-008	01

© Cessna Aircraft Company

PART NUMBER	CH SEC SUBJ FIG	ITEM	REQ	PART NUMBER	CH SEC SUBJ FIG	ITEM	REQ
9914524-2	29-30-00-01	-013	01	9914626-104	25-80-00-07	-094	01
9914524-2	32-43-00-02	-167	01	9914626-105	25-80-00-07	-031	01
9914524-2	32-43-00-02	-168	01	9914626-106	25-80-00-07	-020	01
9914524-2	32-43-00-02	-189	01	9914626-107	25-80-00-07	-037	01
9914524-2	32-43-00-02	-190	01	9914626-108	25-80-00-07	-018	01
9914532-3	27-80-05-01	-001	01	9914626-109	25-80-00-07	-046	01
9914534-11	71-20-00-01	-010	04	9914626-110	25-80-00-07	-082	01
9914534-15	71-20-00-01	-005	04	9914626-112	25-80-00-07	-095	01
9914534-16	71-20-00-01	-004	04	9914626-114	25-80-00-07	-043	01
9914536-3	30-10-20-01	-018	01	9914626-115	25-80-00-09	-235	01
9914536-3	30-10-20-01	-019	01	9914626-116	25-80-00-07	-045	01
9914536-3	36-10-20-02	-021	01	9914626-117	25-80-00-09	-238	01
9914536-3	36-10-20-02	-022	01	9914626-119	25-80-00-09	-233	01
9914536-5	30-10-00-02	-150	01	9914626-121	25-80-00-09	-159	01
9914536-5	36-10-20-04	-080	01	9914626-123	25-80-00-09	-154	01
9914536-5	36-10-20-04	-081	01	9914626-124	25-80-00-09	-156	01
9914536-6	21-21-00-01	-024	01	9914626-125	25-80-00-09	-013	01
9914552-1	36-10-20-04	-014	01	9914626-126	25-80-00-09	-081	01
9914552-1	36-10-20-04	-015	01	9914626-127	25-80-00-09	-080	01
9914553-1	52-30-35-01	-001	01	9914626-128	25-80-00-09	-077	01
9914557-2	55-30-00-01	-035	01	9914626-129	25-80-00-09	-155	01
9914557-202	55-30-00-01	-017	01	9914626-130	25-80-00-09	-006	01
9914557-26	55-30-00-01	-024	01	9914626-136	25-80-00-07	-089	01
9914557-27	55-30-00-01	-025	01	9914626-138	25-80-00-07	-044	01
9914557-28	55-30-00-01	-026	01	9914626-140	25-80-00-07	-042	01
9914557-29	55-30-00-01	-027	01	9914626-141	25-80-00-07	-001	01
9914557-30	55-30-00-01	-028	01	9914626-142	25-80-00-07	-038	01
9914557-31	55-30-00-01	-029	01	9914626-143	25-80-00-07	-040	01
9914557-32	55-30-00-01	-030	01	9914626-144	25-80-00-07	-075	01
9914557-33	55-30-00-01	-031	01	9914626-145	25-80-00-07	-021	01
9914557-34	55-30-00-01	-032	01	9914626-146	25-80-00-07	-076	01
9914557-35	55-30-00-01	-034	01	9914626-147	25-80-00-07	-022	01
9914557-37	55-30-00-01	-016	NP	9914626-148	25-80-00-07	-077	01
9914557-4	55-30-00-01	-021	01	9914626-149	25-80-00-07	-023	01
9914558-10	27-32-00-01	-179	01	9914626-150	25-80-00-07	-078	01
9914558-12	27-21-00-01	-012	01	9914626-151	25-80-00-07	-024	01
9914558-12	27-21-00-01	-013	01	9914626-152	25-80-00-07	-079	01
9914558-8	27-10-50-01	-225	01	9914626-153	25-80-00-07	-025	01
9914558-9	27-26-00-01	-001	01	9914626-154	25-80-00-07	-080	01
9914581-5	24-60-35-01	-001	01	9914626-155	25-80-00-07	-026	01
9914581-5	24-60-35-01	-017	01	9914626-156	25-80-00-07	-081	01
9914581-6	24-60-10-01	-005	01	9914626-157	25-80-00-07	-027	01
9914581-6	24-60-10-02	-005	01	9914626-158	25-80-00-07	-015	01
9914582-1	77-30-00-01	-001	02	9914626-159	25-80-00-07	-028	01
9914585-1	71-00-00-01	-001	02	9914626-160	25-80-00-07	-014	01
9914593-1	29-10-07-01	-001	01	9914626-161	25-80-00-07	-029	01
9914593-1	29-10-07-01	-002	01	9914626-162	25-80-00-07	-013	01
9914594-1	29-21-00-01	-024	01	9914626-163	25-80-00-07	-012	01
9914600-3	27-24-05-01	-001	01	9914626-27	25-80-00-03	-169	01
9914602-1	52-11-00-01	-046	01	9914626-30	25-80-00-03	-163	01
9914604-1	27-20-00-01	-089	01	9914626-31	25-80-00-03	-155	01
9914604-1	27-20-00-01	-090	01	9914626-38	25-80-00-08	-003	01
9914609-5	33-10-05-01	-001	01	9914626-39	25-80-00-02	-156	01
9914610-5	33-10-05-01	-004	01	9914626-40	25-80-00-04	-164	01
9914612-3	30-10-15-01	-001	01	9914626-409	25-80-00-03	-087	01
9914612-4	30-10-15-01	-002	01	9914626-41	25-80-00-02	-163	01
9914614-2	29-23-00-01	-082	01	9914626-410	25-80-00-04	-031	01
9914615-4	27-50-00-01	-001	01	9914626-411	25-80-00-03	-031	01
9914626-100	25-80-00-07	-093	01	9914626-412	25-80-00-04	-025	01
9914626-101	25-80-00-07	-032	01	9914626-413	25-80-00-03	-081	01
9914626-102	25-80-00-07	-083	01	9914626-414	25-80-00-04	-080	01
9914626-103	25-80-00-07	-030	01	9914626-415	25-80-00-03	-093	01

© Cessna Aircraft Company

PART NUMBER	CH SEC SUBJ FIG	ITEM	REQ
9914626-416	25-80-00-04	-156	01
9914626-418	25-80-00-04	-182	01
9914626-42	25-80-00-04	-178	01
9914626-44	25-80-00-04	-079	01
9914626-45	25-80-00-03	-025	01
9914626-50	25-80-00-03	-166	01
9914626-52	25-80-00-04	-078	01
9914626-54	25-80-00-06	-016	01
9914626-55	25-80-00-03	-018	01
9914626-56	25-80-00-06	-009	01
9914626-58	25-80-00-06	-003	01
9914626-60	25-80-00-06	-007	01
9914626-61	25-80-00-07	-008	01
9914626-63	25-80-00-07	-007	01
9914626-65	25-80-00-07	-009	01
9914626-66	25-80-00-06	-015	01
9914626-67	25-80-00-07	-006	01
9914626-68	25-80-00-06	-010	01
9914626-69	25-80-00-07	-010	01
9914626-70	25-80-00-06	-005	01
9914626-71	25-80-00-07	-005	01
9914626-72	25-80-00-06	-004	01
9914626-73	25-80-00-07	-085	01
9914626-74	25-80-00-06	-001	01
9914626-75	25-80-00-07	-088	01
9914626-76	25-80-00-06	-002	01
9914626-77	25-80-00-07	-003	01
9914626-79	25-80-00-07	-002	01
9914626-81	25-80-00-07	-019	01
9914626-82	25-80-00-07	-016	01
9914626-83	25-80-00-07	-017	01
9914626-84	25-80-00-07	-087	01
9914626-85	25-80-00-07	-041	01
9914626-86	25-80-00-07	-090	01
9914626-87	25-80-00-07	-039	01
9914626-88	25-80-00-07	-086	01
9914626-90	25-80-00-07	-091	01
9914626-92	25-80-00-07	-011	01
9914626-93	25-80-00-07	-033	01
9914626-94	25-80-00-07	-004	01
9914626-95	25-80-00-07	-034	01
9914626-96	25-80-00-07	-092	01
9914626-97	25-80-00-07	-035	01
9914626-98	25-80-00-07	-084	01
9914626-99	25-80-00-07	-036	01
9914627-100	25-80-00-04	-157	01
9914627-101	25-80-00-03	-152	01
9914627-102	25-80-00-04	-160	01
9914627-103	25-80-00-03	-076	01
9914627-104	25-80-00-04	-158	01
9914627-105	25-80-00-03	-077	01
9914627-106	25-80-00-04	-162	01
9914627-107	25-80-00-02	-226	01
9914627-108	25-80-00-04	-171	01
9914627-109	25-80-00-02	-150	01
9914627-110	25-80-00-04	-173	01
9914627-111	25-80-00-03	-153	01
9914627-112	25-80-00-04	-175	01
9914627-113	25-80-00-03	-096	01
9914627-114	25-80-00-04	-176	01
9914627-115	25-80-00-03	-091	01
9914627-116	25-80-00-04	-163	01
9914627-117	25-80-00-03	-090	01
9914627-118	25-80-00-04	-168	01
9914627-119	25-80-00-03	-085	01
9914627-120	25-80-00-04	-169	01
9914627-121	25-80-00-03	-084	01
9914627-122	25-80-00-04	-170	01
9914627-123	25-80-00-03	-079	01
9914627-124	25-80-00-04	-177	01
9914627-125	25-80-00-03	-078	01
9914627-126	25-80-00-04	-159	01
9914627-127	25-80-00-03	-034	01
9914627-128	25-80-00-04	-161	01
9914627-129	25-80-00-03	-033	01
9914627-130	25-80-00-04	-174	01
9914627-131	25-80-00-03	-028	01
9914627-132	25-80-00-04	-172	01
9914627-133	25-80-00-03	-094	01
9914627-134	25-80-00-04	-077	01
9914627-135	25-80-00-03	-095	01
9914627-136	25-80-00-04	-153	01
9914627-137	25-80-00-03	-092	01
9914627-138	25-80-00-04	-154	01
9914627-139	25-80-00-03	-088	01
9914627-140	25-80-00-04	-083	01
9914627-141	25-80-00-03	-089	01
9914627-142	25-80-00-04	-165	01
9914627-143	25-80-00-03	-086	01
9914627-144	25-80-00-04	-166	01
9914627-145	25-80-00-03	-082	01
9914627-146	25-80-00-04	-179	01
9914627-147	25-80-00-03	-083	01
9914627-149	25-80-00-03	-080	01
9914627-150	25-80-00-04	-185	01
9914627-151	25-80-00-03	-036	01
9914627-152	25-80-00-04	-180	01
9914627-153	25-80-00-02	-170	01
9914627-154	25-80-00-02	-164	01
9914627-155	25-80-00-03	-035	01
9914627-156	25-80-00-02	-158	01
9914627-157	25-80-00-03	-032	01
9914627-158	25-80-00-02	-165	01
9914627-159	25-80-00-03	-030	01
9914627-160	25-80-00-02	-157	01
9914627-161	25-80-00-03	-029	01
9914627-162	25-80-00-04	-075	01
9914627-163	25-80-00-02	-169	01
9914627-164	25-80-00-04	-076	01
9914627-165	25-80-00-02	-167	01
9914627-166	25-80-00-04	-081	01
9914627-167	25-80-00-02	-091	01
9914627-168	25-80-00-04	-082	01
9914627-169	25-80-00-02	-168	01
9914627-170	25-80-00-04	-155	01
9914627-171	25-80-00-02	-088	01
9914627-172	25-80-00-04	-167	01
9914627-173	25-80-00-02	-155	01
9914627-174	25-80-00-04	-181	01
9914627-175	25-80-00-02	-153	01
9914627-176	25-80-00-04	-183	01
9914627-177	25-80-00-02	-154	01
9914627-178	25-80-00-02	-171	01
9914627-179	25-80-00-02	-095	01

© Cessna Aircraft Company

PART NUMBER	CH SEC SUBJ FIG	ITEM	REQ
9914627-180	25-80-00-02	-166	01
9914627-181	25-80-00-02	-094	01
9914627-182	25-80-00-02	-152	01
9914627-183	25-80-00-02	-090	01
9914627-184	25-80-00-02	-093	01
9914627-185	25-80-00-02	-089	01
9914627-186	25-80-00-02	-092	01
9914627-187	25-80-00-02	-162	01
9914627-188	25-80-00-02	-087	01
9914627-189	25-80-00-02	-161	01
9914627-190	25-80-00-04	-184	01
9914627-191	25-80-00-02	-160	01
9914627-192	25-80-00-06	-006	01
9914627-194	25-80-00-06	-008	01
9914627-196	25-80-00-06	-011	01
9914627-198	25-80-00-06	-013	01
9914627-400	25-80-00-06	-014	01
9914627-402	25-80-00-06	-012	01
9914627-414	25-80-00-04	-027	01
9914627-418	25-80-00-04	-028	01
9914627-420	25-80-00-04	-033	01
9914627-426	25-80-00-09	-239	03
9914627-432	25-80-00-03	-019	01
9914627-440	25-80-00-04	-026	01
9914627-442	25-80-00-04	-030	01
9914627-443	25-80-00-03	-027	01
9914627-444	25-80-00-04	-029	01
9914627-445	25-80-00-03	-022	01
9914627-446	25-80-00-04	-032	01
9914627-447	25-80-00-03	-021	01
9914627-448	25-80-00-02	-086	01
9914627-450	25-80-00-02	-081	01
9914627-452	25-80-00-02	-080	01
9914627-458	25-80-00-09	-015	01
9914627-46	25-80-00-02	-230	01
9914627-460	25-80-00-09	-016	01
9914627-461	25-80-00-03	-024	01
9914627-462	25-80-00-09	-014	01
9914627-463	25-80-00-03	-023	01
9914627-464	25-80-00-09	-084	01
9914627-465	25-80-00-03	-020	01
9914627-466	25-80-00-09	-237	02
9914627-467	25-80-00-03	-026	01
9914627-470	25-80-00-09	-022	01
9914627-470	25-80-00-09	-079	05
9914627-470	25-80-00-09	-158	04
9914627-470	25-80-00-09	-232	03
9914627-471	25-80-00-02	-085	01
9914627-472	25-80-00-09	-019	01
9914627-473	25-80-00-02	-078	01
9914627-474	25-80-00-09	-012	05
9914627-475	25-80-00-02	-083	01
9914627-477	25-80-00-02	-082	01
9914627-478	25-80-00-09	-020	01
9914627-479	25-80-00-02	-084	01
9914627-480	25-80-00-09	-021	01
9914627-480	25-80-00-09	-078	08
9914627-480	25-80-00-09	-157	06
9914627-480	25-80-00-09	-234	04
9914627-481	25-80-00-02	-079	01
9914627-482	25-80-00-09	-160	01
9914627-482	25-80-00-09	-240	01
9914627-483	25-80-00-09	-236	02
9914627-484	25-80-00-09	-161	01
9914627-485	25-80-00-09	-152	02
9914627-485	25-80-00-09	-228	02
9914627-486	25-80-00-09	-229	04
9914627-487	25-80-00-09	-010	01
9914627-487	25-80-00-09	-076	08
9914627-487	25-80-00-09	-153	04
9914627-487	25-80-00-09	-225	04
9914627-488	25-80-00-09	-007	01
9914627-489	25-80-00-09	-002	02
9914627-49	25-80-00-02	-232	01
9914627-490	25-80-00-09	-001	05
9914627-491	25-80-00-09	-230	02
9914627-492	25-80-00-09	-008	01
9914627-493	25-80-00-09	-009	01
9914627-493	25-80-00-09	-075	10
9914627-493	25-80-00-09	-150	10
9914627-493	25-80-00-09	-226	04
9914627-495	25-80-00-09	-151	02
9914627-495	25-80-00-09	-227	02
9914627-496	25-80-00-09	-004	03
9914627-497	25-80-00-09	-082	01
9914627-498	25-80-00-09	-083	01
9914627-51	25-80-00-03	-171	01
9914627-53	25-80-00-03	-170	01
9914627-55	25-80-00-03	-168	01
9914627-57	25-80-00-03	-158	01
9914627-59	25-80-00-03	-159	01
9914627-61	25-80-00-03	-160	01
9914627-63	25-80-00-03	-161	01
9914627-67	25-80-00-03	-157	01
9914627-69	25-80-00-03	-172	01
9914627-71	25-80-00-03	-165	01
9914627-72	25-80-00-02	-235	01
9914627-74	25-80-00-02	-229	01
9914627-75	25-80-00-03	-167	01
9914627-77	25-80-00-03	-162	01
9914627-78	25-80-00-04	-150	01
9914627-79	25-80-00-03	-164	01
9914627-81	25-80-00-03	-154	01
9914627-82	25-80-00-04	-152	01
9914627-83	25-80-00-02	-233	01
9914627-84	25-80-00-04	-151	01
9914627-85	25-80-00-03	-156	01
9914627-87	25-80-00-02	-227	01
9914627-89	25-80-00-02	-228	01
9914627-91	25-80-00-02	-234	01
9914627-93	25-80-00-02	-231	01
9914627-94	25-80-00-02	-225	01
9914627-95	25-80-00-03	-150	01
9914627-96	25-80-00-02	-159	01
9914627-97	25-80-00-03	-075	01
9914627-98	25-80-00-02	-151	01
9914627-99	25-80-00-03	-151	01
9914637-2	32-30-15-01	-001	01
9914644-1	27-10-50-01	-150	02
9914718-2	32-41-05-01	-005	01
9914752-1	24-30-00-01	-001	01
9914752-1	24-30-00-01	-003	01
9914752-1	24-35-00-01	-001	01
9914752-3	24-30-00-01	-022	01

© Cessna Aircraft Company

PART NUMBER	CH SEC SUBJ FIG	ITEM	REQ	PART NUMBER	CH SEC SUBJ FIG	ITEM	REQ
9914752-3	24-30-00-01	-023	01	9914795-145	25-80-00-02	-005	01
9914752-3	24-35-00-01	-014	01	9914795-146	25-80-00-01	-011	01
9914752-3	24-60-10-01	-303	01	9914795-147	25-80-00-02	-006	01
9914752-3	24-60-10-02	-303	01	9914795-149	25-80-00-02	-007	01
9914752-3	24-60-15-01	-023	01	9914795-15	25-80-00-01	-079	01
9914752-4	24-30-00-01	-004	01	9914795-151	25-80-00-02	-010	01
9914752-4	24-35-00-01	-002	01	9914795-153	25-80-00-02	-011	01
9914752-7	24-30-15-01	-001	01	9914795-155	25-80-00-02	-018	01
9914752-7	24-30-15-01	-002	01	9914795-157	25-80-00-02	-019	01
9914752-7	24-35-00-01	-012	01	9914795-159	25-80-00-02	-020	01
9914757-2	32-51-35-01	-001	01	9914795-16	25-80-00-01	-154	01
9914757-4	32-51-35-01	-002	01	9914795-161	25-80-00-02	-021	01
9914757-5	32-51-35-01	-003	01	9914795-163	25-80-00-02	-077	01
9914785-1	76-10-00-01	-001	NP	9914795-165	25-80-00-09	-003	02
9914785-5	76-10-00-01	-002	01	9914795-167	25-80-00-09	-017	01
9914786-1	36-15-00-03	-083	02	9914795-169	25-80-00-01	-076	01
9914786-1	36-15-00-03	-095	02	9914795-17	25-80-00-01	-085	01
9914795-1	25-80-00-01	-078	01	9914795-170	25-80-00-01	-150	01
9914795-10	25-80-00-01	-159	01	9914795-171	25-80-00-01	-075	01
9914795-100	25-80-00-02	-014	01	9914795-172	25-80-00-01	-151	01
9914795-101	25-80-00-05	-002	01	9914795-173	25-80-00-08	-001	01
9914795-102	25-80-00-02	-013	01	9914795-174	25-80-00-08	-002	01
9914795-103	25-80-00-05	-003	01	9914795-18	25-80-00-01	-160	01
9914795-104	25-80-00-02	-012	01	9914795-19	25-80-00-01	-086	01
9914795-105	25-80-00-05	-004	01	9914795-2	25-80-00-01	-153	01
9914795-106	25-80-00-02	-015	01	9914795-20	25-80-00-01	-161	01
9914795-107	25-80-00-05	-005	01	9914795-21	25-80-00-01	-087	01
9914795-108	25-80-00-02	-016	01	9914795-22	25-80-00-01	-162	01
9914795-109	25-80-00-03	-013	01	9914795-23	25-80-00-03	-005	01
9914795-11	25-80-00-01	-077	01	9914795-24	25-80-00-04	-005	01
9914795-110	25-80-00-02	-017	01	9914795-25	25-80-00-03	-006	01
9914795-111	25-80-00-03	-014	01	9914795-26	25-80-00-04	-006	01
9914795-112	25-80-00-02	-022	01	9914795-27	25-80-00-03	-004	01
9914795-113	25-80-00-03	-012	01	9914795-28	25-80-00-04	-004	01
9914795-114	25-80-00-02	-075	01	9914795-29	25-80-00-03	-007	01
9914795-115	25-80-00-03	-015	01	9914795-3	25-80-00-01	-081	01
9914795-116	25-80-00-02	-076	01	9914795-30	25-80-00-04	-007	01
9914795-117	25-80-00-03	-011	01	9914795-31	25-80-00-03	-003	01
9914795-118	25-80-00-09	-231	01	9914795-32	25-80-00-04	-003	01
9914795-119	25-80-00-03	-016	01	9914795-33	25-80-00-03	-002	01
9914795-12	25-80-00-01	-152	01	9914795-34	25-80-00-04	-002	01
9914795-120	25-80-00-09	-005	02	9914795-35	25-80-00-03	-008	01
9914795-121	25-80-00-03	-010	01	9914795-36	25-80-00-04	-008	01
9914795-122	25-80-00-09	-011	01	9914795-37	25-80-00-01	-088	01
9914795-123	25-80-00-03	-017	01	9914795-38	25-80-00-01	-163	01
9914795-124	25-80-00-09	-018	02	9914795-39	25-80-00-03	-001	01
9914795-125	25-80-00-01	-004	01	9914795-4	25-80-00-01	-156	01
9914795-127	25-80-00-01	-002	01	9914795-40	25-80-00-04	-001	01
9914795-128	25-80-00-08	-004	01	9914795-41	25-80-00-03	-009	01
9914795-129	25-80-00-01	-014	01	9914795-42	25-80-00-04	-009	01
9914795-13	25-80-00-01	-080	01	9914795-43	25-80-00-05	-029	01
9914795-131	25-80-00-01	-012	01	9914795-44	25-80-00-04	-010	01
9914795-133	25-80-00-01	-010	01	9914795-45	25-80-00-05	-030	01
9914795-135	25-80-00-01	-008	01	9914795-46	25-80-00-04	-015	01
9914795-137	25-80-00-01	-018	01	9914795-47	25-80-00-05	-031	01
9914795-138	25-80-00-01	-006	01	9914795-48	25-80-00-04	-014	01
9914795-139	25-80-00-01	-016	01	9914795-49	25-80-00-05	-032	01
9914795-14	25-80-00-01	-155	01	9914795-5	25-80-00-01	-082	01
9914795-140	25-80-00-09	-023	01	9914795-50	25-80-00-04	-013	01
9914795-141	25-80-00-02	-001	01	9914795-51	25-80-00-05	-033	01
9914795-143	25-80-00-02	-002	01	9914795-52	25-80-00-04	-012	01
9914795-144	25-80-00-02	-023	01	9914795-53	25-80-00-05	-024	01

© Cessna Aircraft Company

PART NUMBER	CH SEC SUBJ FIG	ITEM	REQ
9914795-54	25-80-00-04	-011	01
9914795-55	25-80-00-05	-025	01
9914795-56	25-80-00-04	-016	01
9914795-57	25-80-00-05	-026	01
9914795-58	25-80-00-04	-021	01
9914795-59	25-80-00-05	-027	01
9914795-6	25-80-00-01	-157	01
9914795-60	25-80-00-04	-022	01
9914795-61	25-80-00-05	-028	01
9914795-62	25-80-00-04	-017	01
9914795-63	25-80-00-04	-023	01
9914795-63	25-80-00-05	-019	01
9914795-64	25-80-00-04	-020	01
9914795-65	25-80-00-05	-020	01
9914795-67	25-80-00-05	-021	01
9914795-68	25-80-00-04	-018	01
9914795-69	25-80-00-05	-022	01
9914795-7	25-80-00-01	-083	01
9914795-70	25-80-00-04	-019	01
9914795-71	25-80-00-05	-023	01
9914795-72	25-80-00-04	-024	01
9914795-73	25-80-00-05	-010	01
9914795-74	25-80-00-01	-003	01
9914795-75	25-80-00-05	-009	01
9914795-76	25-80-00-01	-001	01
9914795-77	25-80-00-05	-008	01
9914795-78	25-80-00-01	-005	01
9914795-79	25-80-00-05	-007	01
9914795-8	25-80-00-01	-158	01
9914795-80	25-80-00-01	-013	01
9914795-81	25-80-00-05	-006	01
9914795-82	25-80-00-01	-009	01
9914795-83	25-80-00-05	-011	01
9914795-84	25-80-00-01	-007	01
9914795-85	25-80-00-05	-012	01
9914795-86	25-80-00-01	-017	01
9914795-87	25-80-00-05	-013	01
9914795-88	25-80-00-01	-015	01
9914795-89	25-80-00-05	-018	01
9914795-9	25-80-00-01	-084	01
9914795-90	25-80-00-01	-019	01
9914795-91	25-80-00-05	-017	01
9914795-92	25-80-00-02	-004	01
9914795-93	25-80-00-05	-016	01
9914795-94	25-80-00-02	-003	01
9914795-95	25-80-00-05	-015	01
9914795-96	25-80-00-02	-009	01
9914795-97	25-80-00-05	-014	01
9914795-98	25-80-00-02	-008	01
9914795-99	25-80-00-05	-001	01
9914799-1	33-10-20-01	-001	01
9914799-10	27-50-00-02	-007	01
9914799-13	33-10-20-01	-015	01
9914799-14	23-50-20-01	-002	01
9914799-15	23-50-20-01	-001	01
9914799-16	33-10-20-01	-006	01
9914799-2	33-10-20-01	-003	01
9914799-4	33-10-20-01	-009	01
9914799-5	33-10-20-01	-010	01
9914799-6	33-10-20-01	-013	01
9914801-4	33-10-10-01	-001	01
9914801-6	33-10-10-01	-003	01

PART NUMBER	CH SEC SUBJ FIG	ITEM	REQ
9914805-2	32-41-20-01	-004	01
9919136-1	35-20-10-01	-009	01
9919136-2	35-20-10-01	-001	05
9919139-1	21-23-25-01	-011	02
9919139-2	21-25-20-01	-027	01
9919139-2	21-25-20-01	-050	01
9919139-3	21-23-25-01	-013	04
9919139-4	21-23-25-01	-012	02
9919141-2	33-10-25-01	-003	01
9919141-3	33-10-25-01	-005	01
9919141-4	33-10-25-01	-006	01
99K37.02	35-20-10-01	-005	04
9A	11-00-00-01	-026	AR
9G1224A4M03	21-28-00-01	-019	01
9K	11-00-00-01	-054	AR
9M	11-00-00-01	-075	AR
A2049	30-10-20-01	-011	03
A3-1262	31-10-20-01	-007	01
A3-1262	31-10-20-01	-008	01
A3-201-02/M	31-10-10-01	-010	01
A352CS	26-21-00-01	-002	NP
A352CS	26-21-00-01	-007	NP
A352GS	26-21-00-01	-001	NP
A352GS	26-21-00-01	-006	NP
A4-1130	32-45-00-01	-026	01
A4-6-270	33-30-10-01	-008	01
A4-6-270	52-40-01-01	-026	01
A420-068077-00	52-70-00-01	-011	01
A4212-2	33-40-35-01	-004	01
A6	11-00-00-01	-112	AR
A60-1-2B3N	21-30-00-01	-014	01
A60-1-2B3N	21-60-00-01	-011	01
A60-1-2B3N	21-60-00-01	-012	01
A6693A	33-30-10-01	-003	01
A7	11-00-00-01	-097	AR
A9002	52-30-00-01	-032	02
A9002	52-40-37-01	-088	02
A9002	52-40-37-01	-236	02
A9C	11-00-00-01	-008	AR
AA1203-04	57-20-05-01	-009	16
AA1203-04	57-20-05-01	-084	12
AA1203-04	57-20-05-02	-009	08
AA1203-04	57-20-05-02	-089	06
AA1203-04	57-20-05-02	-158	04
AA52463-D02	33-30-10-01	-004	01
AC103921	30-10-30-01	-083	01
ADW20-5N(L)	57-10-03-06	-005	01
ADW20-5N(L)	57-20-00-05	-010	01
AE1011925E0161	29-10-00-11	-023	01
AE1011928H0635	73-10-00-02	-004	01
AE1011928K0406	73-10-00-01	-005	01
AE1011928K0644	73-10-00-02	-002	01
AE1011933E0100	29-10-00-11	-175	01
AE1011933E0195	29-10-00-11	-016	01
AE13083-5	26-23-00-01	-005	01
AE30903824	26-20-15-01	-006	01
AE3663868E0140	36-15-00-01	-001	01
AE4973J0450-195	29-10-10-01	-011	01
AE4979J0796-150	29-10-10-01	-162	01
AE5434M0434-205	29-10-10-01	-018	01
AE5437E0092-000	29-10-00-11	-017	01
AE5437E0122-075	29-10-00-11	-022	01

© Cessna Aircraft Company

PART NUMBER	CH SEC SUBJ FIG	ITEM	REQ	PART NUMBER	CH SEC SUBJ FIG	ITEM	REQ
AE5437E0165-070	29-10-00-11	-160	01	AN256-10	28-20-00-02	-008	01
AE5448M0770-157	29-10-10-01	-167	01	AN256-10	28-20-00-02	-035	02
AE5515M0586-213	73-10-00-02	-003	01	AN256-10	28-20-00-02	-039	01
AE5515M0900-270	73-10-00-01	-013	01	AN256-10	28-20-00-02	-088	01
AE5516H0310-345	73-10-00-01	-023	01	AN256-10	28-20-00-02	-117	01
AE5516J0463-170	73-10-00-01	-001	01	AN256-10	28-20-21-01	-020	01
AE5516J0701-103	73-10-00-02	-001	01	AN256-10	28-20-21-01	-081	01
AE5573E0156-170	36-15-00-01	-012	01	AN256-10	28-20-21-01	-105	01
AE6209G0220-270	49-30-00-01	-084	01	AN256-10	28-20-21-01	-158	01
AE6667E0421-340	29-10-10-01	-079	01	AN256-10	28-21-00-02	-004	01
AE6667E0850-115	29-10-10-01	-229	01	AN256-10	28-21-00-02	-010	01
AE712783-1	30-10-30-01	-018	01	AN256-10	28-21-00-02	-016	01
AE82274G	29-10-00-11	-010	02	AN256-10	28-21-00-02	-088	02
AE82274G	32-30-00-02	-161	02	AN256-10	28-21-00-02	-177	01
AE86056E	29-10-00-08	-036	01	AN256-10	28-21-00-02	-181	02
AE86056E	29-10-00-11	-005	04	AN256-10	28-21-00-02	-251	03
AE86056E	29-10-00-11	-163	02	AN256-10	28-21-00-02	-325	02
AE86056G	29-10-00-08	-037	01	AN256-10	28-21-00-02	-338	01
AE86056G	29-10-00-11	-161	02	AN256-10	28-21-00-03	-009	02
AE88938E	78-30-10-01	-017	01	AN256-10	28-21-00-03	-019	02
AE88938E	78-30-10-01	-089	01	AN256-10	28-21-00-03	-036	02
AE88938E	78-30-10-02	-102	02	AN256-10	28-21-00-03	-042	02
AE88938G	78-30-10-01	-082	01	AN256-10	28-21-00-03	-047	04
AE88938G	78-30-10-02	-106	01	AN256-10	28-21-00-03	-079	02
AE88939E	78-30-00-01	-010	02	AN256-10	28-21-00-03	-085	02
AE88939G	78-30-00-01	-011	01	AN256-10	28-21-00-03	-114	02
AFP749J161616	29-10-00-01	-027	01	AN256-10	28-21-00-03	-120	02
AFP749J161616	29-10-10-01	-019	01	AN256-10	28-23-00-01	-007	01
AFP749J161616	29-10-10-01	-168	01	AN256-10	29-10-00-04	-021	02
AN173-10A	27-10-50-01	-315	02	AN256-10	29-10-00-04	-156	01
AN173-11	27-10-50-01	-259	02	AN256-10	29-10-00-04	-321	01
AN173-11	27-36-00-01	-025	01	AN256-10	29-10-00-05	-330	01
AN173-21	27-10-50-01	-319	01	AN256-10	29-10-00-06	-049	07
AN173-6	27-11-20-01	-010	01	AN256-10	29-10-00-06	-202	01
AN173-6	27-11-20-01	-028	02	AN256-10	29-10-00-07	-011	02
AN173-6	27-35-00-02	-016	01	AN256-10	29-10-00-07	-034	04
AN173-6A	27-35-00-02	-024	02	AN256-10	29-10-00-07	-169	01
AN173-7	27-35-00-02	-017	01	AN256-10	29-10-00-10	-042	02
AN173-7	27-36-00-01	-024	01	AN256-10	29-10-00-10	-081	06
AN173CH4A	71-60-00-01	-035	04	AN256-10	29-10-00-10	-154	02
AN174-11	27-36-00-01	-004	01	AN256-10	29-10-00-11	-030	03
AN23-12	32-35-00-01	-018	01	AN256-10	29-10-80-01	-035	02
AN23-13	27-13-05-01	-241	01	AN256-10	29-10-80-01	-160	01
AN23-13	32-43-00-01	-003	01	AN256-10	29-23-05-01	-162	03
AN23-14	27-20-05-01	-101	01	AN256-10	29-23-05-01	-162A	02
AN23-17	32-43-00-01	-032	01	AN256-10	30-40-00-01A	-034	01
AN23-18	27-80-10-01	-015	01	AN256-10	32-30-00-02	-195	02
AN23-25	27-80-10-01	-014	01	AN256-10	32-30-00-03	-089	01
AN23-8	27-13-05-01	-087	01	AN256-10	32-33-00-01	-017	01
AN23-8	27-20-05-01	-076	01	AN256-10	32-33-00-01	-083	02
AN23-8	32-43-00-01	-011	01	AN256-10	32-33-00-01	-168	05
AN24-17	27-80-10-01	-008	01	AN256-10	32-33-00-01	-238	04
AN24-20	27-20-05-01	-095	01	AN256-10	32-43-00-01	-088	02
AN24-31	27-10-50-01	-018	01	AN256-10	32-43-00-02	-021	03
AN25-19	27-10-50-01	-085	02	AN256-10	32-45-00-01	-022	02
AN256-10	27-00-02-01	-081	01	AN256-10	32-49-00-01	-038	03
AN256-10	27-80-00-03	-036	04	AN256-10	32-49-00-02	-024	05
AN256-10	27-80-00-03	-090	06	AN256-10	32-49-00-02	-092	03
AN256-10	28-11-10-01	-019	01	AN256-10	34-10-00-02	-015	01
AN256-10	28-11-10-01	-084	01	AN256-10	36-15-00-01	-047	02
AN256-10	28-11-20-01	-021	02	AN256-10	36-15-00-02	-106	01
AN256-10	28-11-20-01	-085	AR	AN256-10	36-15-00-03	-038	03

© Cessna Aircraft Company

PART NUMBER	CH SEC SUBJ FIG	ITEM	REQ
AN256-10	37-10-00-01	-101	01
AN256-10	49-30-00-01	-021	01
AN256-10	49-30-00-01	-080	01
AN256-10	52-11-00-01	-015	01
AN256-10	53-10-01-01	-027	02
AN256-10	53-15-00-02	-039	01
AN256-10	53-15-00-02	-042	03
AN256-10	53-20-00-01	-087	02
AN256-10	53-20-00-06	-112	01
AN256-10	53-60-00-04	-015	01
AN256-10	78-30-10-01	-105	02
AN256-10	78-30-10-02	-028	01
AN256-10	78-30-10-02	-032	01
AN256-6	24-60-05-01	-024	05
AN256-6	24-60-05-02	-024	05
AN256-8	24-60-05-01	-025	01
AN256-8	24-60-05-02	-025	02
AN256-8	33-30-20-01	-012	01
AN3-10	32-20-00-02	-078	01
AN3-10	36-10-20-01	-041	02
AN3-10A	21-21-00-01	-035	02
AN3-10A	27-21-00-01	-024	03
AN3-10A	30-13-10-01	-004	04
AN3-10A	52-10-22-02	-011	01
AN3-10A	52-11-20-01	-026	01
AN3-10A	71-10-00-01	-260	01
AN3-11	27-13-05-01	-007	01
AN3-11	27-13-05-01	-174	01
AN3-11	27-33-25-01	-002	01
AN3-11	27-60-30-01	-009	02
AN3-11	27-80-10-01	-002	08
AN3-11	32-51-00-01	-003	02
AN3-11A	21-25-00-01	-087	01
AN3-11A	27-20-00-01	-077	01
AN3-11A	30-13-10-01	-030	02
AN3-11A	52-10-03-01	-084	02
AN3-11A	52-10-03-01	-154	01
AN3-12	32-20-00-02	-002	03
AN3-12	52-30-00-01	-020	01
AN3-12A	32-35-00-02	-031	01
AN3-13	52-10-21-01	-151	01
AN3-13	52-10-37-01	-012	02
AN3-14	27-32-00-01	-090	02
AN3-14	27-60-00-01	-173	01
AN3-14	32-43-00-01	-155	01
AN3-14	36-10-20-03	-016	02
AN3-14A	30-10-00-02	-098	04
AN3-14A	71-10-00-01	-251	02
AN3-15A	35-10-20-01	-006	03
AN3-15A	49-30-00-01	-006	02
AN3-15A	57-40-10-01	-319	04
AN3-16A	55-20-10-01	-005	01
AN3-17A	29-10-80-01	-002	02
AN3-17A	29-10-80-01	-090	02
AN3-21A	27-40-00-01	-021	04
AN3-22	27-13-05-01	-151	01
AN3-22	27-13-05-01	-157	01
AN3-22	27-60-30-01	-095	04
AN3-23	27-10-50-01	-251	01
AN3-24A	32-51-35-01	-008	02
AN3-24A	57-40-10-01	-320	04
AN3-26	27-32-00-01	-226	01
AN3-26A	57-40-10-01	-318	08
AN3-27A	29-10-00-04	-255	02
AN3-27A	29-10-00-06	-186	02
AN3-27A	32-49-00-01	-022	03
AN3-35A	52-10-22-01	-013	01
AN3-35A	52-10-22-01	-086	01
AN3-35A	52-10-22-01	-162	01
AN3-3A	21-26-00-01	-034	01
AN3-3A	21-35-00-01	-020	01
AN3-3A	24-20-00-01	-014	01
AN3-3A	24-60-10-01	-249	02
AN3-3A	24-60-10-02	-249	02
AN3-3A	27-10-50-01	-115	04
AN3-3A	27-32-00-01	-095	03
AN3-3A	27-40-00-01	-152	04
AN3-3A	28-20-00-02	-078	01
AN3-3A	32-43-00-01	-081	01
AN3-3A	32-43-00-01	-091	01
AN3-3A	33-40-35-02	-014	03
AN3-3A	37-10-00-01	-093A	01
AN3-3A	37-10-00-01	-100A	01
AN3-3A	37-10-00-01	-109A	01
AN3-3A	49-10-15-01	-003	16
AN3-3A	52-10-00-01	-169	01
AN3-3A	52-10-22-01	-228	02
AN3-3A	55-10-00-01	-033	01
AN3-3A	55-30-00-01	-020	AR
AN3-4	27-35-00-01	-077	01
AN3-4	33-40-35-01	-032	01
AN3-46	27-13-00-01	-013	01
AN3-4A	21-21-00-01	-009	01
AN3-4A	21-21-00-01	-036	01
AN3-4A	21-23-00-01	-080	02
AN3-4A	21-23-00-01	-090	02
AN3-4A	21-25-00-01	-006	01
AN3-4A	21-27-00-01	-002	08
AN3-4A	21-35-00-01	-030	04
AN3-4A	21-50-10-01	-005	14
AN3-4A	21-50-20-01	-006	02
AN3-4A	22-10-10-01	-003	04
AN3-4A	22-10-10-02	-003	04
AN3-4A	25-70-00-01	-002	04
AN3-4A	27-10-15-01	-242	02
AN3-4A	27-10-15-01	-247	02
AN3-4A	27-10-50-02	-160	12
AN3-4A	27-13-00-01	-081	02
AN3-4A	27-50-20-01	-027	02
AN3-4A	28-11-10-01	-152	01
AN3-4A	28-11-20-01	-014	03
AN3-4A	28-11-20-01	-029	02
AN3-4A	28-11-20-01	-083	01
AN3-4A	28-20-00-01	-007	01
AN3-4A	29-23-00-01	-160	06
AN3-4A	30-10-00-01	-014	02
AN3-4A	30-10-00-01	-077	02
AN3-4A	30-10-00-01	-081	02
AN3-4A	30-10-00-01	-088	02
AN3-4A	30-10-00-02	-008	01
AN3-4A	30-10-00-02	-015	01
AN3-4A	30-10-00-02	-084	02
AN3-4A	30-10-00-02	-159	02
AN3-4A	30-10-00-02	-164	02

© Cessna Aircraft Company

PART NUMBER	CH SEC SUBJ FIG	ITEM	REQ	PART NUMBER	CH SEC SUBJ FIG	ITEM	REQ
AN3-4A	30-13-00-01	-011	01	AN3-5A	52-10-22-01	-012	02
AN3-4A	30-13-10-01	-008	02	AN3-5A	52-10-22-01	-085	02
AN3-4A	30-20-00-02	-006	02	AN3-5A	52-10-22-01	-161	02
AN3-4A	32-35-00-02	-017	02	AN3-5A	52-10-22-01	-230	01
AN3-4A	32-43-00-01	-084	03	AN3-5A	53-10-10-01	-026	02
AN3-4A	32-49-00-01	-028	01	AN3-5A	80-10-00-01	-182	04
AN3-4A	32-51-00-01	-041	01	AN3-6	24-35-00-01	-093	02
AN3-4A	33-40-35-02	-015	04	AN3-6	27-33-25-01	-003	01
AN3-4A	33-40-35-02	-039	02	AN3-6	32-45-00-01	-002	01
AN3-4A	35-10-20-01	-103	02	AN3-6	36-10-20-01	-040	02
AN3-4A	36-10-20-02	-084	01	AN3-6	36-10-20-02	-099	01
AN3-4A	36-10-20-04	-030	01	AN3-6	52-40-11-01	-003	02
AN3-4A	36-10-20-04	-091	01	AN3-6	52-40-23-01	-008	02
AN3-4A	36-13-00-01	-012	01	AN3-6	52-40-25-01	-004	01
AN3-4A	36-15-00-02	-038	03	AN3-6	52-40-51-01	-004	01
AN3-4A	37-10-00-01	-097A	01	AN3-6	52-40-51-01	-022	01
AN3-4A	37-10-00-01	-103A	01	AN3-6A	21-21-00-01	-037	01
AN3-4A	52-10-21-01	-076	05	AN3-6A	27-10-15-01	-152	01
AN3-4A	52-10-22-01	-014	01	AN3-6A	27-10-50-01	-096	04
AN3-4A	52-10-22-01	-163	01	AN3-6A	27-10-50-02	-087	03
AN3-4A	52-10-22-01	-227	07	AN3-6A	29-23-05-01	-004	04
AN3-4A	55-10-00-03	-003	03	AN3-6A	30-40-00-01	-002	04
AN3-4A	55-20-10-01	-006	01	AN3-6A	32-43-00-01	-086	01
AN3-4A	77-30-00-01	-002	04	AN3-6A	52-10-13-01	-015	06
AN3-4A	80-10-00-01	-155	04	AN3-6A	52-10-22-01	-009	04
AN3-4A	80-10-00-01	-167	02	AN3-6A	52-10-22-01	-082	02
AN3-4A	80-10-00-01	-175	01	AN3-6A	52-10-22-01	-158	02
AN3-5	35-10-20-01	-007	01	AN3-6A	55-30-00-02	-151	04
AN3-5	52-11-00-01	-006	01	AN3-6A	55-30-00-02	-173	04
AN3-5	52-30-20-01	-082	01	AN3-6A	55-30-00-02	-196	06
AN3-51	36-10-20-03	-077	01	AN3-6A	55-30-00-02	-230	06
AN3-5A	21-23-00-01	-008	01	AN3-6A	55-30-00-02	-239	06
AN3-5A	21-25-00-01	-088	01	AN3-7	27-10-50-01	-151	01
AN3-5A	21-25-00-01	-095	01	AN3-7	27-13-00-01	-024	02
AN3-5A	21-25-00-02	-005	04	AN3-7	27-13-05-01	-018	01
AN3-5A	21-26-00-01	-019	04	AN3-7	27-13-05-01	-242	01
AN3-5A	21-35-00-01	-030A	04	AN3-7	27-60-00-01	-163	02
AN3-5A	21-50-10-01	-036	14	AN3-7	27-60-00-01	-172	02
AN3-5A	22-10-10-01	-053	04	AN3-7	27-60-30-01	-008	04
AN3-5A	22-10-10-02	-041	04	AN3-7	32-20-00-02	-013	02
AN3-5A	24-20-00-01	-012	02	AN3-7	32-20-00-02	-077	01
AN3-5A	24-30-00-01	-018	02	AN3-7	32-20-00-02	-086	02
AN3-5A	27-10-15-01	-228	04	AN3-7A	27-10-50-02	-086	03
AN3-5A	27-10-15-01	-232	02	AN3-7A	27-21-00-01	-023	03
AN3-5A	27-10-50-02	-161	02	AN3-7A	33-40-35-01	-009	01
AN3-5A	27-11-00-01	-028	01	AN3-7A	52-10-22-01	-232	01
AN3-5A	27-20-05-02	-097	02	AN3-7A	52-40-01-01	-002	02
AN3-5A	27-30-05-01	-240	02	AN3-7A	52-40-37-01	-004	01
AN3-5A	27-35-00-01	-023	01	AN3-7A	52-40-37-01	-153	01
AN3-5A	27-37-00-01	-003	02	AN3066-6	23-50-20-01	-035	02
AN3-5A	27-50-00-01	-002	04	AN310-4	53-20-03-01	-008	04
AN3-5A	29-23-05-01	-003	04	AN310-7	57-80-00-01	-026	01
AN3-5A	30-40-00-01A	-002	04	AN310C4	28-21-00-01	-082	01
AN3-5A	32-43-00-01	-085	01	AN315-3R	27-60-00-01	-168	01
AN3-5A	32-51-05-01	-003	02	AN315-3R	27-60-00-01	-179	01
AN3-5A	32-51-35-01	-014	04	AN315-3R	53-10-10-01	-078	01
AN3-5A	33-40-35-01	-010	01	AN315-3R	55-30-10-01	-006	16
AN3-5A	52-10-03-01	-076	02	AN315-4R	36-15-00-02	-098	01
AN3-5A	52-10-11-01	-097	08	AN315-5R	24-60-10-01	-323	AR
AN3-5A	52-10-11-01	-103	06	AN315-5R	24-60-10-02	-322	AR
AN3-5A	52-10-21-01	-033	06	AN315-5R	24-60-15-01	-081	AR
AN3-5A	52-10-21-01	-077	01	AN315-6R	24-60-10-01	-308	02

© Cessna Aircraft Company

PART NUMBER	CH SEC SUBJ FIG	ITEM	REQ
AN315-6R	24-60-10-02	-308	02
AN315-6R	24-60-15-01	-030	02
AN316-4L	53-10-10-01	-023	03
AN316-4L	53-15-00-02	-028	01
AN316-4L	53-15-00-02	-162	01
AN316-4R	21-50-10-01	-019	02
AN316-4R	25-50-15-01	-041	04
AN316-4R	25-80-03-01	-010	02
AN316-4R	25-80-03-01	-031	06
AN316-4R	25-80-03-01	-037	04
AN316-4R	25-80-03-01	-049	04
AN316-4R	25-80-03-01	-087	02
AN316-4R	25-80-03-01	-093	06
AN316-4R	25-80-03-01	-099	04
AN316-4R	25-80-03-01	-122	04
AN316-4R	27-10-30-01	-464	04
AN316-4R	27-10-50-01	-211	01
AN316-4R	27-13-05-01	-236	02
AN316-4R	27-25-00-01	-023	08
AN316-4R	27-36-00-01	-235	02
AN316-4R	29-23-00-01	-084	01
AN316-4R	32-20-00-02	-092	01
AN316-4R	32-30-00-01	-011	02
AN316-4R	32-51-35-01	-018	01
AN316-4R	36-15-00-01	-031	01
AN316-4R	36-15-00-02	-093	01
AN316-4R	52-10-03-01	-028	01
AN316-4R	52-10-11-01	-269	01
AN316-4R	52-10-19-01	-183	01
AN316-4R	52-30-20-01	-032	02
AN316-4R	53-10-10-01	-031	01
AN316-5L	52-10-22-02	-021	01
AN316-5L	52-10-22-02	-038	01
AN316-5L	52-10-22-02	-086	01
AN316-5L	52-10-37-01	-016	01
AN316-5R	27-20-00-01	-124	01
AN316-5R	27-20-00-01	-187	02
AN316-5R	27-25-00-01	-105	01
AN316-5R	27-25-00-01	-168	01
AN316-5R	27-25-00-01	-274	01
AN316-5R	27-25-00-01	-331	01
AN316-5R	27-31-00-01	-011	01
AN316-5R	27-32-00-01	-011	01
AN316-5R	27-32-00-01	-022	01
AN316-5R	27-32-00-01	-162	01
AN316-5R	27-33-00-01	-023	01
AN316-5R	29-23-00-01	-085	01
AN316-5R	32-10-30-01	-082	02
AN316-5R	32-10-30-01	-091	02
AN316-5R	32-30-00-01	-022	01
AN316-5R	32-30-00-01	-092	02
AN316-5R	52-10-22-02	-272	02
AN316-6L	52-10-19-01	-164	01
AN316-6R	27-10-30-01	-540	01
AN316-6R	52-10-19-01	-034	02
AN316-6R	52-10-22-02	-007	02
AN316-7L	52-10-22-02	-156	01
AN316-7L	52-10-22-02	-167	01
AN316-7R	27-20-00-01	-096	01
AN316-7R	36-15-00-01	-003	04
AN316-8R	27-11-00-01	-005	02
AN316C4R	28-21-00-01	-084	01
AN316C4R	32-10-30-01	-014	02
AN316C4R	32-30-00-01	-011A	02
AN316C4R	52-20-00-01	-005	01
AN320-3	27-13-05-01	-091	01
AN320-3	32-30-00-01	-018	01
AN320-3	33-40-35-01	-034	01
AN320-3	52-10-21-01	-153	01
AN320-3	52-30-20-01	-085	01
AN320-4	32-10-00-01	-013	01
AN320-4	32-10-30-01	-078	02
AN320-4	32-10-30-01	-087	01
AN320-4	32-30-00-01	-017	01
AN320-4	32-31-05-01	-032	01
AN320-5	32-31-05-01	-023	01
AN320C3	32-10-30-01	-096	01
AN320C3	32-30-00-01	-018A	01
AN320C3	52-10-21-01	-039	01
AN320C3	52-10-21-01	-089	01
AN320C4	32-30-00-01	-017A	01
AN320C4	57-60-00-01	-016	01
AN320C7	71-00-00-01	-005	02
AN320C8	71-20-00-01	-013	02
AN386-2-13A	27-20-00-01	-152	02
AN386-2-13A	27-20-00-01	-156	03
AN386-2-14A	27-20-00-01	-164	02
AN386-2-14A	27-25-00-01	-076	01
AN386-2-14A	27-25-00-01	-232	01
AN386-2-17A	27-25-00-01	-336	01
AN3C10	32-30-00-01	-013A	01
AN3C10	52-10-21-01	-037	01
AN3C10A	30-13-10-01	-016	02
AN3C11A	30-10-30-01	-005	02
AN3C12A	28-20-21-01	-091	01
AN3C13A	27-50-00-01	-236	01
AN3C13A	27-50-00-01	-311	01
AN3C14A	29-20-05-01	-015	01
AN3C14A	32-33-00-01	-012	01
AN3C14A	71-10-00-01	-174	01
AN3C16A	29-10-30-01	-163	02
AN3C16A	29-10-30-01	-226	02
AN3C16A	29-23-00-01	-386	02
AN3C20A	28-20-30-01	-026	04
AN3C20A	28-23-00-01	-014	04
AN3C21	52-10-21-01	-019	01
AN3C21A	28-20-30-01	-011	04
AN3C21A	28-20-30-01	-086	04
AN3C25A	29-10-00-05	-151	03
AN3C35	52-10-21-01	-088	01
AN3C3A	27-50-00-01	-087	01
AN3C3A	27-50-00-01	-161	01
AN3C3A	27-50-00-01	-241	02
AN3C3A	27-50-00-01	-316	02
AN3C3A	27-50-00-01	-388	01
AN3C3A	27-50-00-01	-461	01
AN3C3A	27-50-00-01	-467	01
AN3C3A	27-80-00-03	-035	02
AN3C3A	27-80-00-03	-089	06
AN3C3A	28-11-10-01	-004	04
AN3C3A	28-11-10-01	-017	01
AN3C3A	28-11-10-01	-082	01
AN3C3A	28-11-10-01	-164	03
AN3C3A	28-11-20-01	-024	02

© Cessna Aircraft Company

PART NUMBER	CH SEC SUBJ FIG	ITEM	REQ
AN3C3A	28-11-20-01	-082	01
AN3C3A	28-11-20-01	-091	01
AN3C3A	28-20-00-03	-021	02
AN3C3A	28-20-00-03	-233	28
AN3C3A	28-20-05-01	-003	12
AN3C3A	28-20-21-01	-156	01
AN3C3A	28-20-21-01	-163	03
AN3C3A	28-20-35-01	-003	04
AN3C3A	28-21-00-02	-081	04
AN3C3A	28-21-00-03	-007	01
AN3C3A	28-21-00-03	-017	01
AN3C3A	28-21-00-03	-027	01
AN3C3A	28-21-00-03	-034	01
AN3C3A	28-21-00-03	-040	01
AN3C3A	28-21-00-03	-045	01
AN3C3A	28-21-00-03	-077	01
AN3C3A	28-21-00-03	-083	01
AN3C3A	28-21-00-03	-111	01
AN3C3A	28-21-00-03	-117	01
AN3C3A	29-10-00-12	-028	06
AN3C3A	29-10-00-12	-161	04
AN3C3A	29-10-00-12	-238	04
AN3C3A	29-10-00-12	-305	06
AN3C3A	29-10-00-12	-320	04
AN3C3A	57-40-00-01	-005	07
AN3C4	29-10-80-01	-098	01
AN3C4A	28-11-30-01	-005	01
AN3C4A	28-11-40-01	-079	02
AN3C4A	28-11-40-01	-084	02
AN3C4A	28-11-40-01	-094	02
AN3C4A	28-21-00-02	-007	01
AN3C4A	28-21-00-02	-013	01
AN3C4A	28-21-00-02	-019	01
AN3C4A	28-21-00-02	-091	02
AN3C4A	28-21-00-02	-175	01
AN3C4A	28-21-00-02	-179	02
AN3C4A	28-21-00-02	-227	01
AN3C4A	28-21-00-02	-249	03
AN3C4A	28-21-00-02	-323	02
AN3C4A	28-21-00-02	-336	01
AN3C4A	30-10-30-01	-004	02
AN3C4A	30-13-10-01	-076	04
AN3C4A	36-10-20-02	-076	16
AN3C4A	73-30-00-01	-007	01
AN3C4A	80-10-00-01	-091	01
AN3C5A	21-50-05-01	-004	02
AN3C5A	21-50-05-01	-009	02
AN3C5A	21-50-05-01	-014	10
AN3C5A	27-50-00-01	-081	04
AN3C5A	27-50-00-01	-156	04
AN3C5A	27-50-00-01	-231	04
AN3C5A	27-50-00-01	-306	04
AN3C5A	27-50-00-01	-381	04
AN3C5A	27-50-00-01	-456	04
AN3C5A	28-11-40-01	-003	02
AN3C5A	28-11-40-01	-007	02
AN3C5A	28-11-40-01	-012	02
AN3C5A	28-11-40-01	-078	02
AN3C5A	28-20-20-01	-017	04
AN3C5A	28-21-00-01	-021	01
AN3C5A	28-21-00-02	-152	04
AN3C5A	28-21-00-02	-183	01
AN3C5A	28-21-00-02	-189	01
AN3C5A	28-21-00-02	-260	03
AN3C5A	28-21-00-02	-330	01
AN3C6A	28-11-10-01	-021	01
AN3C6A	28-11-10-01	-086	01
AN3C6A	28-20-00-03	-087	04
AN3C6A	29-10-80-01	-025	01
AN3C6A	30-13-10-01	-081	02
AN3C6A	52-40-45-01	-002	02
AN3C7	32-35-00-01	-038	01
AN3C7A	30-13-10-01	-024	04
AN3C7A	36-10-20-01	-033	04
AN3H10A	27-20-00-01	-041	02
AN3H11A	27-13-05-01	-166	01
AN3H14A	55-40-00-01	-090	02
AN3H15A	27-13-05-01	-076	01
AN3H15A	27-13-05-01	-096	01
AN3H15A	27-60-30-01	-085	04
AN3H15A	27-60-30-01	-090	02
AN3H3A	38-30-15-01	-005	04
AN3H3A	55-40-00-01	-023	04
AN3H4A	27-33-00-01	-165	04
AN3H4A	27-33-25-01	-011	02
AN3H4A	33-40-35-01	-021	04
AN3H5A	52-10-22-02	-305	01
AN3H7A	27-60-20-01	-163	02
AN4-10	27-80-10-01	-007	01
AN4-10	32-30-00-01	-014	01
AN4-10	32-43-00-01	-028	04
AN4-11	27-13-05-01	-026	01
AN4-11A	27-20-00-01	-078	01
AN4-11A	52-10-11-01	-237	02
AN4-11A	52-10-35-01	-020	02
AN4-12	36-10-20-03	-089	01
AN4-12	52-10-11-01	-178	01
AN4-12A	32-51-00-01	-015	01
AN4-13	32-49-00-01	-078	01
AN4-13A	27-25-00-01	-079	01
AN4-13A	27-25-00-01	-179	01
AN4-13A	27-25-00-01	-235	01
AN4-13A	27-25-00-01	-339	01
AN4-14	52-10-11-01	-163	01
AN4-14A	27-60-00-01	-092	02
AN4-14A	52-10-35-01	-025	01
AN4-15A	52-10-22-01	-006	01
AN4-15A	52-10-22-01	-155	01
AN4-15A	52-10-22-02	-413	04
AN4-16	29-10-30-01	-002	02
AN4-16	52-10-11-01	-225	01
AN4-16A	29-10-30-01	-003	02
AN4-16A	52-10-11-01	-171	01
AN4-17A	52-10-22-01	-008	01
AN4-17A	52-10-22-01	-081	01
AN4-17A	52-10-22-01	-157	01
AN4-21	27-80-10-01	-023	01
AN4-21A	27-80-05-01	-002	06
AN4-22	27-80-10-01	-024	01
AN4-24	32-35-00-01	-077	01
AN4-24A	29-10-07-01	-003	02
AN4-25	27-13-05-01	-227	01
AN4-30A	29-10-30-01	-076	03
AN4-30A	29-10-30-01	-083	03

© Cessna Aircraft Company

PART NUMBER	CH SEC SUBJ FIG	ITEM	REQ	PART NUMBER	CH SEC SUBJ FIG	ITEM	REQ
AN4-31	27-60-00-01	-082	01	AN5-13	52-10-22-02	-034	01
AN4-31	27-60-00-01	-152	01	AN5-13	52-10-22-02	-081	01
AN4-36	27-10-50-01	-260	01	AN5-13	52-10-22-02	-250	01
AN4-3A	52-30-40-01	-004	01	AN5-13	52-10-22-02	-323	01
AN4-4A	26-20-15-01	-010	04	AN5-13	52-10-22-02	-385	02
AN4-5	32-10-30-01	-004	04	AN5-16	27-20-05-02	-076	01
AN4-57A	52-10-35-01	-030	01	AN5-16	27-30-05-01	-231	01
AN4-5A	24-60-10-01	-002	04	AN5-16	27-30-05-01	-254	01
AN4-5A	24-60-10-02	-002	04	AN5-16	27-30-05-01	-274	01
AN4-5A	24-60-15-01	-002	04	AN5-16A	55-10-00-01	-107	01
AN4-5A	26-20-15-01	-003	04	AN5-22A	25-10-01-01	-003	01
AN4-5A	52-10-22-01	-003	01	AN5-55	27-10-50-01	-191	01
AN4-5A	52-10-22-01	-077	02	AN5-6A	24-35-00-01	-020	02
AN4-5A	52-10-22-01	-152	01	AN5-7A	55-10-00-01	-110	02
AN4-6A	21-50-00-01	-003	04	AN502-10-6	27-13-05-01	-005	01
AN4-6A	71-10-00-01	-003	34	AN502-10-8	32-41-20-01	-010	03
AN4-7	32-10-30-01	-084	01	AN503-8-12	32-47-15-01	-002	02
AN4-7A	32-35-00-02	-024	01	AN509-10-10	55-10-00-03	-006	14
AN4-7A	32-51-00-01	-019	01	AN509-10-11	52-10-09-01	-026A	02
AN4-7A	32-51-35-01	-019	01	AN509-10-21	27-25-00-02	-002A	02
AN4-7A	71-10-00-01	-266	02	AN509-10R10	55-10-00-03	-007	14
AN42B-3A	32-43-00-01	-041A	04	AN509-10R11	52-10-09-01	-026B	02
AN42B-4A	32-43-00-01	-162A	02	AN525-10R6	38-30-15-01	-028	08
AN42B-C15	32-43-00-01	-158	01	AN525-10R6	53-30-00-01	-012	AR
AN42B-C4	28-21-00-01	-086	01	AN525-10R6	53-30-00-01	-014	AR
AN42B3A	32-43-00-01	-041	04	AN525-10R6	53-30-00-01	-018	AR
AN42B4A	32-43-00-01	-162	02	AN525-10R6	53-30-00-01	-022	AR
AN4C10	28-21-00-01	-079	01	AN525-10R6	53-30-00-01	-027	AR
AN4C10	32-30-00-01	-014A	01	AN525-10R8	26-21-00-01	-004	04
AN4C10A	29-21-00-01	-004	02	AN525-10R8	38-30-15-01	-003	04
AN4C11A	32-70-00-01	-003	28	AN525-10R8	52-10-19-01	-002	01
AN4C12A	29-21-00-01	-002	02	AN525-416R8	55-40-00-01	-082	04
AN4C14A	29-10-00-08	-009	02	AN525-832R11	21-35-00-01	-018	01
AN4C14A	29-10-00-08	-087	02	AN525-832R12	22-10-10-01	-046	03
AN4C16A	29-10-00-02	-158	02	AN525-832R6	27-32-00-01	-241	03
AN4C16A	29-10-30-01	-157	02	AN525-832R6	27-33-00-01	-158	03
AN4C20A	32-30-15-01	-002	03	AN525-832R7	31-30-00-01	-008	04
AN4C25A	29-21-00-01	-025	03	AN525-832R8	25-50-00-01	-004	10
AN4C26A	28-21-00-02	-235	04	AN525-832R8	25-50-00-01	-011	11
AN4C27A	29-10-30-01	-151	03	AN525-832R8	25-50-00-01	-084	02
AN4C4A	28-21-00-02	-240	04	AN525-832R8	25-50-00-01	-099	07
AN4C5	28-11-55-01	-076	02	AN525-832R8	25-50-00-01	-151	06
AN4C5A	29-23-00-01	-083	01	AN525-832R8	25-50-00-01	-154	06
AN4C5A	32-10-30-01	-004A	04	AN525-832R8	25-50-00-01	-160	05
AN4C6A	28-21-00-02	-095	08	AN525-832R8	25-50-00-01	-162	05
AN4C6A	71-00-00-01	-012	02	AN525-832R8	25-50-00-01	-166	03
AN4C7	32-10-30-01	-084A	01	AN525-832R8	25-50-00-01	-168	05
AN4C7A	28-21-00-02	-078	04	AN525-832R8	25-50-00-01	-170	05
AN4C7A	29-20-05-01	-002	04	AN525-832R8	25-50-00-01	-172	05
AN4C7A	32-70-00-01	-011	28	AN525-832R8	25-50-00-01	-174	05
AN4H10A	32-43-00-01	-024	02	AN525-832R8	25-50-00-01	-176	05
AN4H16A	29-23-00-01	-152	01	AN525-832R8	25-50-00-01	-228	12
AN4H23A	29-23-00-01	-151	01	AN525-832R8	25-50-00-01	-231	01
AN4H23A	32-30-00-01	-006	04	AN525-832R8	25-50-00-01	-234	06
AN4H4A	27-33-00-01	-007	04	AN525-832R8	25-50-00-01	-237	05
AN4H7A	27-20-00-01	-105	01	AN525-832R8	25-50-00-01	-239	09
AN5-12	52-10-22-02	-020	01	AN525-832R8	25-50-00-01	-241	05
AN5-12	52-10-22-02	-029	AR	AN525-832R9	52-11-20-01	-005	14
AN5-12	52-10-22-02	-076	01	AN565A4H4	27-50-00-01	-110	02
AN5-12	52-10-22-02	-251	01	AN565A4H4	27-50-00-01	-168	02
AN5-12	52-10-22-02	-384	02	AN565A4H4	27-50-00-01	-255	02
AN5-13	52-10-03-01	-098	02	AN565A4H4	27-50-00-01	-321	02

© Cessna Aircraft Company

PART NUMBER	CH SEC SUBJ FIG	ITEM	REQ
AN565A4H4	27-50-00-01	-394	02
AN565A4H4	27-50-00-01	-471	02
AN565D4H3	27-14-00-01	-012	02
AN565D8H2	28-21-00-01	-077	01
AN5C4A	29-23-00-01	-245	02
AN5C5A	28-21-00-03	-105	04
AN5C7A	28-21-00-01	-034	04
AN5C7A	28-21-00-02	-157	04
AN6-12	24-30-30-01	-086	01
AN6-22A	27-20-00-01	-020	01
AN6-6A	24-30-00-01	-030	01
AN6289D12	29-10-00-06	-093	01
AN6289D16	29-10-10-01	-015	01
AN6289J10	29-10-00-01	-018	01
AN6289J10	29-10-00-02	-014	01
AN6289J10	29-10-00-04	-313	01
AN6289J10	29-10-00-06	-097	02
AN6289J12	29-10-00-04	-226	01
AN6289J4	29-10-00-08	-014A	01
AN6289J4	29-10-10-01	-078	01
AN6289J4	29-10-10-01	-228	01
AN6289J4	29-21-00-01	-013	01
AN6289J4	32-51-00-01	-078	02
AN6289J4	32-51-05-01	-093	02
AN6289J6	29-10-00-11	-012	04
AN6289J6	32-30-00-02	-156	02
AN6289J6	32-30-00-03	-016	01
AN6289J6	32-30-00-03	-022	02
AN6289J6	32-30-00-03	-037	01
AN6289J6	78-30-10-01	-077	01
AN6289J6	78-30-10-02	-083	01
AN6289J6	78-30-10-02	-087	01
AN6289J8	29-10-10-01	-006	01
AN6289J8	29-10-10-01	-158	01
AN6289J8	29-21-00-01	-021	01
AN6289J8	32-51-05-01	-011	01
AN6H16A	55-40-00-01	-094	08
AN6H16A	55-40-00-01	-099	04
AN6H66A	52-10-22-02	-333	01
AN6H7A	52-10-22-02	-417	02
AN735-12	49-10-00-01	-012	01
AN735D7	21-23-00-01	-151	02
AN737TW107	28-20-05-01	-024	02
AN737TW114	24-20-00-01	-017	02
AN737TW114	24-30-00-01	-021	02
AN737TW56	32-30-00-03	-035	02
AN737TW58	27-80-00-01	-097	09
AN737TW58	27-80-00-02	-022	06
AN737TW58	27-80-00-02	-096	08
AN737TW58	27-80-00-02	-184	06
AN737TW58	27-80-00-03	-013	06
AN737TW58	29-10-00-07	-039	02
AN737TW58	29-10-00-07	-084	05
AN737TW58	29-10-00-07	-172	05
AN737TW58	29-10-00-12	-038	04
AN737TW58	29-10-00-12	-086	08
AN737TW58	29-10-00-12	-153	08
AN737TW58	29-10-00-12	-236	04
AN737TW58	29-10-00-12	-309	06
AN737TW58	32-30-00-02	-121	02
AN737TW58	32-30-00-03	-084	02
AN737TW58	32-33-00-01	-090	01
AN737TW58	32-33-00-01	-177	01
AN737TW58	32-43-00-02	-201	02
AN737TW58	32-49-00-01	-076	01
AN737TW58	32-49-00-02	-029	01
AN737TW66	28-20-70-01	-010	01
AN737TW74	28-20-70-01	-006	01
AN743-12	28-20-00-03	-181	02
AN743-13	21-25-00-01	-092	01
AN743-13	25-10-01-01	-011	01
AN743-13	30-10-00-01	-031	02
AN743-13	30-10-00-02	-011	03
AN743-13	30-20-00-02	-040	02
AN743-13	32-33-00-01	-024	01
AN743-13	32-43-00-01	-090	01
AN743-13	34-10-00-02	-104	01
AN743-13	36-15-00-01	-048	02
AN743-13	36-15-00-02	-049	03
AN743-13	36-15-00-03	-013	01
AN743-13	36-15-00-03	-039	02
AN743-13	36-15-00-03	-106	01
AN743-13	37-10-00-01	-106	02
AN743C13	28-21-00-01	-090	01
AN743C13	73-10-00-02	-017	02
AN8-23	52-10-22-01	-019	01
AN8-23	52-10-22-01	-091	01
AN8-24	52-10-22-01	-245	01
AN8-25	52-10-22-01	-172	01
AN804D5	35-10-20-01	-153	01
AN807-4D	52-11-00-01	-031	01
AN815-4D	52-11-20-01	-018	NP
AN818-4D	21-33-00-01	-028	01
AN818-4D	21-33-00-01	-039	01
AN818-4D	37-10-00-01	-005	01
AN818-6D	28-21-00-02	-271	01
AN818-6D	36-15-00-02	-079	01
AN818-6D	37-10-00-01	-076	02
AN818-8D	36-15-00-02	-009	02
AN818-8D	36-15-00-03	-021	02
AN821-3D	21-23-00-01	-155	01
AN821-4D	34-10-00-01	-010	NP
AN821-4D	35-10-20-01	-100	NP
AN821-4D	36-15-00-01	-006	NP
AN821-4D	71-70-00-01	-018	NP
AN821-4J	36-15-00-02	-109	01
AN821-5D	35-10-00-01	-023	03
AN821-5D	35-10-20-01	-016	01
AN821-6D	36-15-00-02	-161	02
AN824-4D	28-21-00-03	-093	02
AN824-4D	34-10-00-02	-168	01
AN824-4D	35-10-20-01	-014	01
AN824-4D	35-20-00-01	-079	06
AN824-4D	35-20-00-01	-094	01
AN824-4D	36-15-00-01	-022	01
AN824-4D	71-70-00-01	-006	02
AN824-5D	35-10-00-01	-007	01
AN824-5D	35-10-00-01	-015	01
AN824-6D	36-15-00-02	-075	01
AN832-10D	28-11-20-01	-004	02
AN832-10D	28-20-00-03	-098	02
AN832-10J	28-20-00-02	-102	02
AN832-12	26-23-00-01	-012	01
AN832-16J	28-23-00-01	-037	02

© Cessna Aircraft Company

PART NUMBER	CH SEC SUBJ FIG	ITEM	REQ
AN832-4D	21-31-00-01	-004	01
AN832-4D	21-35-00-01	-076	01
AN832-4D	28-21-00-02	-106	02
AN832-4D	28-21-00-03	-002	02
AN832-4D	28-21-00-03	-087	02
AN832-4D	28-21-00-03	-164	02
AN832-4D	34-10-00-02	-158	03
AN832-4D	36-15-00-01	-007	02
AN832-4D	36-15-00-02	-111	01
AN832-4J	49-80-00-01	-008	01
AN832-6	49-30-00-01	-082	01
AN832-6D	28-11-27-01	-001	06
AN832-6D	28-20-00-03	-094	01
AN832-6D	28-21-00-02	-311	02
AN832-6D	28-21-00-03	-090	02
AN832-6D	28-21-00-03	-167	02
AN832-6D	37-10-00-01	-012	01
AN832-6D	37-10-00-01	-081	01
AN833-10D	28-11-30-01	-020	01
AN833-10D	28-20-00-02	-021	02
AN833-10D	28-20-00-02	-036	02
AN833-12D	73-10-00-01	-006	01
AN833-12D	73-10-00-02	-027	01
AN833-4D	21-33-00-01	-032	02
AN833-4D	21-35-00-01	-084	01
AN833-4D	21-35-00-01	-086	01
AN833-4D	28-21-00-01	-004	01
AN833-4D	71-70-00-01	-035	01
AN833-4J	80-10-00-01	-171	01
AN833-5D	35-10-00-01	-002	01
AN833-6D	28-11-30-01	-034	02
AN833-6D	28-21-00-01	-009	02
AN833-6D	34-10-00-02	-079	02
AN833-6D	36-15-00-02	-162	03
AN833-8D	36-15-00-02	-006	01
AN833-8D	73-10-00-02	-022	01
AN837-10D	28-11-30-01	-019	01
AN837-4	27-40-00-01	-089	01
AN837-4D	28-21-00-01	-007	01
AN837-6D	28-11-30-01	-025	02
AN837-6D	36-15-00-02	-077	01
AN837-8D	36-15-00-02	-005	01
AN838-4D	36-15-00-02	-116	01
AN893-121J	29-10-00-01	-019	01
AN893-121J	29-10-00-02	-015	01
AN893-31D	28-20-00-02	-019	02
AN894D6-4	37-10-00-01	-008	01
AN910-2D	21-23-00-01	-084	01
AN910-2D	21-25-00-01	-078	04
AN911-1	36-15-00-02	-088	01
AN911-1D	36-15-00-01	-026	02
AN912-1D	34-10-00-02	-011	02
AN919-3D	21-35-00-01	-036	01
AN919-3D	35-20-00-01	-077	01
AN919-6	49-30-00-01	-003	02
AN919-6D	34-10-00-01	-024	01
AN924-10D	28-11-20-01	-005	02
AN924-10D	28-11-30-01	-002	02
AN924-10D	28-11-30-01	-021	02
AN924-10D	28-20-00-03	-099	02
AN924-10D	29-10-80-01	-006	01
AN924-10D	29-10-80-01	-086	01
AN924-10J	28-20-00-02	-022	02
AN924-10J	28-20-00-02	-103	02
AN924-10J	29-10-00-01	-001	01
AN924-10J	29-10-00-01	-005	01
AN924-10J	29-10-00-02	-004	01
AN924-10J	29-10-00-04	-081	01
AN924-10J	29-10-00-05	-181	01
AN924-10J	29-10-00-06	-082	01
AN924-10J	29-10-10-01	-013	01
AN924-10J	29-10-10-01	-164	01
AN924-4D	21-31-00-01	-002	02
AN924-4D	21-33-00-01	-013	04
AN924-4D	21-33-00-01	-031	02
AN924-4D	21-35-00-01	-078	02
AN924-4D	21-35-00-01	-087	01
AN924-4D	28-11-20-01	-034	02
AN924-4D	28-21-00-01	-005	02
AN924-4D	28-21-00-02	-107	02
AN924-4D	28-21-00-03	-004	02
AN924-4D	28-21-00-03	-012	02
AN924-4D	28-21-00-03	-089	02
AN924-4D	28-21-00-03	-166	02
AN924-4D	34-10-00-02	-159	03
AN924-4D	36-15-00-02	-112	02
AN924-4D	52-11-00-01	-021	01
AN924-4D	52-11-00-01	-032	01
AN924-4D	71-70-00-01	-036	01
AN924-6D	28-11-27-01	-003	06
AN924-6D	28-11-30-01	-026	02
AN924-6D	28-11-30-01	-037	02
AN924-6D	28-20-00-03	-096	01
AN924-6D	28-20-60-01	-003	01
AN924-6D	28-20-65-01	-003	01
AN924-6D	28-21-00-01	-010	02
AN924-6D	28-21-00-02	-269	01
AN924-6D	28-21-00-02	-313	02
AN924-6D	28-21-00-03	-092	02
AN924-6D	28-21-00-03	-169	02
AN924-6D	34-10-00-02	-078	02
AN924-6D	36-15-00-02	-078	01
AN924-6D	36-15-00-02	-165	03
AN924-6D	37-10-00-01	-013	01
AN924-6D	37-10-00-01	-084	01
AN924-6D	53-20-00-01	-015	01
AN924-8J	36-15-00-02	-010	01
AN924-8J	36-15-00-03	-098	01
AN929-16J	28-23-00-01	-040	02
AN929-4	36-15-00-02	-026	01
AN929-4W	35-20-00-01	-080	02
AN929-6	21-23-00-01	-085	01
AN929-6	21-25-00-01	-080	04
AN929A20	53-20-00-01	-012	01
AN929A6	53-20-00-01	-016	01
AN936A616	21-30-00-01	-020	01
AN938D10	28-20-00-02	-020	02
AN938J4	29-10-00-04	-003	01
AN938J4	29-10-00-05	-233	01
AN938J4	32-51-00-01	-095	01
AN938J8	36-15-00-03	-081	01
AN970-3	27-10-50-01	-201	02
AN970-3	27-40-00-01	-153	04
AN970-3	32-43-00-01	-033	04

© Cessna Aircraft Company

PART NUMBER	CH SEC SUBJ FIG	ITEM	REQ
AN970-3	36-10-20-03	-079	02
AN970-3	52-11-20-01	-006	05
AN970-4	53-20-03-01	-006	10
AN970-6	29-10-80-01	-174	02
AN970-9	49-10-00-01	-003	03
AN975-3	27-20-00-01	-153	02
AN975-3	27-20-00-01	-157	03
AN975-3	27-20-00-01	-165	02
AN975-3	27-25-00-01	-077	01
AN975-3	27-25-00-01	-233	01
AN975-3	27-25-00-01	-337	01
ANL-150	24-60-10-01	-028B	01
ANL130	24-60-10-01	-028A	01
ANL130	24-60-10-01	-314	01
ANL130	24-60-10-02	-028A	01
ANL130	24-60-10-02	-314	01
ANL130	24-60-15-01	-031	01
ANL130	24-60-15-01	-032	01
ANL150	24-60-10-01	-315	01
ANL40	24-60-10-01	-028C	03
ANL40	24-60-10-01	-311	01
ANL40	24-60-10-01	-312	01
ANL40	24-60-10-01	-313	01
ANL40	24-60-10-01	-316	01
ANL40	24-60-10-01	-317	01
ANL40	24-60-10-01	-318	01
ANL40	24-60-10-02	-028C	03
ANL40	24-60-10-02	-311	01
ANL40	24-60-10-02	-312	01
ANL40	24-60-10-02	-313	01
ANL40	24-60-10-02	-315	01
ANL40	24-60-10-02	-316	01
ANL40	24-60-10-02	-317	01
ANL60	24-60-10-02	-028B	01
ANL60	24-60-15-01	-033	01
ANL60	24-60-15-01	-034	01
AP	11-00-00-01	-088	AR
ARY4	27-32-00-01	-021	01
AS1007T0406	29-10-00-08	-029	01
AS1007T0406	29-10-00-11	-026	01
AS101-01	23-15-05-01	-021	02
AS101-01	23-15-45-01	-005	02
AS101-01	34-47-00-01	-018	04
AS101-01	34-51-10-01	-005	04
AS101-01	34-57-00-01	-080	02
AS101-02	23-11-10-01	-005	01
AS101-02	25-60-00-01	-024	01
AS1034D0404	34-10-00-01	-010A	02
AS1034D0404	35-10-20-01	-100A	02
AS1034D0404	36-15-00-01	-006A	01
AS1034D0404	71-70-00-01	-018A	01
AS1034D0504	35-20-00-01	-095	01
AS1037HJ1008	38-30-10-01	-003	01
AS115-04K0062	32-43-00-02	-226	02
AS115-04K0064	32-43-00-02	-225	02
AS115-04K0066	32-49-00-03	-080	02
AS115-04K0147	27-80-00-02	-159	02
AS115-04K0166	27-80-00-03	-096	01
AS115-04K0166	27-80-00-03	-097	01
AS115-04K0172	27-80-00-02	-193	01
AS115-04K0172	27-80-00-02	-194	01
AS115-04K0193	27-80-00-02	-195	01
AS115-04K0193	27-80-00-02	-196	01
AS115-04K0201	27-80-00-02	-161	02
AS115-06K0106	32-30-00-02	-173	01
AS115-06K0124	32-30-00-03	-053	01
AS115-12K0344	29-10-00-05	-310	01
AS116-04K0091	29-10-00-12	-250	01
AS116-04K0156	29-10-00-12	-174	01
AS116-04K0163	29-10-00-08	-021	01
AS116-04K0166	32-51-00-01	-075	01
AS116-04K0171	32-51-00-01	-076	01
AS116-04K0177	29-10-00-11	-076	01
AS116-04K0183	29-23-00-01	-077	01
AS116-06K0092	29-23-00-01	-075	01
AS116-06K0130	32-30-00-03	-052	01
AS116-06K0154	29-10-00-08	-038	01
AS116-06K0166	32-30-00-03	-019	01
AS116-06K0166	32-30-00-03	-020	01
AS116-06K0171	29-10-00-11	-078	01
AS116-06K0177	29-10-00-11	-077	01
AS117-04K0077	29-10-00-12	-326	01
AS117-04K0092	29-10-00-12	-325	01
AS117-04K0122	29-10-00-12	-339	01
AS117-04K0134	29-10-00-08	-052	01
AS117-04K0137	29-10-00-08	-053	01
AS117-04K0137	32-43-00-02	-253	02
AS117-04K0142	29-10-00-12	-340	01
AS117-06K0105	32-30-00-02	-164	02
AS117-06K0124	32-30-00-02	-171	01
AS118E133K180	29-10-00-12	-175	01
AS118E143K154	29-10-00-12	-176	01
AS118E153K180	29-10-00-12	-177	01
AS118E197K180	29-10-00-11	-075	01
AS118E204K180	29-10-00-08	-022	01
AS118G191K180	29-10-00-08	-039	01
AS118J276K140	29-10-00-05	-173	01
AS119E074K356	29-10-00-12	-251	01
AS119E083K007	29-10-00-12	-253	01
AS119E084K000	29-10-00-12	-252	01
AS119E085K330	29-10-00-12	-327	01
AS119E097K050	29-10-00-05	-230	01
AS119E102K028	29-10-00-12	-328	01
AS119E132K270	29-10-00-12	-183	01
AS119E133K342	29-10-00-12	-338	01
AS119E142K000	32-49-00-03	-094	02
AS119E150K015	29-10-00-12	-337	01
AS119E152K000	32-43-00-02	-254	02
AS119E191K225	27-80-00-03	-095	01
AS119E192K135	27-80-00-03	-094	01
AS119G192K260	29-10-00-05	-229	01
AS119H186K000	29-10-00-05	-227	01
AS119J220K250	29-10-00-05	-312	01
AS120E105K270	29-10-00-05	-239	01
AS120E147K095	29-10-00-12	-180	01
AS120E147K260	29-10-00-12	-181	01
AS120E152K166	29-10-00-12	-182	01
AS15002-1-C	32-10-00-01	-094	01
AS15002-1-P	32-10-00-01	-020	01
AS15002-1-P	32-10-00-01	-080	01
AS15002-3-P	32-10-00-01	-022	01
AS3085-220	79-20-00-01	-002	01
AS3085-235	79-20-00-01	-003	02
AS3209-012	21-23-00-01	-025	02

© Cessna Aircraft Company

PART NUMBER	CH SEC SUBJ FIG	ITEM	REQ
AS3209-016	73-30-00-01	-002	02
AS3582-015	30-10-20-01	-081	02
AS3582-015	38-32-05-01	-008	01
AS3582-015	38-32-10-01	-017	01
AS3582-222	21-70-05-01	-006	01
AS3582-222	30-10-30-01	-015	01
AS3582-226	21-70-05-01	-009	01
AS3582-226	36-10-20-04	-007	04
AS3582-230	80-10-00-01	-162	01
AS3582-230	80-10-00-01	-180	02
AS4099-04	29-23-00-01	-156	01
AS4099-04	29-23-00-01	-234	01
AS4099-04	29-23-00-01	-304	01
AS4099-06	29-23-00-01	-099	01
AS4099-06	29-23-00-01	-231	01
AS4130T0404	27-80-00-02	-156	04
AS4130T0404	27-80-00-02	-190	04
AS4130T0404	27-80-00-03	-025	04
AS4130T0404	27-80-00-03	-091	02
AS4130T0404	29-10-00-08	-027	01
AS4130T0404	29-10-00-11	-007	04
AS4130T0404	29-10-00-11	-027	01
AS4130T0404	29-10-00-12	-322	04
AS4130T0404	32-33-00-01	-075	03
AS4130T0404	32-43-00-02	-183	04
AS4130T0404	32-49-00-03	-008	02
AS4130T0404	32-51-00-01	-113	01
AS4130T0406	29-10-00-11	-015	03
AS4130T0604	29-10-00-08	-028	01
AS4130T0604	32-30-00-02	-151	02
AS4130T0606	29-10-00-11	-025	01
AS4130T0606	32-30-00-02	-175	02
AS4130T0606	32-30-00-03	-030	01
AS4130T1010	29-10-00-04	-080	01
AS4130T1212	29-10-00-04	-083	01
AS4132T0404	27-80-00-03	-091A	02
AS4132T0404	29-10-00-01	-162	01
AS4132T0404	29-10-00-02	-161	01
AS4132T0404	29-10-00-11	-079	02
AS4132T0404	29-10-00-11	-191	01
AS4132T0404	32-33-00-01	-097	01
AS4132T0404	32-43-00-02	-086	01
AS4132T0404	32-51-00-01	-082	01
AS4132T0404	32-51-00-01	-092	01
AS4132T0404	32-51-05-01	-079	01
AS4132T0406	29-10-00-11	-082	02
AS4132T0406	29-10-00-11	-192	01
AS4132T0406	29-23-00-01	-024	01
AS4132T0606	29-10-00-04	-075	01
AS4132T0606	29-10-00-06	-169	01
AS4132T0606	32-30-00-02	-180	02
AS4132T0606	32-30-00-03	-001	04
AS4132T0804	32-51-05-01	-008	01
AS4132T0808	29-10-00-04	-088	01
AS4132T1010	29-10-00-06	-078	02
AS4133T040404	29-10-00-07	-017	01
AS4133T040404	29-10-00-07	-157	01
AS4133T040404	29-10-00-08	-003	04
AS4133T040404	29-10-00-08	-083	02
AS4133T040404	32-33-00-01	-387	01
AS4133T040404	32-43-00-02	-165	02
AS4133T040404	32-49-00-03	-013	01
AS4133T040404	32-51-00-01	-112	01
AS4133T060404	29-10-00-07	-016	01
AS4133T060404	29-10-00-07	-156	01
AS4133T060406	32-30-00-02	-009	01
AS4133T060604	29-23-00-01	-229	01
AS4133T060608	32-30-00-02	-098	02
AS4133T080608	32-30-00-02	-081	02
AS4133T080804	29-10-00-04	-039	01
AS4133T080804	29-10-00-04	-241	01
AS4133T080804	29-10-00-06	-018	02
AS4133T100610	29-10-00-05	-315	01
AS4133T100812	29-10-00-06	-026	01
AS4133T120812	29-10-00-05	-311	01
AS4134T040404	29-10-00-12	-171	04
AS4134T040404	29-10-00-12	-240	04
AS4134T040406	29-10-00-11	-190	01
AS4134T040406	29-23-00-01	-027	01
AS4134T040604	29-10-00-09	-029	01
AS4134T040806	29-10-00-09	-021	01
AS4134T060406	29-10-00-12	-007	01
AS4134T060604	29-10-00-09	-003	01
AS4134T060606	29-10-00-10	-174	01
AS4134T060606	29-10-00-12	-008	01
AS4134T060806	29-10-00-09	-011	01
AS4134T101004	29-10-00-01	-006	01
AS4134T101004	29-10-00-02	-003	01
AS4134T121208	29-10-00-04	-225	01
AS4135T040404	29-10-00-11	-045	02
AS4135T040406	29-10-00-11	-042	02
AS4135T040406	78-30-10-02	-084	01
AS4135T060404	29-10-00-04	-014	01
AS4135T060404	29-10-00-06	-004	01
AS4135T080406	29-10-00-04	-006	01
AS4135T080406	29-10-00-06	-003	01
AS4137T0404	29-10-00-02	-151	01
AS4137T0404	29-10-00-08	-085	01
AS4137T0404	29-23-00-01	-392	01
AS4137T0404	32-49-00-01	-013	01
AS4137T1010	29-10-00-02	-079	01
AS4138J0808	36-15-00-03	-097	01
AS4138T0404	27-80-00-01	-002	04
AS4138T0404	27-80-00-03	-101	02
AS4138T0404	29-10-00-01	-038	01
AS4138T0404	29-10-00-02	-035	01
AS4138T0404	29-10-00-04	-174	01
AS4138T0404	29-10-00-04	-249	01
AS4138T0404	29-10-00-04	-259	01
AS4138T0404	29-10-00-05	-242	01
AS4138T0404	29-10-00-05	-327	01
AS4138T0404	29-10-00-06	-180	03
AS4138T0404	29-10-00-08	-013	04
AS4138T0404	29-10-00-08	-084	09
AS4138T0404	29-10-80-01	-022	01
AS4138T0404	29-10-80-01	-094	01
AS4138T0404	29-20-05-01	-008	01
AS4138T0404	29-23-00-01	-235	01
AS4138T0404	29-23-00-01	-383	01
AS4138T0404	29-23-05-01	-022	02
AS4138T0404	29-23-05-01	-083	01
AS4138T0404	29-23-05-01	-090	01
AS4138T0404	32-30-00-02	-002	01
AS4138T0404	32-30-00-02	-170	02

© Cessna Aircraft Company

PART NUMBER	CH SEC SUBJ FIG	ITEM	REQ
AS4138T0404	32-43-00-02	-002	02
AS4138T0404	32-43-00-02	-156	02
AS4138T0404	32-43-00-02	-230	04
AS4138T0404	32-47-00-01	-002	04
AS4138T0404	32-49-00-01	-010	01
AS4138T0404	32-49-00-03	-077	02
AS4138T0404	32-51-05-01	-078	01
AS4138T0404	78-30-10-01	-014	01
AS4138T0404	78-30-10-01	-085	01
AS4138T0404	78-30-10-02	-091	01
AS4138T0604	29-10-00-07	-006	02
AS4138T0604	78-30-10-01	-007	01
AS4138T0606	32-47-00-01	-006	02
AS4138T1010	29-10-00-04	-165	01
AS4138T1010	29-10-00-05	-305	01
AS4138T1010	29-10-10-01	-009	01
AS4138T1010	29-10-80-01	-008	01
AS4139T040404	29-10-00-05	-170	01
AS4139T040404	29-10-00-08	-082	02
AS4139T040404	29-23-00-01	-236	01
AS4139T040404	29-23-00-01	-377	01
AS4139T040404	32-43-00-02	-188	02
AS4139T040404	32-49-00-01	-012	01
AS4139T100804	29-10-00-05	-157	01
AS4139T101006	29-21-00-01	-027	01
AS4139T101010	29-10-00-04	-162	01
AS4139T121212	29-10-00-04	-111	01
AS4140T040404	32-33-00-01	-380	01
AS4140T040404	32-51-05-01	-096	01
AS4140T040405	29-23-05-01	-084	01
AS4140T060604	32-30-00-03	-017	01
AS4140T161016	29-10-00-01	-031	01
AS4140T161016	29-10-00-02	-026	01
AS4141T04040808	32-30-00-02	-096	01
AS4407D0404	34-10-00-01	-026	01
AS4857D01	35-10-20-01	-027	01
AS4857D01	35-10-20-01	-157	01
AS4859D02	34-10-00-02	-010	02
AS5169D04L	80-10-00-01	-079	01
AS5169D06	28-20-00-03	-090	01
AS5169J04	30-10-00-01	-020	02
AS5169J06L	29-20-05-01	-018	01
AS5174-0303	21-23-00-01	-158	02
AS5174-0404	27-40-00-01	-081	01
AS5174-1010	28-20-00-02	-119	02
AS5174D0403	49-10-20-01	-013	01
AS5174D0404	21-35-00-01	-083	01
AS5174D0404	28-11-20-01	-033	02
AS5174D0404	28-21-00-02	-002	01
AS5174D0404	28-21-00-02	-008	01
AS5174D0404	28-21-00-02	-014	01
AS5174D0404	28-21-00-02	-085	02
AS5174D0404	28-21-00-02	-277	01
AS5174D0404	28-21-00-02	-326	03
AS5174D0404	28-21-00-03	-031	04
AS5174D0404	28-21-00-03	-150	06
AS5174D0404	28-21-00-03	-177	02
AS5174D0404	34-10-00-02	-157	06
AS5174D0404	35-20-00-01	-084	03
AS5174D0404	36-15-00-01	-010	04
AS5174D0404	49-10-20-01	-003	02
AS5174D0404	52-11-00-01	-034	01
AS5174D0404	52-11-20-01	-018B	01
AS5174D0504	21-35-00-01	-005	01
AS5174D0505	35-10-00-01	-013	02
AS5174D0505	35-20-00-01	-004	02
AS5174D0505	35-20-00-01	-076	01
AS5174D0602	28-21-00-02	-273	01
AS5174D0602	28-21-00-03	-013	02
AS5174D0604	28-21-00-01	-008	01
AS5174D0604	28-21-00-01	-015	02
AS5174D0604	28-21-00-02	-266	03
AS5174D0604	28-21-00-02	-307	01
AS5174D0604	28-21-00-03	-095	02
AS5174D0604	28-21-00-03	-176	02
AS5174D0604	36-15-00-01	-075	01
AS5174D0606	28-20-00-03	-092	01
AS5174D0606	28-21-00-02	-256	04
AS5174D0606	28-21-00-02	-341	01
AS5174D0606	28-21-00-03	-049	04
AS5174D0606	28-21-00-03	-151	06
AS5174D0606	34-10-00-02	-004	02
AS5174D0606	34-10-00-02	-081	04
AS5174D0606	36-15-00-01	-080	12
AS5174D0606	36-15-00-02	-022	01
AS5174D0606	36-15-00-02	-153	04
AS5174D0606	37-10-00-01	-087	01
AS5174D0606	49-30-00-01	-012	04
AS5174D0606	49-30-00-01	-076	01
AS5174D0606	49-30-00-01	-085	01
AS5174D0804	21-21-00-01	-028	02
AS5174D0808	73-10-00-01	-024	01
AS5174D1010	28-20-00-02	-028	02
AS5174D1010	73-10-00-01	-002	01
AS5174D1010	73-10-00-02	-025	01
AS5174D1616	28-20-00-02	-037	02
AS5174J0404	30-10-00-01	-009	02
AS5178-04	27-40-00-01	-091	01
AS5178-04	49-80-00-01	-009	01
AS5178-06	49-30-00-01	-083	01
AS5178-10	38-30-10-01	-004	01
AS5178-12	26-23-00-01	-013	01
AS5178J04	27-80-00-01	-077	04
AS5178J04	27-80-00-02	-003	08
AS5178J04	27-80-00-02	-077	08
AS5178J04	27-80-00-02	-158	04
AS5178J04	27-80-00-02	-192	04
AS5178J04	27-80-00-03	-003	08
AS5178J04	27-80-00-03	-027	04
AS5178J04	27-80-00-03	-077	08
AS5178J04	27-80-00-03	-093	04
AS5178J04	29-10-00-01	-163	01
AS5178J04	29-10-00-02	-153	01
AS5178J04	29-10-00-02	-162	01
AS5178J04	29-10-00-04	-015	01
AS5178J04	29-10-00-06	-008	01
AS5178J04	29-10-00-08	-033	05
AS5178J04	29-10-00-09	-023	01
AS5178J04	29-10-00-09	-031	01
AS5178J04	29-10-00-10	-025	01
AS5178J04	29-10-00-10	-179	01
AS5178J04	29-10-00-11	-008	11
AS5178J04	29-10-00-11	-046	02
AS5178J04	29-10-00-11	-080	04

© Cessna Aircraft Company

PART NUMBER	CH SEC SUBJ FIG	ITEM	REQ
AS5178J04	29-10-00-11	-194	04
AS5178J04	29-10-00-12	-003	05
AS5178J04	29-10-00-12	-089	06
AS5178J04	29-10-00-12	-173	04
AS5178J04	29-10-00-12	-242	04
AS5178J04	29-10-00-12	-245	08
AS5178J04	29-10-00-12	-324	04
AS5178J04	29-10-00-12	-336	04
AS5178J04	29-10-09-01	-151	01
AS5178J04	29-10-09-01	-229	01
AS5178J04	29-10-10-01	-081	01
AS5178J04	29-10-10-01	-231	01
AS5178J04	29-23-00-01	-026	02
AS5178J04	29-23-00-01	-173	01
AS5178J04	29-23-00-01	-227	01
AS5178J04	29-23-05-01	-154	01
AS5178J04	32-33-00-01	-096	02
AS5178J04	32-33-00-01	-159	01
AS5178J04	32-33-00-01	-377	01
AS5178J04	32-43-00-02	-088	02
AS5178J04	32-43-00-02	-162	04
AS5178J04	32-43-00-02	-185	04
AS5178J04	32-43-00-02	-232	08
AS5178J04	32-43-00-02	-257	04
AS5178J04	32-43-00-02	-261	04
AS5178J04	32-49-00-02	-006	01
AS5178J04	32-49-00-02	-098	01
AS5178J04	32-49-00-03	-010	02
AS5178J04	32-49-00-03	-079	02
AS5178J04	32-49-00-03	-097	02
AS5178J04	32-49-00-03	-101	02
AS5178J04	32-51-00-01	-085	02
AS5178J04	32-51-00-01	-094	02
AS5178J04	32-51-05-01	-080	01
AS5178J04	78-30-10-01	-015	01
AS5178J04	78-30-10-01	-087	01
AS5178J04	78-30-10-02	-100	02
AS5178J04	80-10-00-01	-172	01
AS5178J06	29-10-00-04	-007	02
AS5178J06	29-10-00-04	-076	01
AS5178J06	29-10-00-06	-007	01
AS5178J06	29-10-00-06	-171	01
AS5178J06	29-10-00-08	-034	01
AS5178J06	29-10-00-09	-005	01
AS5178J06	29-10-00-09	-013	01
AS5178J06	29-10-00-10	-005	11
AS5178J06	29-10-00-10	-011	01
AS5178J06	29-10-00-10	-021	01
AS5178J06	29-10-00-10	-176	01
AS5178J06	29-10-00-10	-182	01
AS5178J06	29-10-00-10	-188	01
AS5178J06	29-10-00-11	-043	02
AS5178J06	29-10-00-12	-006	03
AS5178J06	29-10-00-12	-010	02
AS5178J06	29-10-00-12	-092	02
AS5178J06	32-30-00-02	-031	02
AS5178J06	32-30-00-02	-163	02
AS5178J06	32-30-00-02	-177	02
AS5178J06	32-30-00-02	-182	02
AS5178J06	32-30-00-03	-004	04
AS5178J06	32-30-00-03	-056	02
AS5178J06	78-30-10-01	-080	01
AS5178J06	78-30-10-02	-104	01
AS5178J08	29-10-00-01	-043	01
AS5178J08	29-10-00-01	-088	01
AS5178J08	29-10-00-02	-092	01
AS5178J08	29-10-00-04	-089	01
AS5178J08	32-30-00-02	-088	02
AS5178J12	29-10-00-04	-084	01
AS5178J16	28-20-00-02	-095	04
AS5178J16	29-10-00-01	-028	01
AS5178J16	29-10-10-01	-020	01
AS5178J16	29-10-10-01	-169	01
AS5178W05	35-10-00-01	-005	01
AS5178W05	35-10-20-01	-156	01
AS5178W05	36-15-00-01	-034	01
AS5178W05	36-15-00-02	-097	01
AS5178W08	29-10-00-02	-084	01
AS5178W08	29-10-00-06	-161	01
AS5178W08	36-15-00-02	-008	02
AS5178W08	73-10-00-02	-023	01
AS5178W12	26-20-30-01	-010	02
AS5178W12	29-10-00-06	-081	01
AS5178W12	29-10-80-01	-013	01
AS5178W12	29-10-80-01	-079	01
AS5178W12	73-10-00-01	-007	01
AS5178W12	73-10-00-02	-028	01
AS5178W16	28-23-00-01	-038	02
AS5179J04	29-10-00-12	-186	04
AS5179J04	29-10-00-12	-256	01
AS5179J04	29-10-00-12	-256A	02
AS5179J04	29-10-00-12	-331	04
AS5179J04	29-23-00-01	-176	01
AS5179J04	29-23-00-01	-311	01
AS5179J04	29-23-00-01	-379	01
AS5179J04	32-33-00-01	-076	02
AS5179J06	32-31-25-01	-005	02
AS5183D0402	52-11-00-01	-008	01
AS5194D0402	21-35-00-01	-032	01
AS5194D0402	36-15-00-01	-023	04
AS5194D0402	36-15-00-02	-087	01
AS5194D0604	21-23-00-01	-086	01
AS5194D0604	21-25-00-01	-079	04
AV24A4001-1	28-21-00-02	-238	01
AW6T23	25-50-00-01	-015	02
B	11-00-00-01	-023	AR
B-3550-25-307	33-30-10-01	-011	01
B4209	33-40-35-01	-005	01
B7070	32-51-05-01	-032	01
BC0500-14-S	27-25-00-02	-014	32
BI2-EG08-AN6X	27-11-00-01	-022	01
BI2-EG08-AN6X	52-70-00-01	-008	01
BJ78	53-23-00-03A	-024	01
BJR5-80SSSE	25-50-00-01	-076	02
BL101-8-1	29-10-00-11	-004	AR
BL101-8-1	29-10-00-11	-018	AR
BL101-8-1	29-10-00-11	-020	AR
BL101-8-1	29-10-00-11	-024	AR
BMT101-01	23-11-10-01	-004	01
BMT101-01	23-15-45-01	-007	01
BMT101-01	23-15-45-01	-008	01
BMT101-01	25-60-00-01	-027	01
BMT101-01	34-47-00-01	-014	01
BMT101-01	34-47-00-01	-015	01

© Cessna Aircraft Company

PART NUMBER	CH SEC SUBJ FIG	ITEM	REQ
BMT101-01	34-47-00-01	-016	01
BMT101-01	34-47-00-01	-017	01
BMT101-01	34-51-10-01	-006	01
BMT101-01	34-51-10-01	-007	01
BMT101-01	34-51-10-01	-008	01
BMT101-01	34-51-10-01	-009	01
BMT101-01	34-57-00-01	-081	01
BMT101-01	34-57-00-01	-082	01
BSOS-440-12	27-50-20-01	-007	04
BWT10-2180140A	21-23-20-01	-035	02
BWT10-2320070A	21-23-20-01	-002	02
BWT12-4080110A	21-25-00-02	-016	01
BWT12-4200110A	21-25-00-02	-014	01
BWT12-4200112A	21-25-00-02	-009	01
BWT12-4200121A	21-25-00-02	-010	01
BWT12-4200202A	21-25-00-02	-011	01
BWT12-4200222A	21-25-00-02	-012	05
BWT12-4200240A	21-25-00-02	-013	01
BWT12-4220161A	21-25-00-02	-025	01
BWT12-4220592K	21-25-00-02	-027	02
BWT12-4220602K	21-25-00-02	-028	01
BWT12-4220621A	21-25-00-02	-026	01
C	11-00-00-01	-019	AR
C0105308	31-10-10-01	-005	01
C0105308	31-10-15-01	-009	01
C0105308	31-10-20-01	-012	01
C100-037290	36-13-00-01	-003A	01
C144824-1	27-50-00-01	-235	04
C144824-1	27-50-00-01	-310	04
C166007-0108	35-10-20-01	-102	02
C29326-001	27-20-15-01	-013	02
C3-12-03	21-25-20-01	-021	01
C3-12-05	21-25-20-01	-021A	01
C352CS	26-21-00-01	-003	01
C352CS	26-21-00-01	-008	01
C3H410C2	30-10-00-01	-091	01
C44000-12-E17	29-10-80-01	-005	01
C44000-12-E17	29-10-80-01	-085	01
C44000-16-E17	29-10-80-01	-012	01
C44000-16-E17	29-10-80-01	-078	01
C596501-0103	23-50-20-01	-026	02
C596502-0202	23-50-20-01	-025	02
C6	11-00-00-01	-007	AR
C664503-0101	31-10-50-01	-002	01
C664503-0102	31-10-50-01	-003	01
C664503-0104	31-10-50-01	-001	01
C668512-0101	35-10-20-01	-085	01
CB3019AA3N	52-10-31-01	-014	08
CB3019AA3N750	27-25-00-02	-027	02
CB4019G5N	23-13-00-01	-078	02
CB4019G5N	25-80-03-01	-042	02
CB4019G5N	25-80-03-01	-046	01
CB4019G5N	25-80-03-01	-118	01
CB5000CRA06-6	21-23-25-01	-006	03
CB6009A08-1P	21-25-20-01	-085	02
CB9302V3	27-25-00-02	-021	19
CC	11-00-00-01	-022	AR
CCA36150	34-10-00-02	-012	02
CF	11-00-00-01	-020	AR
CHS440-6	21-25-20-01	-017	02
CJMDX71-001	25-10-01-01	-001	01
CJMDX71-001	25-25-00-01	-008	01
CKRA2506205A	29-20-05-01	-017	01
CL-2-F	25-10-01-01	-010	02
CL1213TSJN	25-50-15-01	-013	02
CL22SPS1	52-10-19-01	-163	01
CL3BLP-B.75	71-10-00-01	-259	01
CL4BLPL1.00	25-50-15-01	-006	01
CL6BLPB1.25	25-50-15-01	-031	02
CL8HRP-S	25-50-15-01	-012	02
CM2662-35RH	27-10-30-01	-384	01
CM2692-15B1S	24-60-10-01	-081	01
CM2692-15B1S	24-60-10-01	-084	01
CM2692-15B1S	24-60-10-01	-086	01
CM2692-15B1S	24-60-10-01	-087	01
CM2692-15B1S	24-60-10-01	-090	01
CM2692-15B1S	24-60-10-01	-092	01
CM2692-15B1S	24-60-10-01	-093	01
CM2692-15B1S	24-60-10-01	-094	01
CM2692-15B1S	24-60-10-01	-095	01
CM2692-15B1S	24-60-10-01	-096	01
CM2692-15B1S	24-60-10-01	-097	01
CM2692-15B1S	24-60-10-01	-098	01
CM2692-15B1S	24-60-10-01	-099	01
CM2692-15B1S	24-60-10-01	-100	01
CM2692-15B1S	24-60-10-01	-104	01
CM2692-15B1S	24-60-10-01	-151	01
CM2692-15B1S	24-60-10-01	-152	01
CM2692-15B1S	24-60-10-01	-154	01
CM2692-15B1S	24-60-10-01	-155	01
CM2692-15B1S	24-60-10-01	-156	01
CM2692-15B1S	24-60-10-01	-157	01
CM2692-15B1S	24-60-10-01	-158	01
CM2692-15B1S	24-60-10-01	-159	01
CM2692-15B1S	24-60-10-01	-169	01
CM2692-15B1S	24-60-10-01	-170	01
CM2692-15B1S	24-60-10-02	-081	01
CM2692-15B1S	24-60-10-02	-090	01
CM2692-15B1S	24-60-10-02	-092	01
CM2692-15B1S	24-60-10-02	-095	01
CM2692-15B1S	24-60-10-02	-096	01
CM2692-15B1S	24-60-10-02	-097	01
CM2692-15B1S	24-60-10-02	-098	01
CM2692-15B1S	24-60-10-02	-099	01
CM2692-15B1S	24-60-10-02	-100	01
CM2692-15B1S	24-60-10-02	-103	01
CM2692-15B1S	24-60-10-02	-110	01
CM2692-15B1S	24-60-10-02	-151	01
CM2692-15B1S	24-60-10-02	-152	01
CM2692-15B1S	24-60-10-02	-154	01
CM2692-15B1S	24-60-10-02	-155	01
CM2692-15B1S	24-60-10-02	-156	01
CM2692-15B1S	24-60-10-02	-157	01
CM2692-15B1S	24-60-10-02	-158	01
CM2692-15B1S	24-60-10-02	-159	01
CM2692-15B1S	24-60-10-02	-161	01
CM2692-15B1S	24-60-15-01	-154	01
CM2692-15B1S	24-60-15-01	-160	01
CM2692-15B1S	24-60-15-01	-162	01
CM2692-15B1S	24-60-15-01	-166	01
CM2692-15B1S	24-60-15-01	-172	01
CM2692-15B1S	24-60-15-01	-175	01
CM2692-15B1S	24-60-15-01	-228	01
CM2692-15B1S	24-60-15-01	-232	01

© Cessna Aircraft Company

PART NUMBER	CH SEC SUBJ FIG	ITEM	REQ
CM2692-15B1S	24-60-15-01	-234	01
CM2692-15B1S	24-60-15-01	-238	01
CM2692-15B1S	24-60-15-01	-242	01
CM2692-15B1S	24-60-15-01	-244	01
CM2692-15B1S	24-60-15-01	-250	01
CM2692-16-1S	57-21-01-01	-034	01
CM2692-16J2S	27-12-00-01	-023	01
CM2692-16Z2S	24-60-05-03	-081	01
CM2692-16Z2S	24-60-05-03	-082	01
CM2692-16Z2S	24-60-05-03	-084	01
CM2692-16Z2S	24-60-05-03	-085	01
CM2692-16Z2S	24-60-05-03	-086	01
CM2692-16Z2S	24-60-05-03	-103	01
CM2692-16Z2S	24-60-05-03	-104	01
CM2692-16Z2S	24-60-05-03	-107	01
CM2692-16Z2S	24-60-05-04	-028	01
CM2692-16Z2S	24-60-05-04	-030	01
CM2692-16Z2S	24-60-05-04	-080	01
CM2692-16Z2S	24-60-05-04	-081	01
CM2692-16Z2S	24-60-05-04	-083	01
CM2692-16Z2S	24-60-05-04	-107	01
CM2692-16Z2S	24-60-05-04	-108	01
CM2692-24-1H	53-10-01-01	-004	NP
CM2692-24-1S	55-40-00-01	-083	01
CM2692-24J1S	32-70-00-01	-014	28
CM2692-24J1S	53-10-01-01	-004A	02
CM2790-4	21-50-10-01	-027	04
CM2791-1	21-50-10-01	-029	04
CM2791-1	52-40-23-01	-005	02
CM2791-1	53-30-02-03	-083	31
CM2791-1	53-30-02-03	-089	08
CM2791-1	53-30-02-03	-153	18
CM2791-1	53-30-02-03	-158	16
CM2791-1	53-30-02-03	-164	07
CM2791-1	53-30-03-05	-007	22
CM2879-1	52-30-40-01	-007	03
CM2879-1	52-30-40-01	-008	03
CM2916-400	24-30-30-01	-080	01
CM2916-400	24-30-30-01	-081	01
CM2919-2-.25	24-60-00-01	-042	AR
CM2919-4-.25A	56-13-00-01	-014	AR
CM2939-4-10	52-11-20-01	-015	01
CM2944-4-11.00	34-10-00-01	-011	02
CM2944-4-12.75	27-40-00-01	-092	01
CM2944-4-13.00	36-15-00-02	-108	01
CM2944-4-16.00	34-10-00-01	-022	01
CM2944-4-24.00	21-35-00-01	-085	01
CM2944-4-7.25	27-40-00-01	-088	01
CM2944-6-8.50	34-10-00-02	-003	01
CM2944-6-9.75	34-10-00-02	-002	01
CM3211-8A3.0	21-26-00-01	-010	AR
CM3213-14-3.50	21-23-20-01	-003	04
CM3524-4-12	32-33-00-01	-082	01
CM3524-4-12	32-49-00-01	-016	01
CM3524-4-12	52-10-11-01	-268	01
CM3524-8-20	32-70-00-01	-019	01
CM3524A5-12	52-40-47-01	-014	01
CM3558-4-10B	31-10-50-01	-004	02
CM3558-6-8B	27-50-00-02	-002	02
CM3570-20	21-25-00-02	-030	02
CM3575-5	53-10-05-01	-001	12
CM3578-1	35-10-20-01	-010	01
CM3578-2	35-10-20-01	-011	01
CM3578-3	35-10-20-01	-012	01
CM3612-12A4.0	21-25-75-01	-003	03
CM3640-1	30-40-00-01	-024	01
CM3663-4	21-25-20-01	-093	AR
CM3686D04-04-04	36-15-00-02	-100	01
CM3686D04-06-04	36-15-00-02	-025	01
CM3686D06-06-06	36-15-00-03	-011	02
CM3687D04-04-04	52-11-00-01	-017	01
CM3738-8	21-35-00-01	-029	02
CM3863-3	27-10-30-01	-075	02
CM3863-3	27-10-30-01	-083	02
CM3863-3	27-10-30-01	-150	04
CM3863-3	27-20-05-01	-169	04
CM3863-3	27-20-05-01	-225	04
CM3863-4	27-30-05-01	-076	02
CM3870-4-27-9	27-10-50-01	-170	02
CM3870-5-31-8	27-10-50-01	-192	01
CM3870-5-31-9	27-10-50-01	-080	01
CM3870-5-31-9	27-10-50-01	-101	01
CN	11-00-00-01	-081	AR
CR	11-00-00-01	-094	AR
CR2	25-25-00-01	-001	01
CS	11-00-00-01	-095	AR
CTJ-3D-07	24-60-10-01	-239	01
CTJ-3D-07	24-60-10-02	-239	01
CU	11-00-00-01	-027	AR
CX1A0960-0640AA	71-10-00-01	-257	04
D	11-00-00-01	-036	AR
D20003D2416	28-21-00-02	-196	02
DDA06546-1	34-10-00-02	-075A	01
DDA06575-01	27-11-00-01	-100A	01
DDA06593-1	32-43-00-01	-002A	04
DDA06616-2	52-10-22-02	-243A	01
DDA06619-2	27-20-05-01	-161A	01
DDA06626-1	27-13-05-01	-085A	02
DDA06639-1	27-20-05-01	-001A	01
DDA06694-1	27-20-05-01	-075A	01
DDA06694-2	27-20-05-01	-094A	01
DDA06694-3	27-20-05-01	-100A	01
DDA06702-1	27-20-05-01	-001B	01
DDA06751-1	57-60-00-02	-016A	01
DDA06751-2	57-60-00-02	-017A	01
DGSC20-02	34-31-00-01	-006	01
DQ	11-00-00-01	-033	AR
DSSB50P	56-15-00-01	-021	01
EC	11-00-00-01	-106	AR
EI	11-00-00-01	-045	AR
EJ	11-00-00-01	-046	AR
ES	11-00-00-01	-032	AR
ETM107-375-3000A	27-33-00-01	-177	NP
F	11-00-00-01	-035	AR
F780109	25-80-02-01	-002	AR
F840013	21-23-00-01	-100	AR
F840013	30-10-00-02	-025	AR
F840013	30-10-00-02	-080	AR
F840013	30-13-00-01	-016	AR
F840013	30-20-00-01	-018	AR
F840013	30-20-00-02	-031	AR
F840013	36-10-20-02	-012	AR
F840021	21-23-00-01	-099	AR
F840021	30-10-00-01	-026	AR

© Cessna Aircraft Company

PART NUMBER	CH SEC SUBJ FIG	ITEM	REQ	PART NUMBER	CH SEC SUBJ FIG	ITEM	REQ
F840021	30-10-00-02	-024	AR	HK	11-00-00-01	-024	AR
F840021	30-10-00-02	-079	AR	HK424-8J	36-15-00-03	-082	02
F840021	30-10-30-01	-016	AR	HL10VAZ-8-12	57-10-02-01	-579	02
F840021	30-13-00-01	-015	AR	HL10VAZ-8-13	57-10-02-01	-580	02
F840021	30-13-10-01	-086	AR	HL10VAZ-8-18	57-10-02-01	-581	02
F840021	30-20-00-01	-017	AR	HL10VAZ-8-18	57-80-00-01	-032	02
F840021	30-20-00-02	-032	AR	HL10VBJ10-19	57-80-00-01	-152	02
F840021	36-10-20-02	-013	AR	HL10VBJ10-23	57-80-00-01	-153	02
F840021	36-15-00-03	-100	AR	HL10VBJ10-7	28-11-55-01	-008	04
F840021	49-80-00-01	-011	AR	HL10VBJ12-14	53-45-00-01	-005	02
F840048	25-50-00-01	-180	AR	HL10VBJ12-16	53-45-00-01	-006	02
F990118	25-80-01-04	-016	AR	HL10VBJ4-2	53-12-00-02	-082	02
F990118	25-80-01-04	-091	AR	HL10VBJ4-2	53-12-00-02	-087	01
F990210	21-23-20-01	-020	AR	HL10VBJ4-2	53-20-00-08	-035	04
F990328	21-23-20-01	-020A	AR	HL10VBJ4-2	53-22-00-07	-010	02
FMI-323-45010-B	32-10-00-01	-108	02	HL10VBJ4-2	53-22-00-07	-081	02
G	11-00-00-01	-113	AR	HL10VBJ4-2	53-22-00-07	-157	02
G441858	21-23-00-01	-098	AR	HL10VBJ4-2	53-22-00-08	-007	02
G441858	30-10-00-02	-027	AR	HL10VBJ4-2	53-60-00-07	-004	03
G441858	30-10-00-02	-082	AR	HL10VBJ4-2	53-60-00-07	-081	03
G441858	30-10-30-01	-017	AR	HL10VBJ4-2	53-60-00-07	-167	03
G441858	30-13-00-01	-018	AR	HL10VBJ4-2	53-60-00-07	-239	03
G441858	30-20-00-01	-020	AR	HL10VBJ4-2	53-60-01-01	-026	02
G441858	30-20-00-02	-033	AR	HL10VBJ4-2	53-60-01-01	-030	06
G441858	36-10-20-02	-011	AR	HL10VBJ4-2	53-60-01-01	-097	02
G441858	49-80-00-01	-010	AR	HL10VBJ4-2	53-60-01-02	-016	02
G441863	21-23-00-01	-097	AR	HL10VBJ4-2	53-60-01-02	-020	02
G441863	30-10-00-01	-027	AR	HL10VBJ4-2	53-60-01-02	-083	02
G441863	30-10-00-02	-026	AR	HL10VBJ4-2	53-60-01-03	-021	02
G441863	30-10-00-02	-081	AR	HL10VBJ4-2	53-60-01-03	-025	05
G441863	30-13-00-01	-017	AR	HL10VBJ4-2	53-60-01-03	-097	02
G441863	30-13-10-01	-087	AR	HL10VBJ4-2	53-60-01-04	-016	AR
G441863	30-20-00-01	-019	AR	HL10VBJ4-2	53-60-01-04	-020	05
G441863	30-20-00-02	-034	AR	HL10VBJ4-2	53-60-01-04	-026	AR
G441863	36-15-00-03	-099	AR	HL10VBJ4-2	53-60-01-04	-029	05
G881895	25-80-02-01	-002A	AR	HL10VBJ4-2	53-60-01-04	-033	AR
GH5	25-50-00-01	-077	02	HL10VBJ4-2	53-60-01-04	-081	02
GH6	25-50-00-01	-016	02	HL10VBJ4-2	53-60-01-05	-026	02
GR-09-043-2	30-10-20-01	-076	01	HL10VBJ4-2	53-60-01-05	-034	02
H2301-7	71-10-00-01	-173	04	HL10VBJ4-2	53-60-01-05	-078	02
H3482A096C064C	71-10-00-01	-258	04	HL10VBJ4-2	53-60-01-05	-081	02
H355	38-30-10-01	-002	01	HL10VBJ4-2	53-60-01-06	-002	02
H5000-2-064-179	52-40-15-01	-002	03	HL10VBJ4-2	53-60-01-06	-005	02
H5000-2-064-179	52-40-33-01	-002	02	HL10VBJ4-2	53-60-01-06	-076	02
H5000-2-064-179	52-40-33-01	-009	01	HL10VBJ4-2	53-60-01-06	-082	02
H5000-2-064-179	52-40-47-01	-006	10	HL10VBJ4-2	53-60-01-06	-092	02
H5000-2-064-179	52-40-47-01	-013	03	HL10VBJ4-2	53-60-01-06	-095	02
H5000-2-064-179	52-40-47-01	-021	01	HL10VBJ4-2	53-60-01-07	-010	02
H5000-2-091-196	52-40-07-01	-006	02	HL10VBJ4-2	53-60-01-07	-031	AR
H517A	27-24-10-01	-001	01	HL10VBJ4-2	53-60-01-07	-042	04
H517A	27-24-10-01	-002	01	HL10VBJ4-2	53-60-01-09	-013	02
H517A	27-24-15-01	-002	01	HL10VBJ4-2	53-60-01-09	-037	02
H517A	27-24-15-01	-003	01	HL10VBJ4-2	53-60-01-09	-097	02
HA	11-00-00-01	-041	AR	HL10VBJ4-2	53-60-01-09	-121	02
HB	11-00-00-01	-056	AR	HL10VBJ4-2	53-60-01-10	-009	02
HB	11-00-00-01	-108	AR	HL10VBJ4-2	53-60-01-10	-083	02
HC002-08	38-32-05-01	-010	01	HL10VBJ4-2	53-60-01-11	-017	02
HC002-08	38-32-10-01	-019	01	HL10VBJ4-2	53-60-01-11	-026	02
HG101	38-30-15-01	-022	01	HL10VBJ4-2	53-60-01-11	-083	02
HG2100BB02	34-20-00-01	-008	01	HL10VBJ4-2	53-60-03-01	-029	50
HG2100BB02	34-20-00-01	-009	01	HL10VBJ4-2	53-60-05-02	-012	02
HI	11-00-00-01	-030	AR	HL10VBJ4-2	55-20-00-03	-009	08

© Cessna Aircraft Company

PART NUMBER	CH SEC SUBJ FIG	ITEM	REQ	PART NUMBER	CH SEC SUBJ FIG	ITEM	REQ
HL10VBJ4-3	22-10-10-01	-019	03	HL10VBJ4-4	52-30-00-01	-012	03
HL10VBJ4-3	27-10-15-01	-236	08	HL10VBJ4-4	53-12-00-02	-084	01
HL10VBJ4-3	27-13-00-01	-021	04	HL10VBJ4-4	53-12-00-02	-089	01
HL10VBJ4-3	27-13-00-01	-078	04	HL10VBJ4-4	53-20-00-01	-081	04
HL10VBJ4-3	27-30-05-01	-248	02	HL10VBJ4-4	53-20-00-01	-184	08
HL10VBJ4-3	27-31-00-01	-017	06	HL10VBJ4-4	53-20-00-03	-020	02
HL10VBJ4-3	32-31-05-01	-004	06	HL10VBJ4-4	53-20-00-04	-005	04
HL10VBJ4-3	32-31-05-01	-040	18	HL10VBJ4-4	53-20-00-04	-048	01
HL10VBJ4-3	52-10-03-01	-021	01	HL10VBJ4-4	53-20-00-04	-079	01
HL10VBJ4-3	52-30-00-01	-011	02	HL10VBJ4-4	53-20-00-05	-005	04
HL10VBJ4-3	53-12-00-01	-007	04	HL10VBJ4-4	53-20-00-06	-086	01
HL10VBJ4-3	53-12-00-02	-020	03	HL10VBJ4-4	53-20-00-06	-091	01
HL10VBJ4-3	53-12-00-02	-083	02	HL10VBJ4-4	53-20-00-07	-005	04
HL10VBJ4-3	53-12-00-02	-088	02	HL10VBJ4-4	53-22-00-05	-159	76
HL10VBJ4-3	53-22-00-02	-037	02	HL10VBJ4-4	53-22-00-05	-166	04
HL10VBJ4-3	53-22-00-05	-155	56	HL10VBJ4-4	53-22-00-06	-016	AR
HL10VBJ4-3	53-22-00-05	-165	28	HL10VBJ4-4	53-22-00-09	-027	03
HL10VBJ4-3	53-22-00-06	-015	AR	HL10VBJ4-4	53-22-00-09	-151	16
HL10VBJ4-3	53-22-00-08	-082	02	HL10VBJ4-4	53-22-00-09	-160	06
HL10VBJ4-3	53-22-00-09	-026	02	HL10VBJ4-4	53-22-00-09	-165	04
HL10VBJ4-3	53-22-00-09	-159	04	HL10VBJ4-4	53-22-00-09	-171	04
HL10VBJ4-3	53-22-00-10	-079	02	HL10VBJ4-4	53-22-00-10	-080	04
HL10VBJ4-3	53-22-00-10	-091	02	HL10VBJ4-4	53-22-00-10	-092	03
HL10VBJ4-3	53-22-00-10	-107	02	HL10VBJ4-4	53-22-00-10	-108	03
HL10VBJ4-3	53-22-00-10	-116	02	HL10VBJ4-4	53-22-00-10	-117	03
HL10VBJ4-3	53-24-00-01	-081	04	HL10VBJ4-4	53-24-00-01	-248	02
HL10VBJ4-3	53-24-00-01	-151	04	HL10VBJ4-4	53-24-00-01	-278	03
HL10VBJ4-3	53-30-06-02	-092	AR	HL10VBJ4-4	53-24-00-01	-304	AR
HL10VBJ4-3	53-60-00-07	-005	02	HL10VBJ4-4	53-60-00-07	-094	03
HL10VBJ4-3	53-60-00-07	-082	02	HL10VBJ4-4	53-60-00-07	-155	02
HL10VBJ4-3	53-60-00-07	-154	03	HL10VBJ4-4	53-60-00-07	-168	02
HL10VBJ4-3	53-60-00-07	-229	03	HL10VBJ4-4	53-60-00-07	-230	02
HL10VBJ4-3	53-60-00-07	-249	03	HL10VBJ4-4	53-60-00-07	-240	02
HL10VBJ4-3	53-60-00-07	-305	03	HL10VBJ4-4	53-60-00-07	-250	02
HL10VBJ4-3	53-60-00-07	-322	03	HL10VBJ4-4	53-60-00-07	-306	02
HL10VBJ4-3	53-60-00-07	-380	03	HL10VBJ4-4	53-60-00-07	-381	02
HL10VBJ4-3	53-60-00-07	-393	03	HL10VBJ4-4	53-60-00-07	-394	02
HL10VBJ4-3	53-60-01-01	-012	02	HL10VBJ4-4	53-60-01-06	-089	01
HL10VBJ4-3	53-60-01-02	-012	02	HL10VBJ4-4	53-60-01-11	-003	02
HL10VBJ4-3	53-60-01-03	-012	02	HL10VBJ4-4	53-60-01-11	-041	02
HL10VBJ4-3	53-60-01-05	-084	02	HL10VBJ4-4	53-60-01-11	-077	02
HL10VBJ4-3	53-60-01-07	-011	02	HL10VBJ4-4	53-60-04-01	-003	10
HL10VBJ4-3	53-60-01-09	-043	02	HL10VBJ4-4	53-60-04-01	-010	05
HL10VBJ4-3	53-60-01-11	-087	10	HL10VBJ4-4	55-10-00-02	-025	04
HL10VBJ4-3	53-60-03-01	-035	02	HL10VBJ4-4	55-10-00-02	-026	03
HL10VBJ4-3	53-60-03-02	-023	07	HL10VBJ4-4	55-10-00-02	-031	06
HL10VBJ4-3	53-60-04-01	-009	04	HL10VBJ4-4	57-20-00-05	-040	06
HL10VBJ4-3	53-60-05-02	-011	01	HL10VBJ4-4	57-20-00-08	-005	13
HL10VBJ4-3	53-60-05-02	-078	04	HL10VBJ4-4	57-20-00-08	-319	08
HL10VBJ4-3	55-10-00-02	-023	05	HL10VBJ4-4	57-20-00-08	-322	02
HL10VBJ4-3	57-20-00-05	-038	76	HL10VBJ4-5	27-31-00-01	-027	05
HL10VBJ4-3	57-21-01-01	-032	04	HL10VBJ4-5	52-10-00-01	-027	04
HL10VBJ4-4	27-00-02-01	-030	01	HL10VBJ4-5	52-30-00-01	-013	01
HL10VBJ4-4	27-10-15-01	-109	02	HL10VBJ4-5	53-12-00-01	-006	02
HL10VBJ4-4	27-10-15-01	-123	08	HL10VBJ4-5	53-12-00-02	-021	02
HL10VBJ4-4	27-10-15-01	-251	04	HL10VBJ4-5	53-12-15-01	-024	04
HL10VBJ4-4	27-10-50-02	-185	05	HL10VBJ4-5	53-22-00-09	-014	06
HL10VBJ4-4	27-10-50-02	-190	04	HL10VBJ4-5	53-22-00-09	-172	06
HL10VBJ4-4	27-10-50-02	-193	02	HL10VBJ4-5	53-24-00-01	-082	08
HL10VBJ4-4	27-13-00-01	-030	03	HL10VBJ4-5	53-24-00-01	-152	08
HL10VBJ4-4	27-25-00-01	-097	03	HL10VBJ4-5	53-24-00-01	-239	02
HL10VBJ4-4	27-31-00-01	-018	03	HL10VBJ4-5	53-24-00-01	-314	AR

© Cessna Aircraft Company

PART NUMBER	CH SEC SUBJ FIG	ITEM	REQ	PART NUMBER	CH SEC SUBJ FIG	ITEM	REQ
HL10VBJ4-5	53-30-06-01	-169	AR	HL10VBJ5-2	53-30-06-04	-007	01
HL10VBJ4-5	53-30-06-02	-110	AR	HL10VBJ5-2	53-30-06-04	-011	04
HL10VBJ4-5	53-60-00-07	-095	02	HL10VBJ5-2	53-30-06-04	-016	01
HL10VBJ4-5	53-60-00-07	-323	03	HL10VBJ5-2	53-30-06-04	-093	04
HL10VBJ4-5	53-60-03-02	-022	02	HL10VBJ5-2	53-30-06-04	-187	04
HL10VBJ4-6	53-12-00-01	-005	04	HL10VBJ5-2	53-30-06-04	-235	01
HL10VBJ4-6	53-12-00-02	-022	01	HL10VBJ5-2	53-30-06-04	-252	04
HL10VBJ4-6	53-22-00-05	-087	30	HL10VBJ5-2	53-30-06-04	-257	03
HL10VBJ4-6	53-22-00-09	-152	40	HL10VBJ5-2	53-60-01-01	-007	03
HL10VBJ4-6	53-22-00-09	-166	06	HL10VBJ5-2	53-60-01-02	-007	03
HL10VBJ4-6	53-24-00-01	-080	01	HL10VBJ5-2	53-60-01-03	-008	03
HL10VBJ4-6	53-24-00-01	-169	01	HL10VBJ5-2	53-60-01-04	-011	03
HL10VBJ4-7	53-22-00-05	-015	08	HL10VBJ5-2	53-60-01-06	-099	06
HL10VBJ4-7	53-22-00-05	-157	04	HL10VBJ5-2	53-60-03-02	-017	02
HL10VBJ4-7	53-22-00-06	-003	AR	HL10VBJ5-2	53-60-05-02	-009	04
HL10VBJ4-7	53-22-00-06	-017	AR	HL10VBJ5-2	55-10-00-02	-008	22
HL10VBJ4-7	55-10-00-01	-256	01	HL10VBJ5-2	57-10-00-01	-011	04
HL10VBJ4-7	55-10-00-02	-024	01	HL10VBJ5-2	57-10-00-01	-015	02
HL10VBJ4-8	55-10-00-02	-030	02	HL10VBJ5-2	57-20-01-05	-010	02
HL10VBJ5-10	53-22-00-05	-088	15	HL10VBJ5-2	57-20-01-05	-014	02
HL10VBJ5-10	53-22-00-06	-004A	15	HL10VBJ5-2	57-20-01-12	-085	04
HL10VBJ5-10	55-30-00-04	-235	07	HL10VBJ5-2	57-20-01-12	-090	02
HL10VBJ5-10	57-10-02-03	-026	02	HL10VBJ5-2	57-20-01-12	-094	02
HL10VBJ5-10	57-10-02-03	-035	02	HL10VBJ5-2	57-20-01-13	-031	03
HL10VBJ5-10	57-10-02-03	-044	02	HL10VBJ5-2	57-20-01-15	-035	02
HL10VBJ5-10	57-10-02-05	-152	02	HL10VBJ5-2	57-20-01-17	-016	02
HL10VBJ5-11	53-22-00-09	-008	AR	HL10VBJ5-3	27-10-30-01	-528	02
HL10VBJ5-11	53-22-00-10	-008	AR	HL10VBJ5-3	27-10-50-02	-003	04
HL10VBJ5-11	55-10-00-01	-164	07	HL10VBJ5-3	27-10-50-02	-007	03
HL10VBJ5-11	57-10-02-05	-173	05	HL10VBJ5-3	27-10-50-02	-013	05
HL10VBJ5-14	55-10-00-01	-165	02	HL10VBJ5-3	27-10-50-02	-022	04
HL10VBJ5-14	57-51-00-01	-185	04	HL10VBJ5-3	53-20-00-06	-100	01
HL10VBJ5-15	57-80-00-01	-086	06	HL10VBJ5-3	53-20-00-06	-105	01
HL10VBJ5-18	55-10-00-01	-166	02	HL10VBJ5-3	53-20-00-06	-123	02
HL10VBJ5-19	55-20-00-01	-035	04	HL10VBJ5-3	53-20-00-08	-020	04
HL10VBJ5-2	22-10-10-01	-010	04	HL10VBJ5-3	53-20-03-04	-005	04
HL10VBJ5-2	22-10-10-02	-008	02	HL10VBJ5-3	53-21-00-01	-041	AR
HL10VBJ5-2	22-10-10-02	-012	04	HL10VBJ5-3	53-21-00-01	-123	AR
HL10VBJ5-2	27-10-15-01	-107	02	HL10VBJ5-3	53-21-00-01	-155	AR
HL10VBJ5-2	27-25-00-01	-019	02	HL10VBJ5-3	53-21-00-02	-004	AR
HL10VBJ5-2	53-20-00-06	-104	02	HL10VBJ5-3	53-21-00-02	-083	AR
HL10VBJ5-2	53-20-03-04	-004	04	HL10VBJ5-3	53-30-06-01	-007	AR
HL10VBJ5-2	53-21-00-01	-005	AR	HL10VBJ5-3	53-30-06-01	-018	AR
HL10VBJ5-2	53-21-00-01	-040	AR	HL10VBJ5-3	53-30-06-01	-025	AR
HL10VBJ5-2	53-21-00-01	-090	AR	HL10VBJ5-3	53-30-06-01	-039	AR
HL10VBJ5-2	53-21-00-01	-122	AR	HL10VBJ5-3	53-30-06-01	-082	AR
HL10VBJ5-2	53-21-00-01	-154	AR	HL10VBJ5-3	53-30-06-01	-088	AR
HL10VBJ5-2	53-21-00-02	-003	AR	HL10VBJ5-3	53-30-06-01	-092	AR
HL10VBJ5-2	53-21-00-02	-012	AR	HL10VBJ5-3	53-30-06-01	-101	AR
HL10VBJ5-2	53-21-00-02	-017	AR	HL10VBJ5-3	53-30-06-01	-156	AR
HL10VBJ5-2	53-21-00-02	-023	AR	HL10VBJ5-3	53-30-06-01	-177	AR
HL10VBJ5-2	53-21-00-02	-077	AR	HL10VBJ5-3	53-30-06-02	-015	AR
HL10VBJ5-2	53-21-00-02	-084	AR	HL10VBJ5-3	53-30-06-02	-028	AR
HL10VBJ5-2	53-21-00-02	-088	AR	HL10VBJ5-3	53-30-06-02	-038	AR
HL10VBJ5-2	53-22-00-09	-154	08	HL10VBJ5-3	53-30-06-02	-078	AR
HL10VBJ5-2	53-30-06-03	-008	01	HL10VBJ5-3	53-30-06-02	-090	AR
HL10VBJ5-2	53-30-06-03	-020	04	HL10VBJ5-3	53-30-06-02	-108	AR
HL10VBJ5-2	53-30-06-03	-089	04	HL10VBJ5-3	53-30-06-03	-009	01
HL10VBJ5-2	53-30-06-03	-159	04	HL10VBJ5-3	53-30-06-03	-021	03
HL10VBJ5-2	53-30-06-03	-239	01	HL10VBJ5-3	53-30-06-03	-028	01
HL10VBJ5-2	53-30-06-03	-257	01	HL10VBJ5-3	53-30-06-03	-033	03
HL10VBJ5-2	53-30-06-03	-264	04	HL10VBJ5-3	53-30-06-03	-045	01

© Cessna Aircraft Company

PART NUMBER	CH SEC SUBJ FIG	ITEM	REQ
HL10VBJ5-3	53-30-06-03	-080	02
HL10VBJ5-3	53-30-06-03	-090	03
HL10VBJ5-3	53-30-06-03	-099	01
HL10VBJ5-3	53-30-06-03	-154	04
HL10VBJ5-3	53-30-06-03	-160	03
HL10VBJ5-3	53-30-06-03	-168	01
HL10VBJ5-3	53-30-06-03	-231	01
HL10VBJ5-3	53-30-06-03	-235	01
HL10VBJ5-3	53-30-06-03	-246	01
HL10VBJ5-3	53-30-06-03	-250	03
HL10VBJ5-3	53-30-06-03	-258	02
HL10VBJ5-3	53-30-06-03	-265	03
HL10VBJ5-3	53-30-06-04	-012	03
HL10VBJ5-3	53-30-06-04	-027	01
HL10VBJ5-3	53-30-06-04	-088	01
HL10VBJ5-3	53-30-06-04	-094	03
HL10VBJ5-3	53-30-06-04	-157	01
HL10VBJ5-3	53-30-06-04	-162	12
HL10VBJ5-3	53-30-06-04	-166	11
HL10VBJ5-3	53-30-06-04	-173	04
HL10VBJ5-3	53-30-06-04	-182	01
HL10VBJ5-3	53-30-06-04	-188	03
HL10VBJ5-3	53-30-06-04	-231	01
HL10VBJ5-3	53-30-06-04	-236	01
HL10VBJ5-3	53-30-06-04	-247	01
HL10VBJ5-3	53-30-06-04	-258	06
HL10VBJ5-3	53-40-00-02	-035	08
HL10VBJ5-3	53-42-03-01	-028	01
HL10VBJ5-3	53-42-03-01	-088	02
HL10VBJ5-3	53-42-03-01	-102	01
HL10VBJ5-3	53-43-00-01	-006	02
HL10VBJ5-3	53-60-01-05	-087	03
HL10VBJ5-3	53-60-01-05	-096	03
HL10VBJ5-3	53-60-01-07	-040	AR
HL10VBJ5-3	53-60-01-07	-079	AR
HL10VBJ5-3	53-60-01-07	-102	AR
HL10VBJ5-3	53-60-01-08	-153	08
HL10VBJ5-3	53-60-01-08	-158	14
HL10VBJ5-3	53-60-01-08	-163	02
HL10VBJ5-3	53-60-01-08	-228	02
HL10VBJ5-3	53-60-01-08	-234	02
HL10VBJ5-3	53-60-01-08	-316	14
HL10VBJ5-3	53-60-01-10	-015	04
HL10VBJ5-3	53-60-01-10	-020	26
HL10VBJ5-3	53-60-01-10	-029	04
HL10VBJ5-3	53-60-01-10	-036	05
HL10VBJ5-3	53-60-01-10	-048	10
HL10VBJ5-3	53-60-01-10	-089	04
HL10VBJ5-3	53-60-01-10	-094	28
HL10VBJ5-3	53-60-01-10	-106	04
HL10VBJ5-3	53-60-01-10	-114	05
HL10VBJ5-3	53-60-01-10	-122	08
HL10VBJ5-3	53-60-01-11	-005	02
HL10VBJ5-3	53-60-01-11	-089	06
HL10VBJ5-3	53-60-02-01	-012	AR
HL10VBJ5-3	53-60-03-01	-037	06
HL10VBJ5-3	53-60-03-02	-018	03
HL10VBJ5-3	53-60-03-02	-042	06
HL10VBJ5-3	53-60-05-02	-093	04
HL10VBJ5-3	53-60-05-02	-099	03
HL10VBJ5-3	55-30-00-02	-002	08
HL10VBJ5-3	55-30-00-04	-108	04
HL10VBJ5-3	55-30-00-06	-006	AR
HL10VBJ5-3	55-30-00-07	-005	04
HL10VBJ5-3	55-30-00-08	-102	22
HL10VBJ5-3	57-10-02-04	-005	22
HL10VBJ5-3	57-10-02-04	-016	14
HL10VBJ5-3	57-10-02-04	-019	05
HL10VBJ5-3	57-10-02-04	-025	12
HL10VBJ5-3	57-10-02-04	-036	10
HL10VBJ5-3	57-10-02-04	-081	11
HL10VBJ5-3	57-10-02-04	-092	09
HL10VBJ5-3	57-10-02-05	-027	AR
HL10VBJ5-3	57-10-02-05	-040	AR
HL10VBJ5-3	57-10-02-05	-089	AR
HL10VBJ5-3	57-20-00-04	-108	70
HL10VBJ5-3	57-20-00-05	-036	26
HL10VBJ5-3	57-20-00-07	-092	32
HL10VBJ5-3	57-20-00-08	-003	08
HL10VBJ5-3	57-20-00-08	-027	01
HL10VBJ5-3	57-20-00-08	-092	02
HL10VBJ5-3	57-20-01-01	-010	04
HL10VBJ5-3	57-20-01-01	-015	04
HL10VBJ5-3	57-20-01-01	-020	04
HL10VBJ5-3	57-20-01-01	-025	04
HL10VBJ5-3	57-20-01-01	-030	04
HL10VBJ5-3	57-20-01-01	-084	04
HL10VBJ5-3	57-20-01-01	-089	04
HL10VBJ5-3	57-20-01-01	-094	04
HL10VBJ5-3	57-20-01-01	-099	04
HL10VBJ5-3	57-20-01-01	-104	04
HL10VBJ5-3	57-20-01-01	-109	04
HL10VBJ5-3	57-20-01-02	-012	14
HL10VBJ5-3	57-20-01-02	-017	02
HL10VBJ5-3	57-20-01-02	-023	04
HL10VBJ5-3	57-20-01-02	-029	04
HL10VBJ5-3	57-20-01-05	-009	10
HL10VBJ5-3	57-20-01-05	-013	16
HL10VBJ5-3	57-20-01-05	-018	08
HL10VBJ5-3	57-20-01-06	-011	02
HL10VBJ5-3	57-20-01-06	-019	12
HL10VBJ5-3	57-20-01-06	-086	06
HL10VBJ5-3	57-20-01-06	-095	02
HL10VBJ5-3	57-20-01-07	-006	02
HL10VBJ5-3	57-20-01-07	-014	10
HL10VBJ5-3	57-20-01-07	-086	06
HL10VBJ5-3	57-20-01-07	-094	02
HL10VBJ5-3	57-20-01-08	-007	02
HL10VBJ5-3	57-20-01-08	-014	12
HL10VBJ5-3	57-20-01-08	-085	06
HL10VBJ5-3	57-20-01-08	-093	02
HL10VBJ5-3	57-20-01-09	-008	12
HL10VBJ5-3	57-20-01-09	-015	02
HL10VBJ5-3	57-20-01-09	-087	04
HL10VBJ5-3	57-20-01-09	-095	02
HL10VBJ5-3	57-20-01-10	-017	06
HL10VBJ5-3	57-20-01-10	-023	08
HL10VBJ5-3	57-20-01-10	-084	06
HL10VBJ5-3	57-20-01-10	-090	04
HL10VBJ5-3	57-20-01-11	-017	06
HL10VBJ5-3	57-20-01-11	-085	02
HL10VBJ5-3	57-20-01-11	-093	04
HL10VBJ5-3	57-20-01-12	-011	12
HL10VBJ5-3	57-20-01-12	-014	16

© Cessna Aircraft Company

PART NUMBER	CH SEC SUBJ FIG	ITEM	REQ	PART NUMBER	CH SEC SUBJ FIG	ITEM	REQ
HL10VBJ5-3	57-20-01-12	-086	04	HL10VBJ5-4	53-30-06-03	-046	02
HL10VBJ5-3	57-20-01-12	-091	02	HL10VBJ5-4	53-30-06-03	-077	02
HL10VBJ5-3	57-20-01-12	-095	02	HL10VBJ5-4	53-30-06-03	-081	02
HL10VBJ5-3	57-20-01-13	-020	02	HL10VBJ5-4	53-30-06-03	-085	03
HL10VBJ5-3	57-20-01-13	-025	08	HL10VBJ5-4	53-30-06-03	-094	02
HL10VBJ5-3	57-20-01-13	-032	03	HL10VBJ5-4	53-30-06-03	-100	04
HL10VBJ5-3	57-20-01-13	-083	06	HL10VBJ5-4	53-30-06-03	-104	03
HL10VBJ5-3	57-20-01-13	-088	04	HL10VBJ5-4	53-30-06-03	-155	04
HL10VBJ5-3	57-20-01-14	-085	02	HL10VBJ5-4	53-30-06-03	-165	06
HL10VBJ5-3	57-20-01-14	-091	04	HL10VBJ5-4	53-30-06-03	-169	03
HL10VBJ5-3	57-20-01-15	-013	02	HL10VBJ5-4	53-30-06-03	-228	02
HL10VBJ5-3	57-20-01-15	-036	02	HL10VBJ5-4	53-30-06-03	-232	02
HL10VBJ5-3	57-20-01-16	-009	04	HL10VBJ5-4	53-30-06-03	-236	04
HL10VBJ5-3	57-20-01-16	-013	04	HL10VBJ5-4	53-30-06-03	-240	04
HL10VBJ5-3	57-20-01-16	-017	02	HL10VBJ5-4	53-30-06-03	-243	03
HL10VBJ5-3	57-20-01-17	-009	02	HL10VBJ5-4	53-30-06-03	-247	02
HL10VBJ5-3	57-20-01-17	-027	02	HL10VBJ5-4	53-30-06-03	-253	01
HL10VBJ5-3	57-20-01-17	-036	02	HL10VBJ5-4	53-30-06-04	-008	01
HL10VBJ5-3	57-20-01-18	-017	02	HL10VBJ5-4	53-30-06-04	-017	02
HL10VBJ5-3	57-20-01-18	-033	02	HL10VBJ5-4	53-30-06-04	-024	06
HL10VBJ5-3	57-21-01-01	-026	01	HL10VBJ5-4	53-30-06-04	-028	02
HL10VBJ5-4	27-10-15-01	-125	06	HL10VBJ5-4	53-30-06-04	-033	02
HL10VBJ5-4	27-10-50-02	-002	06	HL10VBJ5-4	53-30-06-04	-079	06
HL10VBJ5-4	27-10-50-02	-021	04	HL10VBJ5-4	53-30-06-04	-083	04
HL10VBJ5-4	27-10-50-02	-097	03	HL10VBJ5-4	53-30-06-04	-089	03
HL10VBJ5-4	27-10-50-02	-151	14	HL10VBJ5-4	53-30-06-04	-152	06
HL10VBJ5-4	27-10-50-02	-181	06	HL10VBJ5-4	53-30-06-04	-158	03
HL10VBJ5-4	52-10-00-01	-026	24	HL10VBJ5-4	53-30-06-04	-174	04
HL10VBJ5-4	52-30-00-01	-015	04	HL10VBJ5-4	53-30-06-04	-179	06
HL10VBJ5-4	53-12-00-02	-017	03	HL10VBJ5-4	53-30-06-04	-183	03
HL10VBJ5-4	53-12-15-01	-026	24	HL10VBJ5-4	53-30-06-04	-228	05
HL10VBJ5-4	53-20-00-06	-101	03	HL10VBJ5-4	53-30-06-04	-232	03
HL10VBJ5-4	53-20-00-06	-106	01	HL10VBJ5-4	53-30-06-04	-237	02
HL10VBJ5-4	53-20-00-06	-124	02	HL10VBJ5-4	53-30-06-04	-241	06
HL10VBJ5-4	53-20-00-09	-020	04	HL10VBJ5-4	53-30-06-04	-248	01
HL10VBJ5-4	53-21-00-01	-006	AR	HL10VBJ5-4	53-30-06-04	-253	03
HL10VBJ5-4	53-21-00-01	-039	AR	HL10VBJ5-4	53-42-03-01	-029	02
HL10VBJ5-4	53-21-00-01	-124	AR	HL10VBJ5-4	53-42-03-01	-037	03
HL10VBJ5-4	53-21-00-01	-163	AR	HL10VBJ5-4	53-42-03-01	-089	03
HL10VBJ5-4	53-21-00-01	-169	AR	HL10VBJ5-4	53-42-03-01	-103	02
HL10VBJ5-4	53-22-00-02	-024	03	HL10VBJ5-4	53-42-04-04	-025	10
HL10VBJ5-4	53-22-00-02	-030	02	HL10VBJ5-4	53-45-00-01	-008	24
HL10VBJ5-4	53-22-00-05	-167	06	HL10VBJ5-4	53-60-00-05	-009	16
HL10VBJ5-4	53-24-00-01	-023	08	HL10VBJ5-4	53-60-00-05	-013	12
HL10VBJ5-4	53-24-00-01	-031	02	HL10VBJ5-4	53-60-00-06	-004	12
HL10VBJ5-4	53-30-06-01	-006	AR	HL10VBJ5-4	53-60-00-06	-015	08
HL10VBJ5-4	53-30-06-01	-019	AR	HL10VBJ5-4	53-60-00-06	-029	01
HL10VBJ5-4	53-30-06-01	-026	AR	HL10VBJ5-4	53-60-00-07	-308	03
HL10VBJ5-4	53-30-06-01	-083	AR	HL10VBJ5-4	53-60-01-07	-039	AR
HL10VBJ5-4	53-30-06-01	-166	AR	HL10VBJ5-4	53-60-01-07	-080	AR
HL10VBJ5-4	53-30-06-02	-016	AR	HL10VBJ5-4	53-60-01-07	-101	AR
HL10VBJ5-4	53-30-06-02	-107	AR	HL10VBJ5-4	53-60-01-08	-015	09
HL10VBJ5-4	53-30-06-02	-153	AR	HL10VBJ5-4	53-60-01-08	-103	03
HL10VBJ5-4	53-30-06-02	-157	AR	HL10VBJ5-4	53-60-01-08	-154	06
HL10VBJ5-4	53-30-06-02	-162	AR	HL10VBJ5-4	53-60-01-08	-242	06
HL10VBJ5-4	53-30-06-02	-165	AR	HL10VBJ5-4	53-60-01-08	-317	02
HL10VBJ5-4	53-30-06-03	-010	02	HL10VBJ5-4	53-60-01-09	-109	04
HL10VBJ5-4	53-30-06-03	-017	06	HL10VBJ5-4	53-60-01-10	-021	02
HL10VBJ5-4	53-30-06-03	-029	04	HL10VBJ5-4	53-60-01-10	-095	01
HL10VBJ5-4	53-30-06-03	-034	01	HL10VBJ5-4	53-60-01-11	-039	04
HL10VBJ5-4	53-30-06-03	-038	03	HL10VBJ5-4	53-60-01-13	-046	08
HL10VBJ5-4	53-30-06-03	-042	02	HL10VBJ5-4	53-60-02-02	-011	06

© Cessna Aircraft Company

PART NUMBER	CH SEC SUBJ FIG	ITEM	REQ
HL10VBJ5-4	53-60-03-01	-038	06
HL10VBJ5-4	53-60-03-02	-019	01
HL10VBJ5-4	53-60-03-02	-026	02
HL10VBJ5-4	53-60-03-02	-037	02
HL10VBJ5-4	53-60-04-01	-016	06
HL10VBJ5-4	53-60-04-01	-022	04
HL10VBJ5-4	53-60-04-01	-031	04
HL10VBJ5-4	53-60-05-02	-080	02
HL10VBJ5-4	53-60-05-02	-094	02
HL10VBJ5-4	53-60-05-02	-100	06
HL10VBJ5-4	53-60-05-02	-106	06
HL10VBJ5-4	55-30-00-02	-010	17
HL10VBJ5-4	55-30-00-04	-002	02
HL10VBJ5-4	55-30-00-04	-008	02
HL10VBJ5-4	55-30-00-04	-023	02
HL10VBJ5-4	55-30-00-04	-076	02
HL10VBJ5-4	55-30-00-04	-110	10
HL10VBJ5-4	55-30-00-04	-151	02
HL10VBJ5-4	55-30-00-04	-168	02
HL10VBJ5-4	55-30-00-04	-176	02
HL10VBJ5-4	55-30-00-06	-005	06
HL10VBJ5-4	55-30-00-07	-004	04
HL10VBJ5-4	57-10-00-01	-005	01
HL10VBJ5-4	57-10-00-01	-016	04
HL10VBJ5-4	57-10-00-01	-036	04
HL10VBJ5-4	57-10-02-04	-032	08
HL10VBJ5-4	57-10-02-04	-088	08
HL10VBJ5-4	57-10-02-04	-099	14
HL10VBJ5-4	57-10-02-04	-106	02
HL10VBJ5-4	57-10-02-04	-111	12
HL10VBJ5-4	57-10-02-05	-178	AR
HL10VBJ5-4	57-10-02-07	-003	04
HL10VBJ5-4	57-10-02-07	-013	04
HL10VBJ5-4	57-10-02-07	-021	04
HL10VBJ5-4	57-10-02-07	-025	04
HL10VBJ5-4	57-10-02-07	-029	04
HL10VBJ5-4	57-10-02-07	-033	04
HL10VBJ5-4	57-10-02-07	-038	04
HL10VBJ5-4	57-10-02-07	-043	08
HL10VBJ5-4	57-10-02-08	-010	08
HL10VBJ5-4	57-10-02-08	-013	04
HL10VBJ5-4	57-10-02-08	-017	04
HL10VBJ5-4	57-10-02-08	-022	08
HL10VBJ5-4	57-10-02-08	-027	04
HL10VBJ5-4	57-10-02-08	-033	04
HL10VBJ5-4	57-10-02-08	-039	04
HL10VBJ5-4	57-10-02-08	-047	04
HL10VBJ5-4	57-20-00-01	-033	04
HL10VBJ5-4	57-20-00-04	-110	2
HL10VBJ5-4	57-20-00-08	-011	06
HL10VBJ5-4	57-20-00-08	-106	06
HL10VBJ5-4	57-20-00-08	-114	02
HL10VBJ5-4	57-20-00-08	-175	02
HL10VBJ5-4	57-20-00-08	-301	02
HL10VBJ5-4	57-20-01-01	-005	02
HL10VBJ5-4	57-20-01-02	-007	09
HL10VBJ5-4	57-20-01-02	-013	06
HL10VBJ5-4	57-20-01-02	-018	02
HL10VBJ5-4	57-20-01-02	-030	02
HL10VBJ5-4	57-20-01-02	-095	04
HL10VBJ5-4	57-20-01-02	-100	04
HL10VBJ5-4	57-20-01-02	-105	06
HL10VBJ5-4	57-20-01-02	-111	02
HL10VBJ5-4	57-20-01-02	-119	02
HL10VBJ5-4	57-20-01-05	-015	02
HL10VBJ5-4	57-20-01-06	-012	02
HL10VBJ5-4	57-20-01-06	-015	04
HL10VBJ5-4	57-20-01-06	-020	04
HL10VBJ5-4	57-20-01-06	-023	02
HL10VBJ5-4	57-20-01-06	-087	06
HL10VBJ5-4	57-20-01-06	-096	02
HL10VBJ5-4	57-20-01-06	-099	02
HL10VBJ5-4	57-20-01-07	-007	06
HL10VBJ5-4	57-20-01-07	-015	08
HL10VBJ5-4	57-20-01-07	-087	08
HL10VBJ5-4	57-20-01-07	-095	06
HL10VBJ5-4	57-20-01-08	-008	06
HL10VBJ5-4	57-20-01-08	-015	08
HL10VBJ5-4	57-20-01-08	-086	06
HL10VBJ5-4	57-20-01-08	-094	04
HL10VBJ5-4	57-20-01-09	-009	06
HL10VBJ5-4	57-20-01-09	-016	06
HL10VBJ5-4	57-20-01-09	-088	04
HL10VBJ5-4	57-20-01-09	-096	04
HL10VBJ5-4	57-20-01-10	-018	04
HL10VBJ5-4	57-20-01-10	-024	08
HL10VBJ5-4	57-20-01-10	-085	04
HL10VBJ5-4	57-20-01-10	-091	02
HL10VBJ5-4	57-20-01-11	-018	06
HL10VBJ5-4	57-20-01-11	-025	04
HL10VBJ5-4	57-20-01-11	-077	03
HL10VBJ5-4	57-20-01-11	-086	02
HL10VBJ5-4	57-20-01-11	-094	04
HL10VBJ5-4	57-20-01-13	-021	02
HL10VBJ5-4	57-20-01-13	-026	08
HL10VBJ5-4	57-20-01-13	-033	02
HL10VBJ5-4	57-20-01-13	-084	02
HL10VBJ5-4	57-20-01-14	-008	02
HL10VBJ5-4	57-20-01-14	-013	04
HL10VBJ5-4	57-20-01-14	-017	02
HL10VBJ5-4	57-20-01-14	-021	02
HL10VBJ5-4	57-20-01-14	-079	04
HL10VBJ5-4	57-20-01-14	-086	02
HL10VBJ5-4	57-20-01-14	-092	02
HL10VBJ5-4	57-20-01-15	-014	02
HL10VBJ5-4	57-20-01-15	-028	02
HL10VBJ5-4	57-20-01-15	-032	04
HL10VBJ5-4	57-20-01-15	-040	02
HL10VBJ5-4	57-20-01-17	-010	02
HL10VBJ5-4	57-20-01-17	-013	02
HL10VBJ5-4	57-20-01-17	-017	02
HL10VBJ5-4	57-20-01-17	-028	02
HL10VBJ5-4	57-20-01-17	-032	02
HL10VBJ5-4	57-20-01-19	-024	03
HL10VBJ5-4	57-21-01-01	-027	02
HL10VBJ5-4	57-21-01-01	-091	04
HL10VBJ5-4	57-60-00-01	-028	02
HL10VBJ5-5	27-10-15-01	-090	04
HL10VBJ5-5	27-10-15-01	-127	02
HL10VBJ5-5	27-10-30-01	-167	02
HL10VBJ5-5	27-10-30-01	-170	02
HL10VBJ5-5	27-10-50-02	-098	14
HL10VBJ5-5	27-10-50-02	-103	03
HL10VBJ5-5	27-10-50-02	-108	04

© Cessna Aircraft Company

PART NUMBER	CH SEC SUBJ FIG	ITEM	REQ
HL10VBJ5-5	27-10-50-02	-166	04
HL10VBJ5-5	27-30-05-01	-286	16
HL10VBJ5-5	28-20-00-03	-004	04
HL10VBJ5-5	52-10-00-01	-024	24
HL10VBJ5-5	52-10-11-01	-184	02
HL10VBJ5-5	53-12-00-02	-018	15
HL10VBJ5-5	53-12-15-01	-027	24
HL10VBJ5-5	53-22-00-09	-016	09
HL10VBJ5-5	53-22-00-09	-030	08
HL10VBJ5-5	53-22-00-10	-082	12
HL10VBJ5-5	53-22-00-10	-094	06
HL10VBJ5-5	53-23-00-03	-018	22
HL10VBJ5-5	53-24-00-01	-007	06
HL10VBJ5-5	53-24-00-01	-014	08
HL10VBJ5-5	53-24-00-01	-025	02
HL10VBJ5-5	53-24-00-01	-029	04
HL10VBJ5-5	53-24-00-01	-157	02
HL10VBJ5-5	53-24-00-01	-173	04
HL10VBJ5-5	53-30-06-01	-167	AR
HL10VBJ5-5	53-30-06-03	-013	03
HL10VBJ5-5	53-30-06-03	-022	03
HL10VBJ5-5	53-30-06-03	-030	01
HL10VBJ5-5	53-30-06-03	-035	02
HL10VBJ5-5	53-30-06-03	-039	03
HL10VBJ5-5	53-30-06-03	-086	03
HL10VBJ5-5	53-30-06-03	-091	03
HL10VBJ5-5	53-30-06-03	-105	05
HL10VBJ5-5	53-30-06-03	-161	03
HL10VBJ5-5	53-30-06-03	-170	03
HL10VBJ5-5	53-30-06-03	-254	03
HL10VBJ5-5	53-30-06-03	-259	01
HL10VBJ5-5	53-30-06-03	-266	03
HL10VBJ5-5	53-30-06-04	-013	03
HL10VBJ5-5	53-30-06-04	-020	03
HL10VBJ5-5	53-30-06-04	-029	03
HL10VBJ5-5	53-30-06-04	-090	03
HL10VBJ5-5	53-30-06-04	-095	03
HL10VBJ5-5	53-30-06-04	-159	03
HL10VBJ5-5	53-30-06-04	-163	04
HL10VBJ5-5	53-30-06-04	-167	04
HL10VBJ5-5	53-30-06-04	-184	03
HL10VBJ5-5	53-30-06-04	-189	03
HL10VBJ5-5	53-30-06-04	-227	02
HL10VBJ5-5	53-30-06-04	-244	03
HL10VBJ5-5	53-30-06-04	-249	02
HL10VBJ5-5	53-30-06-04	-254	03
HL10VBJ5-5	53-30-06-04	-259	01
HL10VBJ5-5	53-42-03-01	-096	04
HL10VBJ5-5	53-42-04-03	-014	06
HL10VBJ5-5	53-42-04-04	-026	18
HL10VBJ5-5	53-45-00-01	-010	08
HL10VBJ5-5	53-60-00-07	-309	09
HL10VBJ5-5	53-60-01-08	-005	AR
HL10VBJ5-5	53-60-01-08	-016	13
HL10VBJ5-5	53-60-01-08	-088	03
HL10VBJ5-5	53-60-01-08	-304	06
HL10VBJ5-5	53-60-01-10	-049	02
HL10VBJ5-5	53-60-01-10	-096	02
HL10VBJ5-5	53-60-01-10	-123	02
HL10VBJ5-5	53-60-02-01	-009	AR
HL10VBJ5-5	53-60-02-01	-028	20
HL10VBJ5-5	53-60-02-02	-012	06
HL10VBJ5-5	53-60-02-03	-011	02
HL10VBJ5-5	53-60-03-01	-039	04
HL10VBJ5-5	53-60-03-02	-025	02
HL10VBJ5-5	53-60-03-02	-036	06
HL10VBJ5-5	53-60-04-01	-005	02
HL10VBJ5-5	53-60-04-01	-012	04
HL10VBJ5-5	53-60-04-01	-017	02
HL10VBJ5-5	53-60-04-01	-023	01
HL10VBJ5-5	55-10-00-02	-002	13
HL10VBJ5-5	57-10-02-04	-006	10
HL10VBJ5-5	57-10-02-04	-013	08
HL10VBJ5-5	57-10-02-04	-017	03
HL10VBJ5-5	57-10-02-04	-026	06
HL10VBJ5-5	57-10-02-04	-033	08
HL10VBJ5-5	57-10-02-04	-037	02
HL10VBJ5-5	57-10-02-04	-082	02
HL10VBJ5-5	57-10-02-04	-089	08
HL10VBJ5-5	57-10-02-04	-093	02
HL10VBJ5-5	57-10-02-05	-004	02
HL10VBJ5-5	57-10-02-05	-009	01
HL10VBJ5-5	57-10-02-05	-017	02
HL10VBJ5-5	57-10-02-05	-028	AR
HL10VBJ5-5	57-10-02-05	-041	AR
HL10VBJ5-5	57-10-02-05	-078	02
HL10VBJ5-5	57-10-02-05	-083	04
HL10VBJ5-5	57-10-02-05	-090	AR
HL10VBJ5-5	57-10-02-05	-153	02
HL10VBJ5-5	57-10-02-05	-169	04
HL10VBJ5-5	57-10-02-07	-004	22
HL10VBJ5-5	57-10-02-07	-010	26
HL10VBJ5-5	57-10-02-07	-022	03
HL10VBJ5-5	57-10-02-07	-026	02
HL10VBJ5-5	57-10-02-07	-034	04
HL10VBJ5-5	57-10-02-08	-007	24
HL10VBJ5-5	57-10-02-08	-014	04
HL10VBJ5-5	57-10-02-08	-029	04
HL10VBJ5-5	57-10-02-08	-035	04
HL10VBJ5-5	57-10-02-08	-045	02
HL10VBJ5-5	57-20-01-02	-024	04
HL10VBJ5-5	57-20-01-02	-031	02
HL10VBJ5-5	57-20-01-02	-090	02
HL10VBJ5-5	57-20-01-02	-113	02
HL10VBJ5-5	57-20-01-03	-016	03
HL10VBJ5-5	57-20-01-08	-003	02
HL10VBJ5-5	57-20-01-09	-017	02
HL10VBJ5-5	57-20-01-09	-089	02
HL10VBJ5-5	57-20-01-10	-086	02
HL10VBJ5-5	57-20-01-15	-031	04
HL10VBJ5-5	57-21-00-01	-011	01
HL10VBJ5-5	57-21-00-01	-020	01
HL10VBJ5-5	57-21-01-01	-007	05
HL10VBJ5-5	57-21-01-01	-028	03
HL10VBJ5-5	57-21-01-01	-078	08
HL10VBJ5-5	57-21-01-01	-081	10
HL10VBJ5-5	57-60-00-01	-089	04
HL10VBJ5-5	57-70-00-02	-087	03
HL10VBJ5-5	57-70-00-02	-091	03
HL10VBJ5-5	57-70-00-02	-097	03
HL10VBJ5-5	57-70-00-02	-101	03
HL10VBJ5-6	25-70-00-01	-022	01
HL10VBJ5-6	27-13-05-01	-106	04
HL10VBJ5-6	27-60-40-01	-013	08

© Cessna Aircraft Company

PART NUMBER	CH SEC SUBJ FIG	ITEM	REQ	PART NUMBER	CH SEC SUBJ FIG	ITEM	REQ
HL10VBJ5-6	27-60-40-01	-017	06	HL10VBJ5-6	57-20-05-01	-078	02
HL10VBJ5-6	27-60-40-01	-021	03	HL10VBJ5-6	57-20-05-01	-081	02
HL10VBJ5-6	30-10-00-02	-029	04	HL10VBJ5-6	57-20-05-01	-094	02
HL10VBJ5-6	52-10-00-01	-025	04	HL10VBJ5-6	57-60-00-01	-026	01
HL10VBJ5-6	52-10-11-01	-185	02	HL10VBJ5-7	27-13-05-01	-107	02
HL10VBJ5-6	53-12-00-02	-019	03	HL10VBJ5-7	27-60-40-01	-022	03
HL10VBJ5-6	53-12-15-01	-028	04	HL10VBJ5-7	52-10-11-01	-186	02
HL10VBJ5-6	53-22-00-09	-002	AR	HL10VBJ5-7	53-15-00-01	-006	02
HL10VBJ5-6	53-22-00-10	-002	AR	HL10VBJ5-7	53-15-00-02	-007	06
HL10VBJ5-6	53-22-00-10	-098	02	HL10VBJ5-7	53-15-00-02	-154	06
HL10VBJ5-6	53-24-00-01	-024	04	HL10VBJ5-7	53-22-00-05	-158	04
HL10VBJ5-6	53-24-00-01	-030	04	HL10VBJ5-7	53-22-00-06	-021	02
HL10VBJ5-6	53-24-00-01	-077	07	HL10VBJ5-7	53-42-03-01	-008	02
HL10VBJ5-6	53-24-00-01	-158	08	HL10VBJ5-7	53-60-00-07	-252	03
HL10VBJ5-6	53-24-00-01	-165	04	HL10VBJ5-7	53-60-00-07	-326	29
HL10VBJ5-6	53-24-00-01	-174	04	HL10VBJ5-7	53-60-00-07	-384	08
HL10VBJ5-6	53-60-00-07	-310	22	HL10VBJ5-7	53-60-00-07	-397	08
HL10VBJ5-6	53-60-00-07	-325	19	HL10VBJ5-7	53-60-01-08	-306	58
HL10VBJ5-6	53-60-00-07	-383	50	HL10VBJ5-7	53-60-01-08	-319	02
HL10VBJ5-6	53-60-00-07	-396	53	HL10VBJ5-7	53-60-02-03	-013	08
HL10VBJ5-6	53-60-01-08	-006	06	HL10VBJ5-7	55-10-00-02	-009	02
HL10VBJ5-6	53-60-01-08	-305	22	HL10VBJ5-7	55-30-00-02	-227	02
HL10VBJ5-6	53-60-01-08	-318	15	HL10VBJ5-7	55-30-00-02	-236	02
HL10VBJ5-6	53-60-02-01	-013	AR	HL10VBJ5-7	55-30-00-04	-262	02
HL10VBJ5-6	53-60-02-03	-012	06	HL10VBJ5-7	55-30-00-07	-015	26
HL10VBJ5-6	53-60-03-02	-038	01	HL10VBJ5-7	55-30-00-07	-019	02
HL10VBJ5-6	55-30-00-06	-007	05	HL10VBJ5-7	55-30-00-08	-103	38
HL10VBJ5-6	55-30-00-07	-003	06	HL10VBJ5-7	57-10-02-03	-007	56
HL10VBJ5-6	55-30-00-08	-085	08	HL10VBJ5-7	57-10-02-03	-014	04
HL10VBJ5-6	57-10-02-03	-015	38	HL10VBJ5-7	57-10-02-03	-029	04
HL10VBJ5-6	57-10-02-04	-007	02	HL10VBJ5-7	57-10-02-04	-100	04
HL10VBJ5-6	57-10-02-04	-027	02	HL10VBJ5-7	57-10-02-04	-108	09
HL10VBJ5-6	57-10-02-04	-039	09	HL10VBJ5-7	57-10-02-05	-003	02
HL10VBJ5-6	57-10-02-04	-107	08	HL10VBJ5-7	57-10-02-05	-010	02
HL10VBJ5-6	57-10-02-05	-005	02	HL10VBJ5-7	57-10-02-05	-018	02
HL10VBJ5-6	57-10-02-05	-079	02	HL10VBJ5-7	57-10-02-05	-077	02
HL10VBJ5-6	57-10-02-05	-154	02	HL10VBJ5-7	57-10-02-05	-174	01
HL10VBJ5-6	57-10-02-07	-030	04	HL10VBJ5-7	57-10-02-05	-179	AR
HL10VBJ5-6	57-10-02-08	-018	04	HL10VBJ5-7	57-20-01-02	-120	02
HL10VBJ5-6	57-10-02-08	-041	04	HL10VBJ5-7	57-20-01-10	-077	05
HL10VBJ5-6	57-10-02-08	-046	02	HL10VBJ5-7	57-20-01-11	-078	02
HL10VBJ5-6	57-20-00-04	-109	2	HL10VBJ5-7	57-20-01-13	-077	02
HL10VBJ5-6	57-20-00-08	-316	06	HL10VBJ5-7	57-20-01-16	-021	02
HL10VBJ5-6	57-20-01-02	-106	02	HL10VBJ5-7	57-21-01-01	-005	15
HL10VBJ5-6	57-20-01-02	-112	02	HL10VBJ5-8	53-22-00-09	-003	AR
HL10VBJ5-6	57-20-01-06	-090	02	HL10VBJ5-8	53-22-00-09	-007	AR
HL10VBJ5-6	57-20-01-06	-101	02	HL10VBJ5-8	53-22-00-10	-003	AR
HL10VBJ5-6	57-20-01-08	-087	02	HL10VBJ5-8	53-22-00-10	-007	AR
HL10VBJ5-6	57-20-01-08	-095	02	HL10VBJ5-8	53-60-00-07	-253	11
HL10VBJ5-6	57-20-01-09	-003	02	HL10VBJ5-8	53-60-00-07	-327	11
HL10VBJ5-6	57-20-01-10	-019	02	HL10VBJ5-8	53-60-00-07	-385	20
HL10VBJ5-6	57-20-01-10	-092	02	HL10VBJ5-8	53-60-00-07	-398	17
HL10VBJ5-6	57-20-01-14	-009	02	HL10VBJ5-8	53-60-02-02	-013	04
HL10VBJ5-6	57-20-01-14	-080	04	HL10VBJ5-8	53-60-04-01	-018	02
HL10VBJ5-6	57-20-01-14	-093	02	HL10VBJ5-8	53-60-04-01	-024	02
HL10VBJ5-6	57-20-01-15	-023	02	HL10VBJ5-8	55-30-00-07	-020	02
HL10VBJ5-6	57-20-05-01	-006	02	HL10VBJ5-8	55-30-00-08	-101	08
HL10VBJ5-6	57-20-05-01	-019	02	HL10VBJ5-8	57-10-02-03	-008	40
HL10VBJ5-6	57-20-05-01	-025	02	HL10VBJ5-8	57-10-02-04	-008	03
HL10VBJ5-6	57-20-05-01	-028	02	HL10VBJ5-8	57-10-02-04	-040	09
HL10VBJ5-6	57-20-05-01	-034	02	HL10VBJ5-8	57-10-02-05	-180	AR
HL10VBJ5-6	57-20-05-01	-037	02	HL10VBJ5-8	57-20-01-02	-114	02

© Cessna Aircraft Company

PART NUMBER	CH SEC SUBJ FIG	ITEM	REQ	PART NUMBER	CH SEC SUBJ FIG	ITEM	REQ
HL10VBJ5-8	57-20-01-15	-018	02	HL10VBJ6-5	53-60-01-10	-025	02
HL10VBJ5-8	57-20-01-15	-041	02	HL10VBJ6-5	53-60-01-10	-052	02
HL10VBJ5-8	57-20-01-16	-022	01	HL10VBJ6-5	53-60-01-10	-100	02
HL10VBJ5-8	57-21-01-01	-025	01	HL10VBJ6-5	53-60-01-10	-125	02
HL10VBJ5-8	57-60-00-01	-027	01	HL10VBJ6-5	55-30-00-02	-003	10
HL10VBJ5-9	53-60-00-07	-254	06	HL10VBJ6-5	57-10-02-04	-084	03
HL10VBJ5-9	53-60-00-07	-328	25	HL10VBJ6-5	57-10-02-04	-095	04
HL10VBJ5-9	53-60-00-07	-386	06	HL10VBJ6-5	57-10-02-05	-012	02
HL10VBJ5-9	53-60-00-07	-399	06	HL10VBJ6-5	57-20-00-08	-241	02
HL10VBJ5-9	53-60-01-08	-007	06	HL10VBJ6-5	57-20-00-08	-249	02
HL10VBJ5-9	53-60-01-08	-320	20	HL10VBJ6-6	53-10-10-02	-008	06
HL10VBJ5-9	53-60-02-02	-014	06	HL10VBJ6-6	53-10-10-02	-020	06
HL10VBJ5-9	55-30-00-04	-236	07	HL10VBJ6-6	53-10-10-02	-080	05
HL10VBJ5-9	57-10-02-03	-019	04	HL10VBJ6-6	53-10-10-02	-091	05
HL10VBJ5-9	57-10-02-03	-025	04	HL10VBJ6-6	53-24-00-01	-160	04
HL10VBJ5-9	57-10-02-03	-030	02	HL10VBJ6-6	53-60-01-07	-081	AR
HL10VBJ5-9	57-10-02-03	-034	04	HL10VBJ6-6	55-30-00-02	-005	02
HL10VBJ5-9	57-10-02-03	-043	04	HL10VBJ6-6	57-10-02-01	-174	34
HL10VBJ5-9	57-10-02-05	-181	AR	HL10VBJ6-6	57-10-02-04	-042	02
HL10VBJ5-9	57-21-01-01	-024	05	HL10VBJ6-6	57-10-02-04	-085	03
HL10VBJ6-10	53-22-00-09	-020	02	HL10VBJ6-6	57-10-02-04	-115	04
HL10VBJ6-10	53-22-00-09	-034	04	HL10VBJ6-6	57-10-02-05	-013	02
HL10VBJ6-10	53-22-00-10	-101	06	HL10VBJ6-6	57-10-02-05	-020	03
HL10VBJ6-10	55-30-00-08	-080	04	HL10VBJ6-6	57-20-00-08	-020	02
HL10VBJ6-10	57-10-02-05	-159	03	HL10VBJ6-6	57-20-00-08	-026	02
HL10VBJ6-10	57-20-01-03	-006	09	HL10VBJ6-6	57-20-00-08	-091	02
HL10VBJ6-10	57-20-01-04	-012	20	HL10VBJ6-6	57-20-00-08	-250	02
HL10VBJ6-10	57-20-01-04	-019	12	HL10VBJ6-7	53-10-10-02	-003	03
HL10VBJ6-11	55-10-00-01	-168	05	HL10VBJ6-7	53-60-01-01	-035	05
HL10VBJ6-11	57-20-00-08	-305	02	HL10VBJ6-7	53-60-01-03	-038	05
HL10VBJ6-11	57-20-01-03	-007	03	HL10VBJ6-7	53-60-01-06	-009	10
HL10VBJ6-13	57-51-00-01	-022	13	HL10VBJ6-7	55-10-00-01	-103	19
HL10VBJ6-13	57-51-00-01	-032	11	HL10VBJ6-7	55-30-00-02	-008	02
HL10VBJ6-14	57-51-00-01	-023	04	HL10VBJ6-7	55-30-00-08	-099	14
HL10VBJ6-14	57-51-00-01	-033	04	HL10VBJ6-7	57-10-02-01	-178	02
HL10VBJ6-14	57-51-00-01	-106	16	HL10VBJ6-7	57-10-02-04	-096	06
HL10VBJ6-14	57-51-00-01	-115	11	HL10VBJ6-7	57-10-02-04	-102	04
HL10VBJ6-14	57-51-00-01	-176	11	HL10VBJ6-7	57-10-02-04	-113	02
HL10VBJ6-16	57-10-02-01	-179	04	HL10VBJ6-7	57-10-02-05	-158	02
HL10VBJ6-16	57-10-02-01	-576	04	HL10VBJ6-7	57-10-02-05	-163	05
HL10VBJ6-16	57-80-00-01	-029	04	HL10VBJ6-7	57-20-00-08	-154	02
HL10VBJ6-17	27-25-00-01	-010	01	HL10VBJ6-7	57-20-00-08	-174	02
HL10VBJ6-18	27-25-00-01	-011	02	HL10VBJ6-8	53-22-00-09	-019	02
HL10VBJ6-2	57-20-00-08	-036	03	HL10VBJ6-8	53-22-00-10	-085	04
HL10VBJ6-21	57-10-02-01	-186	02	HL10VBJ6-8	55-10-00-01	-104	07
HL10VBJ6-3	53-24-00-01	-078	08	HL10VBJ6-8	55-30-00-06	-020	04
HL10VBJ6-3	53-60-01-02	-031	04	HL10VBJ6-8	57-10-02-01	-180	02
HL10VBJ6-3	53-60-01-05	-038	10	HL10VBJ6-8	57-10-02-04	-010	03
HL10VBJ6-3	57-20-00-08	-159	03	HL10VBJ6-8	57-10-02-04	-029	03
HL10VBJ6-4	53-60-01-08	-244	14	HL10VBJ6-8	57-10-02-04	-043	03
HL10VBJ6-4	53-60-01-10	-051	02	HL10VBJ6-8	57-10-02-05	-021	03
HL10VBJ6-4	55-30-00-07	-007	07	HL10VBJ6-8	57-20-00-08	-306	01
HL10VBJ6-4	55-30-00-08	-081	18	HL10VBJ6-8	57-20-01-06	-080	01
HL10VBJ6-4	57-10-02-07	-015	03	HL10VBJ6-8	57-20-01-08	-077	02
HL10VBJ6-4	57-10-02-07	-018	08	HL10VBJ6-9	53-22-00-09	-033	02
HL10VBJ6-4	57-10-02-07	-040	03	HL10VBJ6-9	53-24-00-01	-159	02
HL10VBJ6-4	57-20-00-08	-242	04	HL10VBJ6-9	53-24-00-01	-166	04
HL10VBJ6-5	53-22-00-09	-018	04	HL10VBJ6-9	55-30-00-02	-007	06
HL10VBJ6-5	53-22-00-09	-032	02	HL10VBJ6-9	57-10-02-01	-181	06
HL10VBJ6-5	53-22-00-10	-084	04	HL10VBJ6-9	57-10-02-04	-103	03
HL10VBJ6-5	53-22-00-10	-100	02	HL10VBJ6-9	57-10-02-04	-116	06
HL10VBJ6-5	53-60-01-07	-082	AR	HL10VBJ6-9	57-20-00-08	-112	02

© Cessna Aircraft Company

PART NUMBER	CH SEC SUBJ FIG	ITEM	REQ
HL10VBJ6-9	57-20-00-08	-307	03
HL10VBJ6-9	57-20-01-03	-008	06
HL10VBJ6-9	57-20-01-06	-081	01
HL10VBJ6-9	57-21-01-01	-023	08
HL10VBJ8-10	55-30-00-06	-003	01
HL10VBJ8-10	55-30-00-08	-078	04
HL10VBJ8-10	55-30-00-08	-097	02
HL10VBJ8-11	27-20-00-01	-002	01
HL10VBJ8-11	57-10-02-01	-575	04
HL10VBJ8-13	27-20-00-01	-003	03
HL10VBJ8-18	57-80-00-01	-008	07
HL10VBJ8-7	55-30-00-02	-009	02
HL10VBJ8-7	55-30-00-07	-010	01
HL10VBJ8-7	55-30-00-07	-013	04
HL10VBJ8-8	55-30-00-02	-004	04
HL10VBJ8-8	55-30-00-06	-019	04
HL10VBJ8-8	55-30-00-07	-009	01
HL10VBJ8-9	55-30-00-02	-006	02
HL10VBJ8-9	55-30-00-06	-004	01
HL11VAZ5-5	33-40-15-01	-005	03
HL11VAZ5-5	33-40-15-01	-016	04
HL11VAZ5-6	33-40-15-01	-010	01
HL11VBJ10-12	57-20-01-04	-010	04
HL11VBJ10-13	57-20-01-04	-011	04
HL11VBJ4-2	53-22-00-02	-020	06
HL11VBJ4-3	52-10-35-01	-079	02
HL11VBJ4-3	53-22-00-05	-154	AR
HL11VBJ4-3	53-22-00-06	-018	AR
HL11VBJ4-3	53-60-01-01	-077	02
HL11VBJ4-3	53-60-01-01	-082	02
HL11VBJ4-3	53-60-01-01	-087	02
HL11VBJ4-3	53-60-01-01	-092	AR
HL11VBJ4-3	53-60-01-02	-077	02
HL11VBJ4-3	53-60-01-02	-087	02
HL11VBJ4-3	53-60-01-02	-092	02
HL11VBJ4-3	53-60-01-02	-097	02
HL11VBJ4-3	53-60-01-03	-077	01
HL11VBJ4-3	53-60-01-03	-082	02
HL11VBJ4-3	53-60-01-03	-087	01
HL11VBJ4-3	53-60-01-03	-092	01
HL11VBJ4-3	53-60-01-04	-085	01
HL11VBJ4-3	53-60-01-04	-090	01
HL11VBJ4-3	53-60-01-04	-095	01
HL11VBJ4-3	53-60-01-04	-100	01
HL11VBJ4-3	53-60-01-05	-013	01
HL11VBJ4-3	53-60-01-05	-020	02
HL11VBJ4-3	53-60-01-06	-017	01
HL11VBJ4-3	53-60-01-06	-024	02
HL11VBJ4-3	53-60-01-09	-019	01
HL11VBJ4-3	53-60-01-09	-085	06
HL11VBJ4-3	53-60-01-10	-032	03
HL11VBJ4-3	53-60-01-10	-038	03
HL11VBJ4-3	53-60-01-10	-110	03
HL11VBJ4-3	53-60-01-10	-116	03
HL11VBJ4-3	53-60-01-11	-033	01
HL11VBJ4-3	53-60-01-11	-037	04
HL11VBJ4-3	53-60-02-04	-006	05
HL11VBJ4-3	53-60-02-04	-014	03
HL11VBJ4-4	27-10-50-02	-155	04
HL11VBJ4-4	53-22-00-05	-156	28
HL11VBJ4-4	53-22-00-06	-019	AR
HL11VBJ4-4	53-50-00-03	-003	01
HL11VBJ4-4	53-60-01-01	-078	02
HL11VBJ4-4	53-60-01-01	-083	02
HL11VBJ4-4	53-60-01-01	-088	02
HL11VBJ4-4	53-60-01-01	-093	AR
HL11VBJ4-4	53-60-01-03	-078	02
HL11VBJ4-4	53-60-01-03	-083	02
HL11VBJ4-4	53-60-01-03	-088	02
HL11VBJ4-4	53-60-01-03	-093	02
HL11VBJ4-4	53-60-01-04	-086	02
HL11VBJ4-4	53-60-01-04	-091	02
HL11VBJ4-4	53-60-01-04	-096	02
HL11VBJ4-4	53-60-01-04	-101	02
HL11VBJ4-4	53-60-01-05	-014	02
HL11VBJ4-4	53-60-01-05	-021	02
HL11VBJ4-4	53-60-01-06	-018	02
HL11VBJ4-4	53-60-01-06	-025	02
HL11VBJ4-4	53-60-01-11	-094	02
HL11VBJ4-4	53-60-01-13	-011	01
HL11VBJ4-4	53-60-02-04	-007	04
HL11VBJ4-4	53-60-02-04	-015	04
HL11VBJ4-4	57-20-00-05	-039	02
HL11VBJ4-5	53-60-01-02	-078	02
HL11VBJ4-5	53-60-01-02	-088	02
HL11VBJ4-5	53-60-01-02	-093	02
HL11VBJ4-5	53-60-01-02	-098	02
HL11VBJ4-5	53-60-02-03	-008	02
HL11VBJ4-6	53-60-02-03	-009	02
HL11VBJ5-10	57-20-01-02	-003	02
HL11VBJ5-10	57-20-01-02	-079	02
HL11VBJ5-10	57-20-01-08	-080	04
HL11VBJ5-10	57-20-01-09	-080	03
HL11VBJ5-10	57-20-01-10	-080	02
HL11VBJ5-10	57-20-01-11	-081	02
HL11VBJ5-10	57-20-01-12	-078	02
HL11VBJ5-10	57-20-01-13	-079	02
HL11VBJ5-10	57-20-01-14	-078	02
HL11VBJ5-10	57-20-01-15	-007	11
HL11VBJ5-10	57-21-01-01	-084	02
HL11VBJ5-11	57-20-01-02	-080	02
HL11VBJ5-11	57-20-01-06	-079	06
HL11VBJ5-12	57-20-01-02	-081	06
HL11VBJ5-14	57-20-01-01	-079	04
HL11VBJ5-2	27-10-15-01	-097	04
HL11VBJ5-2	27-10-15-01	-119	02
HL11VBJ5-2	53-24-00-01	-034	02
HL11VBJ5-2	57-20-00-08	-037	06
HL11VBJ5-2	57-20-00-08	-079	04
HL11VBJ5-2	57-20-00-08	-086	06
HL11VBJ5-2	57-20-00-08	-099	13
HL11VBJ5-2	57-60-00-01	-105	08
HL11VBJ5-3	27-10-30-01	-527	04
HL11VBJ5-3	52-10-21-01	-095	12
HL11VBJ5-3	53-20-00-04	-023	04
HL11VBJ5-3	53-20-00-04	-031	04
HL11VBJ5-3	53-20-00-05	-022	04
HL11VBJ5-3	53-20-00-05	-030	04
HL11VBJ5-3	53-20-00-06	-013	04
HL11VBJ5-3	53-20-00-06	-019	02
HL11VBJ5-3	53-20-00-07	-018	04
HL11VBJ5-3	53-20-00-07	-026	02
HL11VBJ5-3	53-20-00-08	-019	04
HL11VBJ5-3	53-20-00-09	-006	06

© Cessna Aircraft Company

PART NUMBER	CH SEC SUBJ FIG	ITEM	REQ	PART NUMBER	CH SEC SUBJ FIG	ITEM	REQ
HL11VBJ5-3	53-20-00-09	-018	02	HL11VBJ5-4	53-21-00-02	-011	AR
HL11VBJ5-3	53-20-00-12	-033	06	HL11VBJ5-4	53-21-00-02	-016	AR
HL11VBJ5-3	53-22-00-01	-011	09	HL11VBJ5-4	53-21-00-02	-022	AR
HL11VBJ5-3	53-22-00-01	-082	09	HL11VBJ5-4	53-21-00-02	-026	AR
HL11VBJ5-3	53-22-00-02	-008	12	HL11VBJ5-4	53-21-00-02	-076	AR
HL11VBJ5-3	53-22-00-02	-082	12	HL11VBJ5-4	53-21-00-02	-087	AR
HL11VBJ5-3	53-22-00-03	-083	12	HL11VBJ5-4	53-21-00-02	-091	AR
HL11VBJ5-3	53-22-00-04	-010	12	HL11VBJ5-4	53-22-00-01	-012	11
HL11VBJ5-3	53-22-00-04	-081	12	HL11VBJ5-4	53-22-00-01	-083	15
HL11VBJ5-3	53-22-00-05	-007	12	HL11VBJ5-4	53-22-00-02	-009	16
HL11VBJ5-3	53-22-00-07	-020	03	HL11VBJ5-4	53-22-00-02	-083	16
HL11VBJ5-3	53-22-00-07	-090	03	HL11VBJ5-4	53-22-00-03	-012	12
HL11VBJ5-3	53-22-00-07	-166	03	HL11VBJ5-4	53-22-00-03	-084	16
HL11VBJ5-3	53-22-00-08	-017	03	HL11VBJ5-4	53-22-00-04	-011	16
HL11VBJ5-3	53-22-00-08	-093	03	HL11VBJ5-4	53-22-00-04	-082	16
HL11VBJ5-3	53-22-00-18	-012	12	HL11VBJ5-4	53-22-00-05	-008	16
HL11VBJ5-3	53-22-00-19	-013	12	HL11VBJ5-4	53-22-00-07	-021	04
HL11VBJ5-3	53-30-06-01	-005	AR	HL11VBJ5-4	53-22-00-07	-091	04
HL11VBJ5-3	53-30-06-01	-017	AR	HL11VBJ5-4	53-22-00-07	-167	04
HL11VBJ5-3	53-30-06-01	-165	AR	HL11VBJ5-4	53-22-00-08	-018	04
HL11VBJ5-3	53-30-06-02	-005	AR	HL11VBJ5-4	53-22-00-08	-094	04
HL11VBJ5-3	53-30-06-02	-023	AR	HL11VBJ5-4	53-22-00-18	-013	16
HL11VBJ5-3	53-38-00-01	-029	06	HL11VBJ5-4	53-22-00-19	-014	16
HL11VBJ5-3	53-60-01-08	-084	10	HL11VBJ5-4	53-24-00-01	-245	04
HL11VBJ5-3	53-60-01-08	-099	10	HL11VBJ5-4	53-24-00-01	-268	AR
HL11VBJ5-3	53-60-01-08	-164	06	HL11VBJ5-4	53-24-00-01	-284	AR
HL11VBJ5-3	53-60-01-08	-229	12	HL11VBJ5-4	53-30-06-03	-261	02
HL11VBJ5-3	53-60-01-08	-235	06	HL11VBJ5-4	53-30-06-04	-261	02
HL11VBJ5-3	53-60-01-10	-016	02	HL11VBJ5-4	53-60-00-07	-007	08
HL11VBJ5-3	53-60-01-10	-022	08	HL11VBJ5-4	53-60-00-07	-084	11
HL11VBJ5-3	53-60-01-10	-090	02	HL11VBJ5-4	53-60-00-07	-097	11
HL11VBJ5-3	53-60-01-10	-097	08	HL11VBJ5-4	53-60-00-07	-170	11
HL11VBJ5-3	53-60-01-10	-107	03	HL11VBJ5-4	53-60-00-07	-232	11
HL11VBJ5-3	53-60-01-13	-039	21	HL11VBJ5-4	53-60-00-07	-242	02
HL11VBJ5-3	55-30-00-04	-237	08	HL11VBJ5-4	53-60-01-07	-100	AR
HL11VBJ5-3	57-20-00-08	-105	08	HL11VBJ5-4	53-60-01-08	-085	06
HL11VBJ5-3	57-20-00-08	-161	05	HL11VBJ5-4	53-60-01-08	-100	06
HL11VBJ5-3	57-20-00-08	-169	06	HL11VBJ5-4	53-60-01-08	-165	06
HL11VBJ5-3	57-20-00-08	-184	12	HL11VBJ5-4	53-60-01-08	-236	06
HL11VBJ5-3	57-20-00-08	-329	14	HL11VBJ5-4	53-60-01-10	-023	05
HL11VBJ5-3	57-20-01-02	-004	22	HL11VBJ5-4	53-60-01-10	-030	06
HL11VBJ5-4	27-10-30-01	-476	04	HL11VBJ5-4	53-60-01-10	-098	03
HL11VBJ5-4	52-10-00-01	-013	04	HL11VBJ5-4	53-60-01-10	-108	03
HL11VBJ5-4	53-20-00-04	-024	10	HL11VBJ5-4	53-60-01-11	-043	01
HL11VBJ5-4	53-20-00-04	-032	10	HL11VBJ5-4	53-60-01-12	-002	16
HL11VBJ5-4	53-20-00-05	-023	10	HL11VBJ5-4	53-60-02-02	-002	52
HL11VBJ5-4	53-20-00-05	-031	10	HL11VBJ5-4	53-60-02-03	-002	26
HL11VBJ5-4	53-20-00-06	-014	10	HL11VBJ5-4	53-60-02-04	-004	02
HL11VBJ5-4	53-20-00-06	-020	06	HL11VBJ5-4	53-60-02-04	-012	02
HL11VBJ5-4	53-20-00-07	-019	10	HL11VBJ5-4	57-20-00-03	-018	AR
HL11VBJ5-4	53-20-00-07	-027	12	HL11VBJ5-4	57-20-00-08	-330	14
HL11VBJ5-4	53-20-00-08	-021	18	HL11VBJ5-4	57-20-01-01	-077	43
HL11VBJ5-4	53-20-00-09	-007	08	HL11VBJ5-4	57-20-01-02	-005	33
HL11VBJ5-4	53-20-00-09	-019	06	HL11VBJ5-4	57-20-01-02	-082	24
HL11VBJ5-4	53-20-00-12	-034	08	HL11VBJ5-4	57-20-01-06	-077	07
HL11VBJ5-4	53-21-00-01	-002	AR	HL11VBJ5-4	57-20-01-08	-078	01
HL11VBJ5-4	53-21-00-01	-048	AR	HL11VBJ5-4	57-20-01-10	-078	09
HL11VBJ5-4	53-21-00-01	-084	AR	HL11VBJ5-4	57-50-00-01	-011	05
HL11VBJ5-4	53-21-00-01	-087	AR	HL11VBJ5-4	57-50-00-01	-041	07
HL11VBJ5-4	53-21-00-01	-095	AR	HL11VBJ5-4	57-60-00-01	-106	08
HL11VBJ5-4	53-21-00-01	-100	AR	HL11VBJ5-5	53-20-00-06	-021	06
HL11VBJ5-4	53-21-00-02	-007	AR	HL11VBJ5-5	53-20-00-08	-022	02

© Cessna Aircraft Company

PART NUMBER	CH SEC SUBJ FIG	ITEM	REQ	PART NUMBER	CH SEC SUBJ FIG	ITEM	REQ
HL11VBJ5-5	53-20-00-09	-021	02	HL11VBJ5-7	52-10-22-02	-268	04
HL11VBJ5-5	53-22-00-01	-013	04	HL11VBJ5-7	53-60-01-13	-018	04
HL11VBJ5-5	53-22-00-01	-084	04	HL11VBJ5-7	53-60-02-02	-007	06
HL11VBJ5-5	53-22-00-03	-013	16	HL11VBJ5-7	53-60-02-03	-005	12
HL11VBJ5-5	53-22-00-09	-029	02	HL11VBJ5-7	57-20-00-08	-100	02
HL11VBJ5-5	53-22-00-09	-156	72	HL11VBJ5-7	57-20-01-02	-085	10
HL11VBJ5-5	53-22-00-09	-162	28	HL11VBJ5-7	57-20-01-09	-079	02
HL11VBJ5-5	53-22-00-09	-168	28	HL11VBJ5-7	57-20-01-11	-079	02
HL11VBJ5-5	53-22-00-09	-174	28	HL11VBJ5-7	57-20-01-12	-077	02
HL11VBJ5-5	53-22-00-10	-096	02	HL11VBJ5-7	57-20-01-13	-011	01
HL11VBJ5-5	53-22-00-10	-110	18	HL11VBJ5-7	57-20-01-13	-078	02
HL11VBJ5-5	53-22-00-10	-119	18	HL11VBJ5-7	57-20-01-14	-077	02
HL11VBJ5-5	53-24-00-01	-090	04	HL11VBJ5-7	57-20-01-16	-020	01
HL11VBJ5-5	53-24-00-01	-237	03	HL11VBJ5-7	57-50-00-01	-044	02
HL11VBJ5-5	53-24-00-01	-269	AR	HL11VBJ5-8	53-60-02-02	-005	14
HL11VBJ5-5	53-24-00-01	-285	AR	HL11VBJ5-8	53-60-02-03	-006	16
HL11VBJ5-5	53-60-00-07	-008	24	HL11VBJ5-8	57-20-01-01	-003	02
HL11VBJ5-5	53-60-00-07	-085	21	HL11VBJ5-8	57-20-01-02	-086	04
HL11VBJ5-5	53-60-00-07	-098	21	HL11VBJ5-8	57-20-01-10	-009	01
HL11VBJ5-5	53-60-00-07	-171	06	HL11VBJ5-8	57-20-01-10	-013	01
HL11VBJ5-5	53-60-00-07	-233	06	HL11VBJ5-8	57-20-01-11	-013	01
HL11VBJ5-5	53-60-01-07	-099	AR	HL11VBJ5-8	57-20-01-13	-012	01
HL11VBJ5-5	53-60-01-08	-086	16	HL11VBJ5-8	57-20-01-13	-016	01
HL11VBJ5-5	53-60-01-08	-101	14	HL11VBJ5-8	57-50-00-01	-045	16
HL11VBJ5-5	53-60-01-13	-017	08	HL11VBJ5-9	53-60-02-02	-006	16
HL11VBJ5-5	53-60-02-01	-010	04	HL11VBJ5-9	57-20-01-01	-004	02
HL11VBJ5-5	53-60-02-02	-003	26	HL11VBJ5-9	57-20-01-01	-078	04
HL11VBJ5-5	53-60-02-03	-003	20	HL11VBJ5-9	57-20-01-02	-006	02
HL11VBJ5-5	57-20-00-03	-017	16	HL11VBJ5-9	57-20-01-09	-004	01
HL11VBJ5-5	57-20-00-08	-162	03	HL11VBJ5-9	57-20-01-10	-079	02
HL11VBJ5-5	57-20-01-02	-083	19	HL11VBJ5-9	57-20-01-11	-080	01
HL11VBJ5-5	57-20-01-08	-079	01	HL11VBJ5-9	57-50-00-01	-012	03
HL11VBJ5-5	57-20-01-09	-077	23	HL11VBJ5-9	57-50-00-01	-046	21
HL11VBJ5-5	57-20-05-01	-003	01	HL11VBJ6-10	57-10-03-06	-020	10
HL11VBJ5-5	57-20-05-01	-016	01	HL11VBJ6-10	57-20-00-08	-232	02
HL11VBJ5-5	57-20-05-01	-024	02	HL11VBJ6-10	57-20-01-02	-087	04
HL11VBJ5-5	57-20-05-01	-033	02	HL11VBJ6-10	57-20-01-04	-005	04
HL11VBJ5-5	57-20-05-01	-077	02	HL11VBJ6-10	57-20-01-07	-077	02
HL11VBJ5-5	57-20-05-01	-091	02	HL11VBJ6-11	57-10-03-06	-021	54
HL11VBJ5-5	57-40-10-01	-003	08	HL11VBJ6-11	57-20-01-02	-088	04
HL11VBJ5-5	57-50-00-01	-042	02	HL11VBJ6-11	57-20-01-04	-006	04
HL11VBJ5-5	57-60-00-01	-091	06	HL11VBJ6-12	57-10-03-06	-022	06
HL11VBJ5-6	27-10-30-01	-459	05	HL11VBJ6-12	57-20-01-02	-089	08
HL11VBJ5-6	53-22-00-09	-157	32	HL11VBJ6-12	57-20-01-03	-004	03
HL11VBJ5-6	53-22-00-09	-163	08	HL11VBJ6-12	57-20-01-03	-012	02
HL11VBJ5-6	53-22-00-09	-169	08	HL11VBJ6-12	57-20-01-04	-007	03
HL11VBJ5-6	53-22-00-09	-175	08	HL11VBJ6-12	57-20-01-04	-016	02
HL11VBJ5-6	53-24-00-01	-246	04	HL11VBJ6-13	57-20-01-04	-008	04
HL11VBJ5-6	53-60-00-07	-009	34	HL11VBJ6-15	57-20-01-04	-009	06
HL11VBJ5-6	53-60-00-07	-086	34	HL11VBJ6-18	57-51-00-01	-024	03
HL11VBJ5-6	53-60-00-07	-099	34	HL11VBJ6-18	57-51-00-01	-034	03
HL11VBJ5-6	53-60-00-07	-157	17	HL11VBJ6-18	57-51-00-01	-107	03
HL11VBJ5-6	53-60-02-02	-004	18	HL11VBJ6-18	57-51-00-01	-116	03
HL11VBJ5-6	53-60-02-03	-004	34	HL11VBJ6-18	57-51-00-01	-177	03
HL11VBJ5-6	56-15-00-01	-090	02	HL11VBJ6-18	57-51-00-01	-186	07
HL11VBJ5-6	57-20-00-03	-019	66	HL11VBJ6-2	57-20-00-08	-009	08
HL11VBJ5-6	57-20-00-08	-331	08	HL11VBJ6-2	57-20-00-08	-035	04
HL11VBJ5-6	57-20-01-02	-084	14	HL11VBJ6-2	57-20-00-08	-077	05
HL11VBJ5-6	57-20-01-06	-078	09	HL11VBJ6-2	57-20-00-08	-084	04
HL11VBJ5-6	57-20-01-09	-078	02	HL11VBJ6-2	57-20-00-08	-097	04
HL11VBJ5-6	57-40-10-01	-004	32	HL11VBJ6-3	57-20-00-08	-158	02
HL11VBJ5-6	57-50-00-01	-043	04	HL11VBJ6-3	57-20-00-08	-182	04

© Cessna Aircraft Company

PART NUMBER	CH SEC SUBJ FIG	ITEM	REQ
HL11VBJ6-4	55-30-00-08	-088	03
HL11VBJ6-4	57-20-00-08	-010	02
HL11VBJ6-5	55-30-00-08	-089	15
HL11VBJ6-5	55-30-00-08	-090	04
HL11VBJ6-5	55-30-00-08	-095	06
HL11VBJ6-5	57-10-03-06	-015	14
HL11VBJ6-5	57-20-00-08	-078	05
HL11VBJ6-5	57-20-00-08	-085	05
HL11VBJ6-5	57-20-00-08	-160	02
HL11VBJ6-5	57-20-00-08	-167	03
HL11VBJ6-5	57-20-00-08	-234	06
HL11VBJ6-5	57-20-00-08	-314	17
HL11VBJ6-6	55-30-00-08	-091	05
HL11VBJ6-6	55-30-00-08	-092	09
HL11VBJ6-6	57-10-03-06	-016	20
HL11VBJ6-6	57-20-00-08	-098	02
HL11VBJ6-6	57-20-00-08	-107	03
HL11VBJ6-6	57-20-00-08	-233	22
HL11VBJ6-6	57-20-01-03	-003	35
HL11VBJ6-7	53-10-10-02	-015	03
HL11VBJ6-7	57-10-03-06	-017	14
HL11VBJ6-7	57-20-00-08	-168	05
HL11VBJ6-7	57-20-00-08	-231	44
HL11VBJ6-7	57-20-01-04	-003	49
HL11VBJ6-7	57-50-00-01	-007	06
HL11VBJ6-8	57-10-03-06	-018	60
HL11VBJ6-8	57-20-00-08	-183	03
HL11VBJ6-8	57-20-00-08	-230	46
HL11VBJ6-8	57-50-00-01	-008	03
HL11VBJ6-9	57-10-03-06	-019	22
HL11VBJ6-9	57-20-00-08	-235	08
HL11VBJ6-9	57-20-01-04	-004	04
HL11VBJ6-9	57-50-00-01	-009	07
HL11VBJ8-12	57-20-01-03	-005	04
HL11VBJ8-8	57-20-00-08	-228	08
HL12VBJ-6-4	53-20-00-02	-004	02
HL12VBJ12-12	57-20-01-04	-022	04
HL12VBJ12-13	57-20-01-04	-023	02
HL12VBJ12-14	57-20-01-04	-024	02
HL12VBJ5-10	57-10-02-01	-198	02
HL12VBJ5-11	57-10-02-01	-195	02
HL12VBJ5-11	57-10-02-01	-201	04
HL12VBJ5-12	57-10-02-01	-202	02
HL12VBJ5-13	55-10-00-01	-010	01
HL12VBJ5-13	57-10-02-01	-203	02
HL12VBJ5-14	57-10-02-01	-204	02
HL12VBJ5-2	28-11-55-01	-081	04
HL12VBJ5-2	57-20-05-02	-017	02
HL12VBJ5-2	57-20-05-02	-081	02
HL12VBJ5-2	57-20-05-02	-085	02
HL12VBJ5-3	22-10-10-01	-014	02
HL12VBJ5-3	27-30-05-01	-285	08
HL12VBJ5-3	53-20-00-06	-118	12
HL12VBJ5-3	55-30-00-04	-252	04
HL12VBJ5-3	57-20-05-02	-004	02
HL12VBJ5-4	22-10-10-01	-007	04
HL12VBJ5-4	52-10-21-01	-163	05
HL12VBJ5-6	55-30-00-08	-020	04
HL12VBJ5-6	55-30-00-08	-025	04
HL12VBJ5-7	53-22-00-05	-083	08
HL12VBJ5-8	55-10-00-01	-090	42
HL12VBJ5-8	57-10-02-01	-196	30
HL12VBJ5-8	57-10-02-01	-200	06
HL12VBJ5-8	57-20-01-15	-038	02
HL12VBJ5-9	55-10-00-01	-009	08
HL12VBJ5-9	55-10-00-01	-091	06
HL12VBJ5-9	57-10-02-01	-199	04
HL12VBJ6-10	55-10-00-01	-092	02
HL12VBJ6-10	57-10-02-01	-544	54
HL12VBJ6-11	55-10-00-01	-093	02
HL12VBJ6-13	27-11-00-01	-237	01
HL12VBJ6-13	57-10-02-01	-567	04
HL12VBJ6-7	55-10-00-01	-094	40
HL12VBJ6-8	28-11-55-01	-005	08
HL12VBJ8-10	55-10-00-01	-095	08
HL12VBJ8-11	55-10-00-01	-096	08
HL12VBJ8-11	57-20-00-08	-176	01
HL12VBJ8-12	57-10-02-01	-569	16
HL12VBJ8-13	57-10-02-01	-568	04
HL12VBJ8-13	57-20-00-08	-115	01
HL12VBJ8-16	57-10-02-01	-570	20
HL13VBJ5-4	53-60-00-07	-244	09
HL13VBJ5-5	53-24-00-01	-275	16
HL13VBJ5-5	53-60-00-07	-245	06
HL13VBJ5-6	53-24-00-01	-276	08
HL18PB-10-15	52-10-35-01	-084	01
HL18PB-12-32	27-10-30-01	-388	01
HL18PB-5-11	55-10-00-01	-164A	04
HL18PB-5-11	55-10-00-01	-172	05
HL18PB-5-14	55-10-00-01	-165A	05
HL18PB-5-18	55-10-00-01	-166A	02
HL18PB10-11	57-10-02-01	-419	01
HL18PB10-11	57-10-02-01	-477	01
HL18PB10-12	57-10-02-01	-491	01
HL18PB10-14	52-10-22-02	-003	02
HL18PB10-14	52-10-22-02	-014	02
HL18PB10-14	52-10-22-02	-036	01
HL18PB10-15	57-10-02-01	-535	01
HL18PB10-16	57-10-02-01	-512	01
HL18PB10-18	57-10-02-01	-511	01
HL18PB10-18	57-10-02-01	-534	01
HL18PB5-10	57-10-02-01	-247	02
HL18PB5-10	57-10-02-01	-260	02
HL18PB5-10	57-10-02-01	-267	04
HL18PB5-10	57-10-02-01	-276	05
HL18PB5-11	28-20-00-03	-258	05
HL18PB5-12	55-30-00-02	-178	04
HL18PB5-12	55-30-00-05	-077	08
HL18PB5-12	55-30-00-05	-152	08
HL18PB5-12	57-10-02-01	-275	05
HL18PB5-13	55-30-00-02	-161	04
HL18PB5-14	57-10-02-01	-170	02
HL18PB5-14	57-10-02-01	-246	02
HL18PB5-15	57-10-02-01	-509	02
HL18PB5-18	57-10-02-01	-510	01
HL18PB5-2	55-30-00-05	-003	04
HL18PB5-2	55-30-00-05	-022	06
HL18PB5-3	53-20-02-01	-107	16
HL18PB5-3	55-30-00-02	-076	30
HL18PB5-3	55-30-00-05	-004	02
HL18PB5-3	55-30-00-05	-023	06
HL18PB5-4	53-20-02-01	-094	08
HL18PB5-4	53-20-02-01	-102	04
HL18PB5-4	55-30-00-02	-080	04

© Cessna Aircraft Company

PART NUMBER	CH SEC SUBJ FIG	ITEM	REQ
HL18PB5-4	57-10-02-01	-507	04
HL18PB5-4	57-20-01-06	-014	04
HL18PB5-4	57-20-01-06	-022	02
HL18PB5-4	57-20-01-06	-098	02
HL18PB5-4	57-20-01-11	-019	02
HL18PB5-4	57-20-01-11	-026	02
HL18PB5-5	53-20-02-01	-103	05
HL18PB5-5	55-30-00-02	-089	06
HL18PB5-5	55-30-00-05	-086	04
HL18PB5-5	55-30-00-05	-161	04
HL18PB5-5	57-10-02-01	-460	03
HL18PB5-5	57-20-00-06	-004	10
HL18PB5-5	57-20-00-07	-053	01
HL18PB5-5	57-20-01-11	-099	02
HL18PB5-6	53-20-02-01	-086	02
HL18PB5-6	53-20-02-01	-092	02
HL18PB5-6	53-20-02-01	-104	02
HL18PB5-6	55-30-00-05	-096	06
HL18PB5-6	55-30-00-05	-171	06
HL18PB5-6	57-10-02-01	-461	02
HL18PB5-6	57-20-00-06	-005	20
HL18PB5-6	57-20-01-06	-089	02
HL18PB5-6	57-20-01-06	-100	02
HL18PB5-6	57-20-01-11	-027	02
HL18PB5-6	57-20-01-11	-087	02
HL18PB5-7	55-30-00-02	-090	28
HL18PB5-7	55-30-00-05	-180	06
HL18PB5-7	57-10-02-01	-508	02
HL18PB5-7	57-10-02-03	-038	04
HL18PB5-7	57-20-00-06	-006	06
HL18PB5-8	55-30-00-02	-021	02
HL18PB5-8	55-30-00-05	-103	08
HL18PB5-8	55-30-00-05	-181	08
HL18PB5-8	55-30-00-08	-002	AR
HL18PB5-8	57-20-00-06	-007	04
HL18PB5-9	55-30-00-05	-076	02
HL18PB5-9	55-30-00-05	-104	02
HL18PB5-9	55-30-00-05	-151	02
HL18PB5-9	57-10-02-01	-173	04
HL18PB5-9	57-10-02-01	-462	04
HL18PB5-9	57-10-02-03	-039	02
HL18PB6-10	55-30-00-02	-025	07
HL18PB6-10	55-30-00-02	-032	18
HL18PB6-10	57-10-02-01	-003	02
HL18PB6-10	57-10-02-01	-087	06
HL18PB6-10	57-10-02-01	-098	02
HL18PB6-10	57-10-02-01	-183	02
HL18PB6-10	57-10-02-01	-248	02
HL18PB6-10	57-10-02-01	-259	02
HL18PB6-10	57-10-02-01	-321	08
HL18PB6-10	57-10-02-06	-093	AR
HL18PB6-10	57-10-03-06	-027	02
HL18PB6-10	57-80-00-01	-016	04
HL18PB6-11	55-30-00-02	-033	02
HL18PB6-11	57-10-02-01	-096	08
HL18PB6-11	57-10-02-01	-184	02
HL18PB6-12	55-30-00-02	-034	06
HL18PB6-12	57-10-02-01	-002	02
HL18PB6-12	57-10-02-01	-185	02
HL18PB6-13	55-30-00-02	-035	02
HL18PB6-13	57-10-02-06	-095	AR
HL18PB6-14	55-30-00-02	-036	06
HL18PB6-14	57-10-02-01	-400	02
HL18PB6-15	55-30-00-02	-037	04
HL18PB6-15	57-80-00-01	-015	04
HL18PB6-16	55-30-00-02	-038	02
HL18PB6-17	55-30-00-02	-039	10
HL18PB6-19	55-30-00-02	-040	02
HL18PB6-4	57-10-02-01	-005	05
HL18PB6-4	57-10-02-01	-121	01
HL18PB6-5	57-10-02-01	-007	02
HL18PB6-5	57-10-02-01	-109	01
HL18PB6-5	57-10-02-01	-153	01
HL18PB6-5	57-10-02-01	-308	01
HL18PB6-5	57-10-02-01	-327	01
HL18PB6-5	57-10-02-01	-339	01
HL18PB6-5	57-10-02-01	-351	01
HL18PB6-6	57-10-02-01	-006	01
HL18PB6-6	57-10-02-01	-099	01
HL18PB6-6	57-10-02-01	-104	02
HL18PB6-6	57-10-02-01	-112	02
HL18PB6-6	57-10-02-01	-122	05
HL18PB6-6	57-10-02-01	-127	02
HL18PB6-6	57-10-02-01	-155	02
HL18PB6-6	57-10-02-01	-164	01
HL18PB6-6	57-10-02-01	-167	02
HL18PB6-6	57-10-02-01	-310	02
HL18PB6-6	57-10-02-01	-314	01
HL18PB6-6	57-10-02-01	-317	02
HL18PB6-6	57-10-02-01	-329	02
HL18PB6-6	57-10-02-01	-341	02
HL18PB6-6	57-10-02-06	-156	AR
HL18PB6-6	57-10-03-06	-025	10
HL18PB6-7	55-30-00-02	-022	06
HL18PB6-7	55-30-00-02	-029	16
HL18PB6-7	55-30-00-05	-098	06
HL18PB6-7	55-30-00-05	-173	04
HL18PB6-7	55-30-00-05	-176	02
HL18PB6-7	57-10-02-01	-097	05
HL18PB6-7	57-10-02-01	-110	03
HL18PB6-7	57-10-02-01	-115	02
HL18PB6-7	57-10-02-01	-152	03
HL18PB6-7	57-10-02-01	-159	02
HL18PB6-7	57-10-02-01	-165	03
HL18PB6-7	57-10-02-01	-302	02
HL18PB6-7	57-10-02-01	-307	04
HL18PB6-7	57-10-02-01	-315	04
HL18PB6-7	57-10-02-01	-326	04
HL18PB6-7	57-10-02-01	-333	02
HL18PB6-7	57-10-02-01	-338	04
HL18PB6-7	57-10-02-01	-344	02
HL18PB6-7	57-10-02-01	-350	04
HL18PB6-7	57-10-02-01	-353	02
HL18PB6-7	57-10-02-06	-157	AR
HL18PB6-8	55-30-00-02	-030	30
HL18PB6-8	55-30-00-05	-099	04
HL18PB6-8	55-30-00-05	-174	04
HL18PB6-8	57-10-02-01	-086	02
HL18PB6-8	57-10-02-01	-105	10
HL18PB6-8	57-10-02-01	-116	02
HL18PB6-8	57-10-02-01	-128	10
HL18PB6-8	57-10-02-01	-320	02
HL18PB6-8	57-10-02-01	-346	04
HL18PB6-8	57-10-02-01	-407	01

© Cessna Aircraft Company

PART NUMBER	CH SEC SUBJ FIG	ITEM	REQ	PART NUMBER	CH SEC SUBJ FIG	ITEM	REQ
HL18PB6-8	57-10-02-01	-421	01	HL19PB5-4	55-30-00-01	-008	04
HL18PB6-8	57-10-02-06	-091	AR	HL19PB5-4	55-30-00-02	-091	20
HL18PB6-8	57-10-02-06	-158	AR	HL19PB5-7	27-30-05-01	-005	01
HL18PB6-8	57-10-03-06	-026	06	HL19PB5-7	57-20-00-03	-005	06
HL18PB6-9	55-30-00-02	-031	32	HL19PB6-10	55-30-00-05	-156	02
HL18PB6-9	57-10-02-01	-004	02	HL19PB6-10	55-30-00-05	-165	02
HL18PB6-9	57-10-02-01	-095	02	HL19PB6-10	57-10-02-06	-088	AR
HL18PB6-9	57-10-02-01	-117	08	HL19PB6-10	57-10-02-06	-225	AR
HL18PB6-9	57-10-02-01	-160	10	HL19PB6-11	55-30-00-05	-081	02
HL18PB6-9	57-10-02-01	-303	10	HL19PB6-11	55-30-00-05	-089	02
HL18PB6-9	57-10-02-01	-322	02	HL19PB6-11	55-30-00-08	-008	08
HL18PB6-9	57-10-02-01	-334	10	HL19PB6-12	55-30-00-05	-157	04
HL18PB6-9	57-10-02-01	-345	06	HL19PB6-12	55-30-00-05	-166	04
HL18PB6-9	57-10-02-01	-463	01	HL19PB6-12	55-30-00-08	-009	02
HL18PB6-9	57-10-02-01	-479	01	HL19PB6-12	57-10-02-06	-081	AR
HL18PB6-9	57-10-02-01	-493	01	HL19PB6-12	57-10-02-06	-226	AR
HL18PB6-9	57-10-02-06	-159	AR	HL19PB6-13	55-30-00-05	-082	04
HL18PB8-10	57-10-02-01	-405	01	HL19PB6-13	55-30-00-05	-091	04
HL18PB8-10	57-10-02-01	-464	01	HL19PB6-13	55-30-00-08	-010	03
HL18PB8-10	57-10-02-06	-094	AR	HL19PB6-13	55-30-00-08	-011	01
HL18PB8-11	57-10-02-01	-172	04	HL19PB6-13	57-10-02-06	-227	AR
HL18PB8-11	57-10-02-01	-465	01	HL19PB6-14	55-30-00-05	-158	02
HL18PB8-11	57-10-02-01	-478	01	HL19PB6-14	55-30-00-05	-167	02
HL18PB8-11	57-10-02-01	-492	01	HL19PB6-14	57-10-02-06	-090	AR
HL18PB8-12	57-10-02-01	-536	01	HL19PB6-14	57-10-02-06	-228	AR
HL18PB8-13	57-10-02-06	-096	AR	HL19PB6-15	55-30-00-05	-083	02
HL18PB8-14	57-10-02-01	-171	02	HL19PB6-15	55-30-00-05	-092	02
HL18PB8-14	57-10-02-01	-513	01	HL19PB6-15	57-10-02-06	-229	AR
HL18PB8-15	57-80-00-01	-014	08	HL19PB6-16	57-10-02-06	-230	AR
HL18PB8-17	57-10-02-01	-413	02	HL19PB6-4	57-10-02-06	-150	AR
HL18PB8-17	57-10-02-01	-454	01	HL19PB6-5	57-10-02-06	-152	AR
HL18PB8-17	57-10-02-06	-097	AR	HL19PB6-6	55-30-00-01	-009	04
HL18PB8-18	57-10-02-01	-455	01	HL19PB6-6	57-10-02-01	-090	01
HL18PB8-19	57-10-02-01	-472	02	HL19PB6-6	57-10-02-06	-151	AR
HL18PB8-8	57-10-02-01	-406	01	HL19PB6-7	55-30-00-08	-004	07
HL18PB8-8	57-10-02-06	-092	AR	HL19PB6-7	57-10-02-06	-153	AR
HL18PB8-9	57-10-02-01	-420	01	HL19PB6-7	57-10-02-06	-154	AR
HL197DU-6	57-20-00-08	-119	02	HL19PB6-8	55-30-00-01	-010	04
HL197DU-6	57-20-00-08	-227	04	HL19PB6-8	55-30-00-08	-005	05
HL19PB10-18	57-10-02-01	-416	02	HL19PB6-8	55-30-00-08	-006	04
HL19PB10-18	57-10-02-01	-456	03	HL19PB6-8	57-10-02-06	-155	AR
HL19PB10-19	57-10-02-01	-457	01	HL19PB6-9	55-30-00-08	-007	07
HL19PB10-20	57-10-02-01	-473	02	HL19PB6-9	57-10-02-01	-091	02
HL19PB10-21	57-10-02-01	-474	02	HL19PB8-10	57-10-02-06	-087	AR
HL19PB10-21	57-10-02-01	-489	04	HL19PB8-10	57-10-02-06	-164	AR
HL19PB10-21	57-10-02-06	-245	AR	HL19PB8-11	57-10-02-06	-165	AR
HL19PB10-22	57-10-02-01	-530	02	HL19PB8-11	57-10-02-06	-232	AR
HL19PB10-22	57-10-02-06	-246	AR	HL19PB8-12	57-10-02-06	-078	AR
HL19PB10-23	57-10-02-01	-503	02	HL19PB8-12	57-10-02-06	-166	AR
HL19PB12-23	57-10-02-01	-504	02	HL19PB8-12	57-10-02-06	-233	AR
HL19PB12-23	57-10-02-01	-531	02	HL19PB8-13	57-10-02-06	-167	AR
HL19PB5-10	55-30-00-05	-153	02	HL19PB8-13	57-10-02-06	-234	AR
HL19PB5-10	55-30-00-05	-162	02	HL19PB8-14	57-10-02-06	-089	AR
HL19PB5-11	55-30-00-05	-078	02	HL19PB8-14	57-10-02-06	-235	AR
HL19PB5-11	55-30-00-05	-087	02	HL19PB8-15	57-10-02-01	-401	03
HL19PB5-14	55-30-00-02	-164	04	HL19PB8-15	57-10-02-06	-168	AR
HL19PB5-14	55-30-00-05	-154	02	HL19PB8-15	57-10-02-06	-236	AR
HL19PB5-14	55-30-00-05	-163	02	HL19PB8-16	57-10-02-01	-402	01
HL19PB5-15	55-30-00-05	-079	02	HL19PB8-16	57-10-02-06	-237	AR
HL19PB5-15	55-30-00-05	-088	02	HL19PB8-17	57-10-02-01	-414	01
HL19PB5-2	33-40-50-01	-005	06	HL19PB8-17	57-10-02-06	-238	AR
HL19PB5-3	57-20-00-06	-008	04	HL19PB8-18	57-10-02-01	-415	01

© Cessna Aircraft Company

PART NUMBER	CH SEC SUBJ FIG	ITEM	REQ
HL19PB8-18	57-10-02-06	-239	AR
HL19PB8-19	57-10-02-06	-240	AR
HL19PB8-20	57-10-02-06	-169	AR
HL19PB8-20	57-10-02-06	-241	AR
HL19PB8-21	57-10-02-06	-242	AR
HL19PB8-22	57-10-02-06	-243	AR
HL19PB8-6	57-10-02-06	-161	AR
HL19PB8-7	57-10-02-06	-086	AR
HL19PB8-8	57-10-02-06	-162	AR
HL19PB8-9	57-10-02-06	-163	AR
HL20PB10-13	57-10-02-01	-571	06
HL20PB10-20	57-10-02-01	-377	01
HL20PB10-20	57-80-00-01	-037	01
HL20PB10-21	57-10-02-01	-378	01
HL20PB10-21	57-80-00-01	-038	01
HL20PB10-22	57-10-02-01	-379	01
HL20PB10-22	57-80-00-01	-039	01
HL20PB10-24	57-10-02-01	-380	03
HL20PB10-24	57-80-00-01	-040	03
HL20PB10-26	57-10-02-01	-011	04
HL20PB10-26	57-80-00-01	-104	04
HL20PB5-10	55-30-00-02	-193	08
HL20PB5-10	57-10-02-01	-230	02
HL20PB5-12	57-10-02-01	-234	06
HL20PB5-13	57-10-02-01	-238	08
HL20PB5-16	57-10-02-01	-239	08
HL20PB5-3	57-10-02-01	-080	20
HL20PB5-4	57-10-02-01	-078	23
HL20PB5-5	55-30-00-02	-079	04
HL20PB5-6	55-30-00-02	-078	02
HL20PB5-6	57-10-02-01	-079	06
HL20PB5-7	55-30-00-02	-192	08
HL20PB5-7	57-10-02-01	-077	04
HL20PB5-8	55-30-00-08	-017	02
HL20PB5-9	55-30-00-02	-077	02
HL20PB6-10	57-10-02-01	-031	08
HL20PB6-10	57-80-00-01	-098	04
HL20PB6-11	57-10-02-01	-030	11
HL20PB6-11	57-80-00-01	-095	06
HL20PB6-11	57-80-00-01	-096	05
HL20PB6-12	57-10-02-01	-033	01
HL20PB6-12	57-10-02-06	-079	AR
HL20PB6-12	57-10-02-06	-248	AR
HL20PB6-12	57-80-00-01	-097	01
HL20PB6-13	57-10-02-06	-249	AR
HL20PB6-14	57-10-02-01	-244	02
HL20PB6-14	57-80-00-01	-019	02
HL20PB6-15	57-10-02-06	-250	AR
HL20PB6-15	57-80-00-01	-020	04
HL20PB6-16	57-10-02-06	-251	AR
HL20PB6-17	57-10-02-01	-189	02
HL20PB6-17	57-10-02-06	-252	AR
HL20PB6-18	57-10-02-01	-190	02
HL20PB6-18	57-10-02-06	-253	AR
HL20PB6-19	57-10-02-06	-254	AR
HL20PB6-20	57-10-02-06	-255	AR
HL20PB6-21	57-10-02-06	-256	AR
HL20PB6-6	57-10-02-01	-034	02
HL20PB6-7	57-10-02-01	-081	04
HL20PB6-8	57-10-02-01	-032	04
HL20PB6-8	57-80-00-01	-099	01
HL20PB8-12	57-10-02-06	-080	AR

PART NUMBER	CH SEC SUBJ FIG	ITEM	REQ
HL20PB8-18	57-10-02-01	-191	02
HL20PB8-20	57-10-02-01	-487	02
HL20PB8-21	57-10-02-01	-188	02
HL20PB8-22	57-10-02-01	-501	02
HL20PB8-22	57-10-02-01	-528	02
HL21PB8-18	57-10-02-01	-192	02
HL241-6-7	57-20-00-08	-113	02
HL241-6-8	57-20-00-08	-226	04
HL40-4-2	54-50-00-01	-090	14
HL40-4-3	54-50-00-01	-123	04
HL40-4-4	55-30-00-02	-158	04
HL40-4-6	55-30-00-02	-166	12
HL40-5-10	53-60-01-08	-307	04
HL40-5-10	53-60-01-08	-314	04
HL40-5-3	54-50-00-01	-122	46
HL40-5-3	57-21-00-01	-016	01
HL40-5-3	57-21-00-01	-025	06
HL40-5-4	54-50-00-01	-124	04
HL40-5-5	57-20-05-01	-100	02
HL40-5-6	57-20-05-01	-101	02
HL40-5-8	53-60-01-08	-240	02
HL40-5-8	53-60-01-08	-313	04
HL40-5-8	53-60-05-03	-005	AR
HL40-5-9	53-60-01-08	-241	02
HL40-5-9	53-60-05-03	-007	AR
HL40-6-3	54-50-00-01	-104	14
HL40PY4-3	57-60-00-02	-029	AR
HL40PY4-6	57-60-00-02	-028	AR
HL40PY5-2	53-20-02-03	-010	02
HL40PY5-3	53-20-02-03	-005	06
HL40PY5-3	53-20-02-03	-011	02
HL40PY5-3	57-20-00-06	-009	66
HL40PY5-5	57-20-00-06	-010	02
HL41-4-8	27-10-50-01	-050	01
HL41-5-4	33-40-17-01	-006	04
HL41-5-4	71-10-00-01	-169	07
HL41-5-4	71-10-00-01	-241	46
HL41-5-8	27-10-50-01	-036	02
HL41-5-8	52-80-00-01	-010	02
HL41-5-8	52-80-00-01	-022	03
HL41-5-8	53-38-00-01	-030	02
HL41-5-8	53-60-01-08	-082	08
HL41-5-8	53-60-01-08	-097	08
HL41-5-8	53-60-05-03	-006	AR
HL41-6-12	52-80-00-01	-014	03
HL41-6-12	52-80-00-01	-018	05
HL41-6-12	52-80-00-01	-026	12
HL48-12-19	57-21-01-01	-017	02
HL48-20-25	57-21-01-01	-015	02
HL49-6-10	57-10-02-06	-082	AR
HL49-6-11	57-10-02-01	-089	02
HL49-6-7	57-10-02-06	-075	AR
HL49-6-8	57-10-02-01	-088	01
HL49-6-8	57-10-02-06	-076	AR
HL49-6-9	57-10-02-06	-077	AR
HL49-8-10	57-10-02-06	-083	AR
HL49-8-12	57-10-02-06	-084	AR
HL49-8-16	57-10-02-06	-085	AR
HL70-10	28-11-55-01	-009	04
HL70-10	57-10-02-01	-423	01
HL70-10	57-10-02-01	-480	01
HL70-10	57-10-02-01	-494	01

© Cessna Aircraft Company

PART NUMBER	CH SEC SUBJ FIG	ITEM	REQ	PART NUMBER	CH SEC SUBJ FIG	ITEM	REQ
HL70-10	57-10-02-01	-515	AR	HL70-5	53-20-02-03	-006	06
HL70-10	57-10-02-01	-537	02	HL70-5	53-20-02-03	-012	04
HL70-10	57-20-01-04	-014	08	HL70-5	53-20-03-04	-006	08
HL70-12	53-45-00-01	-007	04	HL70-5	53-21-00-01	-003	AR
HL70-5	22-10-10-01	-011	04	HL70-5	53-21-00-01	-007	AR
HL70-5	25-70-00-01	-023	01	HL70-5	53-21-00-01	-042	AR
HL70-5	27-10-15-01	-091	04	HL70-5	53-21-00-01	-049	AR
HL70-5	27-10-15-01	-098	04	HL70-5	53-21-00-01	-085	AR
HL70-5	27-10-15-01	-108	02	HL70-5	53-21-00-01	-088	AR
HL70-5	27-10-15-01	-120	02	HL70-5	53-21-00-01	-091	AR
HL70-5	27-10-15-01	-128	02	HL70-5	53-21-00-01	-096	AR
HL70-5	27-10-30-01	-168	02	HL70-5	53-21-00-01	-101	AR
HL70-5	27-10-30-01	-171	02	HL70-5	53-21-00-01	-125	AR
HL70-5	27-10-30-01	-460	05	HL70-5	53-21-00-01	-156	AR
HL70-5	27-10-30-01	-477	04	HL70-5	53-21-00-01	-164	AR
HL70-5	27-10-30-01	-529	06	HL70-5	53-21-00-01	-170	AR
HL70-5	27-10-50-02	-004	10	HL70-5	53-21-00-02	-005	AR
HL70-5	27-10-50-02	-008	03	HL70-5	53-21-00-02	-008	AR
HL70-5	27-10-50-02	-014	05	HL70-5	53-21-00-02	-013	AR
HL70-5	27-10-50-02	-023	08	HL70-5	53-21-00-02	-018	AR
HL70-5	27-10-50-02	-099	17	HL70-5	53-21-00-02	-024	AR
HL70-5	27-10-50-02	-104	03	HL70-5	53-21-00-02	-027	AR
HL70-5	27-10-50-02	-109	04	HL70-5	53-21-00-02	-078	AR
HL70-5	27-10-50-02	-152	14	HL70-5	53-21-00-02	-085	AR
HL70-5	27-10-50-02	-167	04	HL70-5	53-21-00-02	-089	AR
HL70-5	27-10-50-02	-182	06	HL70-5	53-21-00-02	-092	AR
HL70-5	27-13-05-01	-108	06	HL70-5	53-22-00-01	-014	24
HL70-5	27-25-00-01	-020	02	HL70-5	53-22-00-01	-085	28
HL70-5	27-60-40-01	-014	08	HL70-5	53-22-00-02	-010	28
HL70-5	27-60-40-01	-018	06	HL70-5	53-22-00-02	-084	28
HL70-5	27-60-40-01	-023	06	HL70-5	53-22-00-03	-014	28
HL70-5	28-20-00-03	-005	04	HL70-5	53-22-00-03	-085	28
HL70-5	28-20-00-03	-259	05	HL70-5	53-22-00-04	-012	28
HL70-5	30-10-00-02	-030	04	HL70-5	53-22-00-04	-083	28
HL70-5	33-40-15-01	-006	03	HL70-5	53-22-00-05	-009	28
HL70-5	33-40-15-01	-017	04	HL70-5	53-22-00-05	-090	15
HL70-5	52-10-00-01	-014	04	HL70-5	53-22-00-05	-161	04
HL70-5	52-10-00-01	-028	52	HL70-5	53-22-00-05	-169	06
HL70-5	52-10-11-01	-187	06	HL70-5	53-22-00-06	-004B	15
HL70-5	52-10-21-01	-096	12	HL70-5	53-22-00-06	-022	02
HL70-5	52-10-22-02	-269	04	HL70-5	53-22-00-07	-022	07
HL70-5	52-30-00-01	-016	04	HL70-5	53-22-00-07	-092	07
HL70-5	53-12-00-02	-023	21	HL70-5	53-22-00-07	-168	07
HL70-5	53-12-15-01	-029	52	HL70-5	53-22-00-08	-019	07
HL70-5	53-15-00-01	-007	02	HL70-5	53-22-00-08	-095	07
HL70-5	53-15-00-02	-008	06	HL70-5	53-22-00-09	-004	AR
HL70-5	53-15-00-02	-155	06	HL70-5	53-22-00-09	-009	AR
HL70-5	53-20-00-04	-025	12	HL70-5	53-22-00-09	-017	09
HL70-5	53-20-00-04	-033	12	HL70-5	53-22-00-09	-031	10
HL70-5	53-20-00-05	-024	12	HL70-5	53-22-00-09	-158	104
HL70-5	53-20-00-05	-032	12	HL70-5	53-22-00-09	-170	36
HL70-5	53-20-00-06	-015	12	HL70-5	53-22-00-09	-176	36
HL70-5	53-20-00-06	-022	12	HL70-5	53-22-00-10	-004	AR
HL70-5	53-20-00-06	-102	04	HL70-5	53-22-00-10	-009	AR
HL70-5	53-20-00-06	-107	04	HL70-5	53-22-00-10	-083	12
HL70-5	53-20-00-06	-125	04	HL70-5	53-22-00-10	-095	06
HL70-5	53-20-00-07	-020	12	HL70-5	53-22-00-10	-097	02
HL70-5	53-20-00-07	-028	12	HL70-5	53-22-00-10	-120	18
HL70-5	53-20-00-08	-023	24	HL70-5	53-22-00-18	-014	28
HL70-5	53-20-00-09	-008	10	HL70-5	53-22-00-19	-015	28
HL70-5	53-20-00-09	-022	12	HL70-5	53-23-00-03	-019	22
HL70-5	53-20-00-12	-035	14	HL70-5	53-24-00-01	-008	06

© Cessna Aircraft Company

PART NUMBER	CH SEC SUBJ FIG	ITEM	REQ	PART NUMBER	CH SEC SUBJ FIG	ITEM	REQ
HL70-5	53-24-00-01	-015	08	HL70-5	53-30-06-03	-251	03
HL70-5	53-24-00-01	-026	14	HL70-5	53-30-06-03	-255	04
HL70-5	53-24-00-01	-032	10	HL70-5	53-30-06-03	-260	04
HL70-5	53-24-00-01	-035	02	HL70-5	53-30-06-03	-262	02
HL70-5	53-24-00-01	-079	15	HL70-5	53-30-06-03	-267	10
HL70-5	53-24-00-01	-091	04	HL70-5	53-30-06-04	-009	02
HL70-5	53-24-00-01	-161	10	HL70-5	53-30-06-04	-014	10
HL70-5	53-24-00-01	-167	04	HL70-5	53-30-06-04	-018	03
HL70-5	53-24-00-01	-175	08	HL70-5	53-30-06-04	-021	03
HL70-5	53-24-00-01	-238	03	HL70-5	53-30-06-04	-025	06
HL70-5	53-24-00-01	-247	08	HL70-5	53-30-06-04	-030	06
HL70-5	53-24-00-01	-270	AR	HL70-5	53-30-06-04	-034	02
HL70-5	53-24-00-01	-286	AR	HL70-5	53-30-06-04	-080	06
HL70-5	53-30-06-01	-008	AR	HL70-5	53-30-06-04	-084	04
HL70-5	53-30-06-01	-020	AR	HL70-5	53-30-06-04	-091	07
HL70-5	53-30-06-01	-027	AR	HL70-5	53-30-06-04	-096	10
HL70-5	53-30-06-01	-040	AR	HL70-5	53-30-06-04	-153	06
HL70-5	53-30-06-01	-084	AR	HL70-5	53-30-06-04	-160	07
HL70-5	53-30-06-01	-089	AR	HL70-5	53-30-06-04	-164	16
HL70-5	53-30-06-01	-093	AR	HL70-5	53-30-06-04	-168	15
HL70-5	53-30-06-01	-102	AR	HL70-5	53-30-06-04	-175	08
HL70-5	53-30-06-01	-157	AR	HL70-5	53-30-06-04	-180	06
HL70-5	53-30-06-01	-168	AR	HL70-5	53-30-06-04	-185	07
HL70-5	53-30-06-01	-178	AR	HL70-5	53-30-06-04	-190	10
HL70-5	53-30-06-02	-006	AR	HL70-5	53-30-06-04	-229	07
HL70-5	53-30-06-02	-017	AR	HL70-5	53-30-06-04	-233	04
HL70-5	53-30-06-02	-024	AR	HL70-5	53-30-06-04	-238	04
HL70-5	53-30-06-02	-029	AR	HL70-5	53-30-06-04	-242	06
HL70-5	53-30-06-02	-039	AR	HL70-5	53-30-06-04	-245	03
HL70-5	53-30-06-02	-079	AR	HL70-5	53-30-06-04	-250	04
HL70-5	53-30-06-02	-091	AR	HL70-5	53-30-06-04	-255	10
HL70-5	53-30-06-02	-109	AR	HL70-5	53-30-06-04	-260	10
HL70-5	53-30-06-02	-154	AR	HL70-5	53-30-06-04	-262	02
HL70-5	53-30-06-02	-158	AR	HL70-5	53-38-00-01	-031	08
HL70-5	53-30-06-02	-163	AR	HL70-5	53-40-00-02	-036	08
HL70-5	53-30-06-02	-166	AR	HL70-5	53-42-03-01	-009	02
HL70-5	53-30-06-03	-011	04	HL70-5	53-42-03-01	-030	03
HL70-5	53-30-06-03	-014	03	HL70-5	53-42-03-01	-038	03
HL70-5	53-30-06-03	-018	06	HL70-5	53-42-03-01	-090	05
HL70-5	53-30-06-03	-023	10	HL70-5	53-42-03-01	-097	04
HL70-5	53-30-06-03	-031	06	HL70-5	53-42-03-01	-104	03
HL70-5	53-30-06-03	-036	06	HL70-5	53-42-04-03	-015	06
HL70-5	53-30-06-03	-040	06	HL70-5	53-42-04-04	-027	28
HL70-5	53-30-06-03	-043	02	HL70-5	53-43-00-01	-007	02
HL70-5	53-30-06-03	-047	03	HL70-5	53-45-00-01	-009	24
HL70-5	53-30-06-03	-078	02	HL70-5	53-60-00-05	-010	16
HL70-5	53-30-06-03	-082	04	HL70-5	53-60-00-05	-014	12
HL70-5	53-30-06-03	-087	06	HL70-5	53-60-00-06	-005	12
HL70-5	53-30-06-03	-092	10	HL70-5	53-60-00-06	-016	08
HL70-5	53-30-06-03	-095	02	HL70-5	53-60-00-06	-030	01
HL70-5	53-30-06-03	-101	05	HL70-5	53-60-00-07	-010	66
HL70-5	53-30-06-03	-106	08	HL70-5	53-60-00-07	-087	66
HL70-5	53-30-06-03	-156	08	HL70-5	53-60-00-07	-100	66
HL70-5	53-30-06-03	-162	10	HL70-5	53-60-00-07	-158	17
HL70-5	53-30-06-03	-166	06	HL70-5	53-60-00-07	-172	17
HL70-5	53-30-06-03	-171	07	HL70-5	53-60-00-07	-234	17
HL70-5	53-30-06-03	-229	02	HL70-5	53-60-00-07	-243	02
HL70-5	53-30-06-03	-233	03	HL70-5	53-60-00-07	-255	20
HL70-5	53-30-06-03	-237	05	HL70-5	53-60-00-07	-311	34
HL70-5	53-30-06-03	-241	05	HL70-5	53-60-00-07	-329	84
HL70-5	53-30-06-03	-244	03	HL70-5	53-60-00-07	-387	84
HL70-5	53-30-06-03	-248	03	HL70-5	53-60-00-07	-400	84

© Cessna Aircraft Company

PART NUMBER	CH SEC SUBJ FIG	ITEM	REQ
HL70-5	53-60-01-01	-008	03
HL70-5	53-60-01-02	-008	03
HL70-5	53-60-01-03	-009	03
HL70-5	53-60-01-04	-012	03
HL70-5	53-60-01-05	-088	03
HL70-5	53-60-01-05	-097	03
HL70-5	53-60-01-07	-041	AR
HL70-5	53-60-01-07	-083	AR
HL70-5	53-60-01-07	-103	AR
HL70-5	53-60-01-08	-008	AR
HL70-5	53-60-01-08	-017	22
HL70-5	53-60-01-08	-083	08
HL70-5	53-60-01-08	-087	48
HL70-5	53-60-01-08	-089	03
HL70-5	53-60-01-08	-098	08
HL70-5	53-60-01-08	-102	46
HL70-5	53-60-01-08	-104	03
HL70-5	53-60-01-08	-155	14
HL70-5	53-60-01-08	-159	14
HL70-5	53-60-01-08	-166	14
HL70-5	53-60-01-08	-230	14
HL70-5	53-60-01-08	-237	14
HL70-5	53-60-01-08	-243	10
HL70-5	53-60-01-08	-308	90
HL70-5	53-60-01-08	-321	53
HL70-5	53-60-01-10	-017	06
HL70-5	53-60-01-10	-024	41
HL70-5	53-60-01-10	-031	10
HL70-5	53-60-01-10	-037	05
HL70-5	53-60-01-10	-050	12
HL70-5	53-60-01-10	-091	06
HL70-5	53-60-01-10	-099	42
HL70-5	53-60-01-10	-109	10
HL70-5	53-60-01-10	-115	05
HL70-5	53-60-01-10	-124	10
HL70-5	53-60-01-11	-006	02
HL70-5	53-60-01-11	-040	04
HL70-5	53-60-01-11	-044	01
HL70-5	53-60-01-12	-003	16
HL70-5	53-60-01-13	-019	12
HL70-5	53-60-01-13	-040	21
HL70-5	53-60-01-13	-047	08
HL70-5	53-60-02-01	-011	AR
HL70-5	53-60-02-01	-014	AR
HL70-5	53-60-02-01	-029	20
HL70-5	53-60-02-02	-008	132
HL70-5	53-60-02-02	-015	34
HL70-5	53-60-02-03	-007	108
HL70-5	53-60-02-03	-014	16
HL70-5	53-60-02-04	-005	02
HL70-5	53-60-02-04	-013	02
HL70-5	53-60-03-01	-040	16
HL70-5	53-60-03-02	-020	06
HL70-5	53-60-03-02	-027	04
HL70-5	53-60-03-02	-039	09
HL70-5	53-60-03-02	-043	06
HL70-5	53-60-04-01	-006	02
HL70-5	53-60-04-01	-013	04
HL70-5	53-60-05-02	-010	04
HL70-5	53-60-05-02	-081	02
HL70-5	53-60-05-02	-095	06
HL70-5	53-60-05-02	-101	09
HL70-5	53-60-05-02	-107	06
HL70-5	53-60-05-03	-008	AR
HL70-5	55-10-00-01	-167	11
HL70-5	55-10-00-01	-173	05
HL70-5	55-10-00-02	-003	13
HL70-5	55-10-00-02	-010	24
HL70-5	55-20-00-01	-036	04
HL70-5	55-30-00-01	-011	04
HL70-5	55-30-00-02	-011	25
HL70-5	55-30-00-02	-023	02
HL70-5	55-30-00-02	-081	30
HL70-5	55-30-00-02	-092	54
HL70-5	55-30-00-02	-162	04
HL70-5	55-30-00-02	-179	04
HL70-5	55-30-00-02	-228	02
HL70-5	55-30-00-02	-237	02
HL70-5	55-30-00-04	-003	02
HL70-5	55-30-00-04	-009	02
HL70-5	55-30-00-04	-024	02
HL70-5	55-30-00-04	-077	02
HL70-5	55-30-00-04	-109	04
HL70-5	55-30-00-04	-111	10
HL70-5	55-30-00-04	-152	02
HL70-5	55-30-00-04	-169	02
HL70-5	55-30-00-04	-177	02
HL70-5	55-30-00-04	-238	22
HL70-5	55-30-00-04	-263	02
HL70-5	55-30-00-05	-005	06
HL70-5	55-30-00-05	-024	12
HL70-5	55-30-00-05	-080	14
HL70-5	55-30-00-05	-090	08
HL70-5	55-30-00-05	-097	06
HL70-5	55-30-00-05	-105	10
HL70-5	55-30-00-05	-155	14
HL70-5	55-30-00-05	-164	08
HL70-5	55-30-00-05	-172	06
HL70-5	55-30-00-05	-182	14
HL70-5	55-30-00-06	-009	AR
HL70-5	55-30-00-07	-006	14
HL70-5	55-30-00-07	-016	26
HL70-5	55-30-00-07	-021	04
HL70-5	55-30-00-08	-003	AR
HL70-5	55-30-00-08	-018	02
HL70-5	55-30-00-08	-086	08
HL70-5	55-30-00-08	-104	68
HL70-5	56-15-00-01	-091	02
HL70-5	57-10-00-01	-006	01
HL70-5	57-10-00-01	-012	04
HL70-5	57-10-00-01	-017	06
HL70-5	57-10-00-01	-037	04
HL70-5	57-10-02-01	-175	AR
HL70-5	57-10-02-01	-249	04
HL70-5	57-10-02-01	-261	02
HL70-5	57-10-02-01	-268	04
HL70-5	57-10-02-01	-277	10
HL70-5	57-10-02-01	-466	09
HL70-5	57-10-02-01	-514	AR
HL70-5	57-10-02-03	-009	96
HL70-5	57-10-02-03	-016	AR
HL70-5	57-10-02-03	-020	04
HL70-5	57-10-02-03	-027	06
HL70-5	57-10-02-03	-031	06

© Cessna Aircraft Company

PART NUMBER	CH SEC SUBJ FIG	ITEM	REQ	PART NUMBER	CH SEC SUBJ FIG	ITEM	REQ
HL70-5	57-10-02-03	-036	06	HL70-5	57-20-00-08	-102	15
HL70-5	57-10-02-03	-040	06	HL70-5	57-20-00-08	-108	14
HL70-5	57-10-02-03	-045	06	HL70-5	57-20-00-08	-121	02
HL70-5	57-10-02-04	-009	37	HL70-5	57-20-00-08	-164	08
HL70-5	57-10-02-04	-014	08	HL70-5	57-20-00-08	-171	06
HL70-5	57-10-02-04	-018	17	HL70-5	57-20-00-08	-178	02
HL70-5	57-10-02-04	-020	05	HL70-5	57-20-00-08	-186	12
HL70-5	57-10-02-04	-028	20	HL70-5	57-20-00-08	-302	02
HL70-5	57-10-02-04	-034	16	HL70-5	57-20-00-08	-317	06
HL70-5	57-10-02-04	-038	12	HL70-5	57-20-00-08	-332	36
HL70-5	57-10-02-04	-041	18	HL70-5	57-20-01-01	-006	06
HL70-5	57-10-02-04	-083	13	HL70-5	57-20-01-01	-011	04
HL70-5	57-10-02-04	-090	16	HL70-5	57-20-01-01	-016	04
HL70-5	57-10-02-04	-094	11	HL70-5	57-20-01-01	-021	04
HL70-5	57-10-02-04	-101	18	HL70-5	57-20-01-01	-026	04
HL70-5	57-10-02-04	-109	19	HL70-5	57-20-01-01	-031	04
HL70-5	57-10-02-04	-112	12	HL70-5	57-20-01-01	-080	51
HL70-5	57-10-02-05	-006	04	HL70-5	57-20-01-01	-085	04
HL70-5	57-10-02-05	-011	03	HL70-5	57-20-01-01	-090	04
HL70-5	57-10-02-05	-019	04	HL70-5	57-20-01-01	-095	04
HL70-5	57-10-02-05	-029	AR	HL70-5	57-20-01-01	-100	04
HL70-5	57-10-02-05	-042	AR	HL70-5	57-20-01-01	-105	04
HL70-5	57-10-02-05	-080	AR	HL70-5	57-20-01-01	-110	04
HL70-5	57-10-02-05	-084	04	HL70-5	57-20-01-02	-008	68
HL70-5	57-10-02-05	-091	AR	HL70-5	57-20-01-02	-014	20
HL70-5	57-10-02-05	-155	04	HL70-5	57-20-01-02	-019	04
HL70-5	57-10-02-05	-170	04	HL70-5	57-20-01-02	-025	08
HL70-5	57-10-02-05	-175	06	HL70-5	57-20-01-02	-032	08
HL70-5	57-10-02-05	-182	AR	HL70-5	57-20-01-02	-091	83
HL70-5	57-10-02-07	-005	26	HL70-5	57-20-01-02	-096	04
HL70-5	57-10-02-07	-011	26	HL70-5	57-20-01-02	-101	04
HL70-5	57-10-02-07	-014	04	HL70-5	57-20-01-02	-107	08
HL70-5	57-10-02-07	-023	07	HL70-5	57-20-01-02	-115	08
HL70-5	57-10-02-07	-027	06	HL70-5	57-20-01-02	-121	04
HL70-5	57-10-02-07	-031	08	HL70-5	57-20-01-03	-017	03
HL70-5	57-10-02-07	-035	08	HL70-5	57-20-01-05	-011	12
HL70-5	57-10-02-07	-039	04	HL70-5	57-20-01-05	-016	20
HL70-5	57-10-02-07	-044	08	HL70-5	57-20-01-05	-019	08
HL70-5	57-10-02-08	-008	24	HL70-5	57-20-01-06	-016	08
HL70-5	57-10-02-08	-011	08	HL70-5	57-20-01-06	-024	18
HL70-5	57-10-02-08	-015	08	HL70-5	57-20-01-06	-082	22
HL70-5	57-10-02-08	-019	08	HL70-5	57-20-01-06	-091	14
HL70-5	57-10-02-08	-023	04	HL70-5	57-20-01-06	-102	08
HL70-5	57-10-02-08	-028	04	HL70-5	57-20-01-07	-009	08
HL70-5	57-10-02-08	-036	04	HL70-5	57-20-01-07	-017	18
HL70-5	57-10-02-08	-040	04	HL70-5	57-20-01-07	-089	14
HL70-5	57-10-02-08	-048	08	HL70-5	57-20-01-07	-097	08
HL70-5	57-20-00-01	-034	04	HL70-5	57-20-01-08	-004	02
HL70-5	57-20-00-03	-006	06	HL70-5	57-20-01-08	-010	08
HL70-5	57-20-00-03	-020	AR	HL70-5	57-20-01-08	-017	20
HL70-5	57-20-00-04	-111	74	HL70-5	57-20-01-08	-082	06
HL70-5	57-20-00-05	-037	26	HL70-5	57-20-01-08	-089	14
HL70-5	57-20-00-06	-011	AR	HL70-5	57-20-01-08	-097	08
HL70-5	57-20-00-07	-054	01	HL70-5	57-20-01-09	-005	03
HL70-5	57-20-00-07	-093	32	HL70-5	57-20-01-09	-011	18
HL70-5	57-20-00-08	-004	08	HL70-5	57-20-01-09	-019	10
HL70-5	57-20-00-08	-013	06	HL70-5	57-20-01-09	-081	30
HL70-5	57-20-00-08	-029	01	HL70-5	57-20-01-09	-091	10
HL70-5	57-20-00-08	-039	06	HL70-5	57-20-01-09	-098	06
HL70-5	57-20-00-08	-081	04	HL70-5	57-20-01-10	-010	01
HL70-5	57-20-00-08	-088	06	HL70-5	57-20-01-10	-014	01
HL70-5	57-20-00-08	-094	02	HL70-5	57-20-01-10	-020	12

© Cessna Aircraft Company

PART NUMBER	CH SEC SUBJ FIG	ITEM	REQ
HL70-5	57-20-01-10	-025	16
HL70-5	57-20-01-10	-081	18
HL70-5	57-20-01-10	-087	12
HL70-5	57-20-01-10	-093	08
HL70-5	57-20-01-11	-014	01
HL70-5	57-20-01-11	-021	14
HL70-5	57-20-01-11	-029	08
HL70-5	57-20-01-11	-082	10
HL70-5	57-20-01-11	-089	06
HL70-5	57-20-01-11	-095	08
HL70-5	57-20-01-11	-100	02
HL70-5	57-20-01-12	-012	12
HL70-5	57-20-01-12	-015	16
HL70-5	57-20-01-12	-081	04
HL70-5	57-20-01-12	-087	08
HL70-5	57-20-01-12	-092	04
HL70-5	57-20-01-12	-096	04
HL70-5	57-20-01-13	-013	02
HL70-5	57-20-01-13	-017	01
HL70-5	57-20-01-13	-022	04
HL70-5	57-20-01-13	-027	16
HL70-5	57-20-01-13	-034	08
HL70-5	57-20-01-13	-080	06
HL70-5	57-20-01-13	-085	08
HL70-5	57-20-01-13	-089	04
HL70-5	57-20-01-14	-010	04
HL70-5	57-20-01-14	-014	04
HL70-5	57-20-01-14	-018	02
HL70-5	57-20-01-14	-022	02
HL70-5	57-20-01-14	-081	12
HL70-5	57-20-01-14	-087	04
HL70-5	57-20-01-14	-094	08
HL70-5	57-20-01-15	-008	11
HL70-5	57-20-01-15	-015	04
HL70-5	57-20-01-15	-019	02
HL70-5	57-20-01-15	-024	02
HL70-5	57-20-01-15	-029	02
HL70-5	57-20-01-15	-033	04
HL70-5	57-20-01-15	-037	04
HL70-5	57-20-01-15	-042	04
HL70-5	57-20-01-16	-010	04
HL70-5	57-20-01-16	-014	04
HL70-5	57-20-01-16	-018	02
HL70-5	57-20-01-16	-023	04
HL70-5	57-20-01-17	-011	04
HL70-5	57-20-01-17	-014	02
HL70-5	57-20-01-17	-018	04
HL70-5	57-20-01-17	-029	04
HL70-5	57-20-01-17	-033	02
HL70-5	57-20-01-17	-037	02
HL70-5	57-20-01-18	-018	02
HL70-5	57-20-01-18	-034	02
HL70-5	57-20-01-19	-025	03
HL70-5	57-20-05-01	-004	01
HL70-5	57-20-05-01	-007	01
HL70-5	57-20-05-01	-017	01
HL70-5	57-20-05-01	-020	01
HL70-5	57-20-05-01	-026	04
HL70-5	57-20-05-01	-029	01
HL70-5	57-20-05-01	-035	04
HL70-5	57-20-05-01	-038	01
HL70-5	57-20-05-01	-079	04
HL70-5	57-20-05-01	-082	02
HL70-5	57-20-05-01	-092	02
HL70-5	57-20-05-01	-095	02
HL70-5	57-20-05-01	-102	04
HL70-5	57-21-00-01	-012	01
HL70-5	57-21-00-01	-021	01
HL70-5	57-21-01-01	-006	15
HL70-5	57-21-01-01	-008	05
HL70-5	57-21-01-01	-029	20
HL70-5	57-21-01-01	-079	08
HL70-5	57-21-01-01	-082	10
HL70-5	57-21-01-01	-085	02
HL70-5	57-21-01-01	-092	04
HL70-5	57-40-10-01	-005	40
HL70-5	57-50-00-01	-013	08
HL70-5	57-50-00-01	-047	52
HL70-5	57-60-00-01	-029	04
HL70-5	57-60-00-01	-107	16
HL70-5	57-70-00-02	-088	03
HL70-5	57-70-00-02	-092	03
HL70-5	57-70-00-02	-098	03
HL70-5	57-70-00-02	-102	03
HL70-5	57-80-00-01	-087	06
HL70-5	71-10-00-01	-170	07
HL70-5	71-10-00-01	-243	46
HL70-6	27-25-00-01	-012	03
HL70-6	53-10-10-02	-004	03
HL70-6	53-10-10-02	-009	06
HL70-6	53-10-10-02	-016	03
HL70-6	53-10-10-02	-021	06
HL70-6	53-10-10-02	-081	05
HL70-6	53-10-10-02	-092	05
HL70-6	53-22-00-09	-021	08
HL70-6	53-22-00-09	-035	06
HL70-6	53-22-00-10	-086	08
HL70-6	53-24-00-01	-162	06
HL70-6	53-24-00-01	-168	04
HL70-6	53-60-01-01	-036	05
HL70-6	53-60-01-02	-032	04
HL70-6	53-60-01-03	-039	05
HL70-6	53-60-01-05	-039	10
HL70-6	53-60-01-06	-010	10
HL70-6	53-60-01-07	-084	AR
HL70-6	53-60-01-08	-245	14
HL70-6	53-60-01-10	-026	02
HL70-6	53-60-01-10	-053	04
HL70-6	53-60-01-10	-101	02
HL70-6	53-60-01-10	-126	02
HL70-6	55-10-00-01	-105	26
HL70-6	55-10-00-01	-169	05
HL70-6	55-30-00-01	-013	08
HL70-6	55-30-00-02	-012	22
HL70-6	55-30-00-02	-024	06
HL70-6	55-30-00-05	-084	08
HL70-6	55-30-00-05	-093	08
HL70-6	55-30-00-05	-100	10
HL70-6	55-30-00-05	-159	08
HL70-6	55-30-00-05	-168	08
HL70-6	55-30-00-05	-175	08
HL70-6	55-30-00-06	-022	04
HL70-6	55-30-00-07	-008	07
HL70-6	55-30-00-08	-082	22

© Cessna Aircraft Company

PART NUMBER	CH SEC SUBJ FIG	ITEM	REQ
HL70-6	55-30-00-08	-093	23
HL70-6	55-30-00-08	-094	16
HL70-6	55-30-00-08	-100	14
HL70-6	57-10-02-01	-008	AR
HL70-6	57-10-02-01	-092	AR
HL70-6	57-10-02-01	-111	04
HL70-6	57-10-02-01	-124	04
HL70-6	57-10-02-01	-154	04
HL70-6	57-10-02-01	-166	04
HL70-6	57-10-02-01	-176	AR
HL70-6	57-10-02-01	-250	02
HL70-6	57-10-02-01	-262	02
HL70-6	57-10-02-01	-309	05
HL70-6	57-10-02-01	-316	05
HL70-6	57-10-02-01	-328	05
HL70-6	57-10-02-01	-340	05
HL70-6	57-10-02-01	-352	05
HL70-6	57-10-02-01	-409	01
HL70-6	57-10-02-01	-424	01
HL70-6	57-10-02-01	-467	01
HL70-6	57-10-02-01	-482	01
HL70-6	57-10-02-01	-496	01
HL70-6	57-10-02-01	-577	AR
HL70-6	57-10-02-04	-011	03
HL70-6	57-10-02-04	-030	03
HL70-6	57-10-02-04	-044	05
HL70-6	57-10-02-04	-086	06
HL70-6	57-10-02-04	-097	10
HL70-6	57-10-02-04	-104	07
HL70-6	57-10-02-04	-114	02
HL70-6	57-10-02-04	-117	10
HL70-6	57-10-02-05	-014	02
HL70-6	57-10-02-05	-022	03
HL70-6	57-10-02-05	-160	05
HL70-6	57-10-02-05	-164	05
HL70-6	57-10-02-06	-098	AR
HL70-6	57-10-02-07	-016	03
HL70-6	57-10-02-07	-019	08
HL70-6	57-10-02-07	-041	03
HL70-6	57-10-03-06	-023	AR
HL70-6	57-20-00-08	-012	10
HL70-6	57-20-00-08	-021	02
HL70-6	57-20-00-08	-028	02
HL70-6	57-20-00-08	-038	07
HL70-6	57-20-00-08	-080	10
HL70-6	57-20-00-08	-087	09
HL70-6	57-20-00-08	-093	02
HL70-6	57-20-00-08	-101	06
HL70-6	57-20-00-08	-109	03
HL70-6	57-20-00-08	-118	02
HL70-6	57-20-00-08	-155	02
HL70-6	57-20-00-08	-163	07
HL70-6	57-20-00-08	-170	09
HL70-6	57-20-00-08	-177	02
HL70-6	57-20-00-08	-185	07
HL70-6	57-20-00-08	-237	AR
HL70-6	57-20-00-08	-243	06
HL70-6	57-20-00-08	-251	04
HL70-6	57-20-00-08	-308	06
HL70-6	57-20-00-08	-315	17
HL70-6	57-20-01-02	-092	16
HL70-6	57-20-01-03	-009	56
HL70-6	57-20-01-03	-013	02
HL70-6	57-20-01-04	-013	94
HL70-6	57-20-01-04	-017	02
HL70-6	57-20-01-04	-020	12
HL70-6	57-20-01-06	-083	02
HL70-6	57-20-01-07	-078	02
HL70-6	57-20-01-08	-081	02
HL70-6	57-50-00-01	-010	16
HL70-6	57-80-00-01	-017	08
HL70-6	57-80-00-01	-030	04
HL70-8	27-20-00-01	-004	04
HL70-8	55-30-00-02	-013	08
HL70-8	55-30-00-06	-008	02
HL70-8	55-30-00-06	-021	04
HL70-8	55-30-00-07	-011	02
HL70-8	55-30-00-07	-014	04
HL70-8	55-30-00-08	-079	04
HL70-8	55-30-00-08	-098	02
HL70-8	57-10-02-01	-177	06
HL70-8	57-10-02-01	-408	02
HL70-8	57-10-02-01	-422	01
HL70-8	57-10-02-01	-468	02
HL70-8	57-10-02-01	-481	01
HL70-8	57-10-02-01	-495	01
HL70-8	57-10-02-01	-516	AR
HL70-8	57-10-02-01	-538	01
HL70-8	57-10-02-01	-578	AR
HL70-8	57-10-02-06	-099	AR
HL70-8	57-20-00-08	-229	08
HL70-8	57-20-01-03	-010	04
HL70-8	57-80-00-01	-009	07
HL75-10AW	57-10-02-01	-381	06
HL75-10AW	57-80-00-01	-041	06
HL75-5AW	52-20-00-01	-014	04
HL75-5AW	53-24-00-01	-277	24
HL75-6AW	57-10-02-06	-100	AR
HL75-6AW	57-10-02-06	-257	AR
HL75-8AW	57-10-02-01	-488	02
HL75-8AW	57-10-02-01	-502	02
HL75-8AW	57-10-02-01	-529	02
HL75-8AW	57-10-02-06	-101	AR
HL75DU12ADW	57-20-01-04	-026	04
HL75DU5ADW	57-10-02-01	-205	AR
HL75DU6ADW	57-10-02-01	-545	54
HL75DU8ADW	57-20-00-08	-120	01
HL75DU8ADW	57-20-00-08	-179	01
HL77-8	57-10-02-01	-582	AR
HL77-8	57-80-00-01	-033	02
HL82-10AW	57-10-02-01	-418	02
HL82-10AW	57-10-02-01	-459	04
HL82-10AW	57-10-02-01	-476	04
HL82-10AW	57-10-02-01	-490	04
HL82-10AW	57-10-02-01	-505	02
HL82-10AW	57-10-02-01	-532	02
HL82-10AW	57-10-02-06	-247	AR
HL82-12AW	57-10-02-01	-506	02
HL82-12AW	57-10-02-01	-533	02
HL82-5ADW	53-20-00-05	-025	02
HL82-5ADW	53-20-00-05	-033	02
HL82-5ADW	53-20-00-06	-016	02
HL82-5ADW	53-20-00-06	-023	02
HL82-5ADW	53-20-00-08	-024	04

© Cessna Aircraft Company

PART NUMBER	CH SEC SUBJ FIG	ITEM	REQ	PART NUMBER	CH SEC SUBJ FIG	ITEM	REQ
HL82-5ADW	53-20-00-09	-009	04	HL86-6	57-10-02-01	-083	AR
HL82-5ADW	53-20-00-09	-023	02	HL86-6	57-10-02-01	-193	AR
HL82-5ADW	53-60-01-11	-090	06	HL86-6	57-10-02-01	-245	02
HL82-5ADW	57-10-02-08	-024	04	HL86-6	57-10-02-01	-572	AR
HL82-5ADW	57-10-02-08	-030	04	HL86-6	57-80-00-01	-021	06
HL82-5ADW	57-10-02-08	-034	04	HL86-6	57-80-00-01	-100	11
HL82-5ADW	57-10-02-08	-042	04	HL86-8	57-10-02-01	-194	AR
HL82-5AW	53-20-00-04	-026	02	HL86-8	57-10-02-01	-573	AR
HL82-5AW	53-20-00-04	-034	02	HL86DU-5	22-10-10-01	-008	04
HL82-5AW	53-20-00-07	-021	02	HL86DU-5	22-10-10-01	-015	02
HL82-5AW	53-20-00-07	-030	02	HL86DU-5	27-30-05-01	-287	24
HL82-5AW	55-30-00-02	-165	04	HL86DU-5	28-11-55-01	-006	08
HL82-6	55-30-00-02	-026	07	HL86DU-5	53-20-00-06	-119	12
HL82-6	55-30-00-02	-041	AR	HL86DU-5	53-60-00-07	-246	15
HL82-6ADW	55-30-00-08	-096	06	HL86DU-5	55-10-00-01	-011	09
HL82-6ADW	57-10-02-01	-182	AR	HL86DU-5	55-30-00-04	-253	04
HL82-6ADW	57-10-03-06	-024	60	HL86DU-5	55-30-00-08	-021	04
HL82-6AW	55-30-00-05	-177	02	HL86DU-5	55-30-00-08	-026	04
HL82-6AW	55-30-00-08	-012	32	HL86DU-5	57-10-02-01	-197	AR
HL82-6AW	55-30-00-08	-013	29	HL86DU-5	57-20-01-15	-039	02
HL82-6AW	57-10-02-01	-100	AR	HL86DU-5	57-20-05-02	-005	02
HL82-6AW	57-10-02-01	-106	12	HL86DU-5	57-20-05-02	-018	02
HL82-6AW	57-10-02-01	-113	02	HL86DU-5	57-20-05-02	-082	02
HL82-6AW	57-10-02-01	-118	12	HL86DU-5	57-20-05-02	-086	02
HL82-6AW	57-10-02-01	-123	02	HL86DU12	57-20-01-04	-025	04
HL82-6AW	57-10-02-01	-129	12	HL86DU12	57-21-01-01	-018	02
HL82-6AW	57-10-02-01	-156	02	HL86DU20	57-21-01-01	-016	02
HL82-6AW	57-10-02-01	-161	12	HL86DU5	28-11-55-01	-082	04
HL82-6AW	57-10-02-01	-168	02	HL86DU5	55-10-00-01	-097	48
HL82-6AW	57-10-02-01	-187	AR	HL86DU6	27-11-00-01	-238	01
HL82-6AW	57-10-02-01	-304	12	HL86DU6	53-20-00-02	-005	02
HL82-6AW	57-10-02-01	-311	02	HL86DU6	55-10-00-01	-098	44
HL82-6AW	57-10-02-01	-318	02	HL86DU6	57-10-03-06	-028	02
HL82-6AW	57-10-02-01	-323	12	HL86DU8	55-10-00-01	-099	16
HL82-6AW	57-10-02-01	-330	02	HL94DU-5	52-80-00-01	-011	02
HL82-6AW	57-10-02-01	-335	12	HL94DU-5	52-80-00-01	-023	03
HL82-6AW	57-10-02-01	-342	02	HL94DU-5	54-50-00-01	-125	50
HL82-6AW	57-10-02-01	-347	12	HL94DU-6	52-80-00-01	-015	03
HL82-6AW	57-10-02-01	-354	02	HL94DU-6	52-80-00-01	-019	05
HL82-6AW	57-10-02-01	-403	AR	HL94DU-6	52-80-00-01	-027	12
HL82-6AW	57-10-02-06	-102	AR	HL94DU-6	54-50-00-01	-105	14
HL82-6AW	57-10-02-06	-160	AR	HL94DU10	57-80-00-01	-154	04
HL82-6AW	57-10-02-06	-231	AR	HL97-4	52-10-35-01	-080	02
HL82-8AW	57-10-02-01	-404	AR	HL97DU	27-30-05-01	-249	02
HL82-8AW	57-10-02-01	-417	04	HL97DU	53-30-06-01	-170	AR
HL82-8AW	57-10-02-01	-458	02	HL97DU-4	22-10-10-01	-020	03
HL82-8AW	57-10-02-01	-475	02	HL97DU-4	27-10-15-01	-124	08
HL82-8AW	57-10-02-06	-103	AR	HL97DU-4	27-10-15-01	-237	08
HL82-8AW	57-10-02-06	-170	AR	HL97DU-4	27-10-15-01	-252	04
HL82-8AW	57-10-02-06	-244	AR	HL97DU-4	27-10-50-02	-156	04
HL86-10	57-10-02-01	-012	04	HL97DU-4	27-10-50-02	-186	05
HL86-10	57-10-02-01	-574	AR	HL97DU-4	27-10-50-02	-194	02
HL86-10	57-80-00-01	-105	04	HL97DU-4	27-13-00-01	-022	04
HL86-5	52-10-21-01	-164	05	HL97DU-4	27-13-00-01	-031	03
HL86-5	53-22-00-05	-084	08	HL97DU-4	27-13-00-01	-079	04
HL86-5	55-30-00-02	-083	08	HL97DU-4	27-25-00-01	-098	03
HL86-5	55-30-00-02	-194	16	HL97DU-4	27-31-00-01	-019	09
HL86-5	57-10-02-01	-082	AR	HL97DU-4	27-31-00-01	-028	05
HL86-5	57-10-02-01	-231	02	HL97DU-4	32-31-05-01	-041	18
HL86-5	57-10-02-01	-235	AR	HL97DU-4	33-40-17-01	-007	04
HL86-5	57-10-02-01	-240	AR	HL97DU-4	52-10-00-01	-030	04
HL86-6	57-10-02-01	-035	AR	HL97DU-4	52-10-03-01	-022	01

© Cessna Aircraft Company

PART NUMBER	CH SEC SUBJ FIG	ITEM	REQ
HL97DU-4	52-30-00-01	-014	06
HL97DU-4	53-12-00-01	-008	10
HL97DU-4	53-12-00-02	-025	06
HL97DU-4	53-12-00-02	-085	05
HL97DU-4	53-12-00-02	-090	04
HL97DU-4	53-12-15-01	-025	04
HL97DU-4	53-20-00-01	-082	04
HL97DU-4	53-20-00-01	-185	08
HL97DU-4	53-20-00-03	-021	02
HL97DU-4	53-20-00-04	-006	04
HL97DU-4	53-20-00-04	-049	01
HL97DU-4	53-20-00-04	-080	01
HL97DU-4	53-20-00-05	-006	04
HL97DU-4	53-20-00-06	-087	01
HL97DU-4	53-20-00-06	-092	01
HL97DU-4	53-20-00-07	-006	04
HL97DU-4	53-20-00-08	-036	04
HL97DU-4	53-22-00-02	-021	06
HL97DU-4	53-22-00-02	-038	02
HL97DU-4	53-22-00-05	-016	08
HL97DU-4	53-22-00-05	-089	30
HL97DU-4	53-22-00-05	-160	AR
HL97DU-4	53-22-00-05	-168	32
HL97DU-4	53-22-00-06	-004	AR
HL97DU-4	53-22-00-06	-020	AR
HL97DU-4	53-22-00-07	-011	02
HL97DU-4	53-22-00-07	-082	02
HL97DU-4	53-22-00-07	-158	02
HL97DU-4	53-22-00-08	-008	02
HL97DU-4	53-22-00-08	-083	02
HL97DU-4	53-22-00-09	-015	06
HL97DU-4	53-22-00-09	-028	05
HL97DU-4	53-22-00-09	-153	56
HL97DU-4	53-22-00-09	-161	10
HL97DU-4	53-22-00-09	-167	10
HL97DU-4	53-22-00-09	-173	10
HL97DU-4	53-22-00-10	-081	06
HL97DU-4	53-22-00-10	-093	05
HL97DU-4	53-22-00-10	-109	05
HL97DU-4	53-22-00-10	-118	05
HL97DU-4	53-24-00-01	-083	13
HL97DU-4	53-24-00-01	-153	04
HL97DU-4	53-24-00-01	-170	01
HL97DU-4	53-24-00-01	-240	02
HL97DU-4	53-24-00-01	-249	02
HL97DU-4	53-24-00-01	-279	03
HL97DU-4	53-24-00-01	-305	AR
HL97DU-4	53-24-00-01	-315	AR
HL97DU-4	53-30-06-02	-093	AR
HL97DU-4	53-30-06-02	-111	AR
HL97DU-4	53-50-00-03	-004	01
HL97DU-4	53-60-00-07	-083	05
HL97DU-4	53-60-00-07	-096	05
HL97DU-4	53-60-00-07	-156	05
HL97DU-4	53-60-00-07	-169	05
HL97DU-4	53-60-00-07	-231	05
HL97DU-4	53-60-00-07	-241	05
HL97DU-4	53-60-00-07	-251	05
HL97DU-4	53-60-00-07	-307	05
HL97DU-4	53-60-00-07	-324	06
HL97DU-4	53-60-00-07	-382	05
HL97DU-4	53-60-00-07	-395	05
HL97DU-4	53-60-01-01	-013	02
HL97DU-4	53-60-01-01	-027	02
HL97DU-4	53-60-01-01	-031	06
HL97DU-4	53-60-01-01	-079	02
HL97DU-4	53-60-01-01	-084	02
HL97DU-4	53-60-01-01	-089	02
HL97DU-4	53-60-01-01	-094	AR
HL97DU-4	53-60-01-01	-098	02
HL97DU-4	53-60-01-02	-013	01
HL97DU-4	53-60-01-02	-017	02
HL97DU-4	53-60-01-02	-021	02
HL97DU-4	53-60-01-02	-079	04
HL97DU-4	53-60-01-02	-084	02
HL97DU-4	53-60-01-02	-089	04
HL97DU-4	53-60-01-02	-094	04
HL97DU-4	53-60-01-02	-099	04
HL97DU-4	53-60-01-03	-013	02
HL97DU-4	53-60-01-03	-022	02
HL97DU-4	53-60-01-03	-026	05
HL97DU-4	53-60-01-03	-079	03
HL97DU-4	53-60-01-03	-084	03
HL97DU-4	53-60-01-03	-089	03
HL97DU-4	53-60-01-03	-094	03
HL97DU-4	53-60-01-03	-098	02
HL97DU-4	53-60-01-04	-017	AR
HL97DU-4	53-60-01-04	-021	05
HL97DU-4	53-60-01-04	-027	AR
HL97DU-4	53-60-01-04	-030	05
HL97DU-4	53-60-01-04	-034	AR
HL97DU-4	53-60-01-04	-082	02
HL97DU-4	53-60-01-04	-087	03
HL97DU-4	53-60-01-04	-092	03
HL97DU-4	53-60-01-04	-097	03
HL97DU-4	53-60-01-04	-102	03
HL97DU-4	53-60-01-05	-015	03
HL97DU-4	53-60-01-05	-022	04
HL97DU-4	53-60-01-05	-027	02
HL97DU-4	53-60-01-05	-035	02
HL97DU-4	53-60-01-05	-079	02
HL97DU-4	53-60-01-05	-082	02
HL97DU-4	53-60-01-05	-085	02
HL97DU-4	53-60-01-06	-003	02
HL97DU-4	53-60-01-06	-006	02
HL97DU-4	53-60-01-06	-019	03
HL97DU-4	53-60-01-06	-026	04
HL97DU-4	53-60-01-06	-077	02
HL97DU-4	53-60-01-06	-083	02
HL97DU-4	53-60-01-06	-090	01
HL97DU-4	53-60-01-06	-093	02
HL97DU-4	53-60-01-06	-096	02
HL97DU-4	53-60-01-07	-012	04
HL97DU-4	53-60-01-07	-032	AR
HL97DU-4	53-60-01-07	-043	04
HL97DU-4	53-60-01-09	-014	02
HL97DU-4	53-60-01-09	-020	01
HL97DU-4	53-60-01-09	-038	02
HL97DU-4	53-60-01-09	-044	02
HL97DU-4	53-60-01-09	-086	06
HL97DU-4	53-60-01-09	-098	02
HL97DU-4	53-60-01-09	-122	02
HL97DU-4	53-60-01-10	-010	02
HL97DU-4	53-60-01-10	-033	03

© Cessna Aircraft Company

PART NUMBER	CH SEC SUBJ FIG	ITEM	REQ	PART NUMBER	CH SEC SUBJ FIG	ITEM	REQ
HL97DU-4	53-60-01-10	-039	03	HL97DU5	53-45-00-01	-011	08
HL97DU-4	53-60-01-10	-084	02	HL97DU5	53-60-01-09	-110	04
HL97DU-4	53-60-01-10	-111	03	HL97DU5	57-60-00-01	-090	10
HL97DU-4	53-60-01-10	-117	03	HL97KW-5	57-51-00-01	-187	04
HL97DU-4	53-60-01-11	-004	02	HL97KW-6	57-51-00-01	-025	20
HL97DU-4	53-60-01-11	-018	02	HL97KW-6	57-51-00-01	-035	18
HL97DU-4	53-60-01-11	-027	02	HL97KW-6	57-51-00-01	-108	19
HL97DU-4	53-60-01-11	-034	01	HL97KW-6	57-51-00-01	-117	14
HL97DU-4	53-60-01-11	-038	04	HL97KW-6	57-51-00-01	-178	14
HL97DU-4	53-60-01-11	-042	02	HL97KW-6	57-51-00-01	-188	07
HL97DU-4	53-60-01-11	-078	02	HP	11-00-00-01	-089	AR
HL97DU-4	53-60-01-11	-084	02	HR	11-00-00-01	-040	AR
HL97DU-4	53-60-01-11	-088	10	HS	11-00-00-01	-109	AR
HL97DU-4	53-60-01-11	-095	02	HZ	11-00-00-01	-100	AR
HL97DU-4	53-60-01-13	-012	01	I	11-00-00-01	-049	AR
HL97DU-4	53-60-02-03	-010	04	IDL100-01	33-40-30-01	-001	01
HL97DU-4	53-60-02-04	-008	09	IDL100-01	33-40-30-01	-002	01
HL97DU-4	53-60-02-04	-016	07	J7293-11	49-10-00-01	-005	06
HL97DU-4	53-60-03-01	-030	50	JA	11-00-00-01	-052	AR
HL97DU-4	53-60-03-01	-036	02	JAA	11-00-00-01	-050	AR
HL97DU-4	53-60-03-02	-024	09	JEHC1875400L	29-10-00-04	-257	01
HL97DU-4	53-60-04-01	-004	10	JEHC1875400L	29-10-00-04	-302	01
HL97DU-4	53-60-04-01	-011	09	JEHC1875400L	29-10-00-06	-184	01
HL97DU-4	53-60-04-01	-019	10	JETC1875320D	27-80-00-02	-163	04
HL97DU-4	53-60-04-01	-025	07	JETC1875320D	27-80-00-02	-197	04
HL97DU-4	53-60-04-01	-032	04	JETC1875320D	27-80-00-03	-032	04
HL97DU-4	53-60-05-02	-013	03	JETC1875320D	27-80-00-03	-098	04
HL97DU-4	53-60-05-02	-079	04	JETC1875900L	27-80-00-01	-003	04
HL97DU-4	54-50-00-01	-091	14	JETC1875900L	29-10-00-08	-101	04
HL97DU-4	54-50-00-01	-126	04	JEVC1835273H	29-23-00-01	-321	01
HL97DU-4	55-10-00-01	-257	01	JEVC1845808D	29-10-00-05	-235	01
HL97DU-4	55-10-00-02	-027	10	JM5	52-70-50-01	-009	04
HL97DU-4	55-10-00-02	-028	09	JY	11-00-00-01	-053	AR
HL97DU-4	55-10-00-02	-032	08	KA91-02	23-11-20-01	-008	01
HL97DU-4	55-20-00-03	-010	08	KJBA76828B	32-10-00-01	-109	02
HL97DU-4	55-30-00-02	-159	04	KP3AL	27-10-50-01	-046	01
HL97DU-4	55-30-00-02	-167	12	KP3AL	27-10-50-01	-163	01
HL97DU-4	57-20-00-05	-041	84	KP3AL	27-10-50-01	-172	01
HL97DU-4	57-20-00-08	-006	13	KP3AL	27-10-50-01	-188	02
HL97DU-4	57-20-00-08	-320	08	KP3AL	27-10-50-01	-246	02
HL97DU-4	57-20-00-08	-323	02	KP3AL	27-10-50-01	-255	02
HL97DU-4	57-21-00-01	-017	06	KRP163407VT	57-40-10-01	-326	32
HL97DU-4	57-21-00-01	-026	06	KRP217203VT	27-10-50-01	-304	01
HL97DU-4	57-21-01-01	-033	04	L10-611-14	34-55-10-01	-001	01
HL97DU-5	22-10-10-02	-009	02	L10-611-14	34-55-10-01	-002	01
HL97DU-5	22-10-10-02	-013	04	L10-611-14	34-57-00-01	-075	01
HL97DU-5	27-10-15-01	-110	02	L10-611-14	34-57-00-01	-076	01
HL97DU-5	27-10-15-01	-126	06	L10-611-14	34-57-00-01	-083	01
HL97DU-5	53-22-00-02	-025	03	L10-611-14	34-57-00-01	-084	01
HL97DU-5	53-22-00-02	-031	02	L16H-15	28-20-60-01	-001	01
HL97DU-5	53-22-00-09	-155	08	L16H-15	28-20-60-01	-002	01
HL97DU-5	53-22-00-09	-164	36	L16H-15	28-20-65-01	-001	01
HL97DU-5	53-22-00-10	-099	02	L16H-15	28-20-65-01	-002	01
HL97DU-5	53-22-00-10	-111	18	LB9-1256-1-1	32-30-20-01	-007	02
HL97DU-5	53-24-00-01	-154	08	LC015-16AE	28-21-00-02	-101	02
HL97DU-5	53-60-00-07	-006	05	LG4CL1000	25-50-15-01	-007	01
HL97DU-5	53-60-01-06	-100	06	LN	11-00-00-01	-087	AR
HL97DU-5	53-60-01-08	-315	08	LQ	11-00-00-01	-002	AR
HL97DU-6	53-22-00-10	-102	06	LR22116	28-20-10-01	-008	01
HL97DU4	27-00-02-01	-031	01	LR55385-2	28-20-10-01	-001	01
HL97DU4	27-10-50-02	-191	04	LR55385-3	28-20-10-01	-002	01
HL97DU4	32-31-05-01	-005	06	LR57473-1	28-20-10-01	-005	01

© Cessna Aircraft Company

PART NUMBER	CH SEC SUBJ FIG	ITEM	REQ
LV	11-00-00-01	-003	AR
LX	11-00-00-01	-058	AR
LY	11-00-00-01	-057	AR
LZ	11-00-00-01	-018	AR
M	11-00-00-01	-047	AR
M24308/2-1	45-45-00-01	-002	01
M24308/2-1	45-45-00-01	-003	01
M24308/2-2F	45-45-00-01	-005	01
M24308/26-1	35-20-15-01	-012	02
M25988/1-010	28-10-10-01	-002	01
M25988/1-016	73-10-00-01	-036	01
M25988/1-152	28-20-10-01	-006	01
M25988/1-910	73-10-00-01	-034	01
M25988/3-117	28-21-00-02	-243	01
M25988/3-130	28-21-00-02	-242	02
M25988/3-237	57-00-05-01	-082	01
M25988/3-237	57-00-05-01	-090	01
M25988/3-237	57-10-01-01	-017	01
M25988/3-259	57-00-05-01	-098	01
M25988/3-372	28-20-05-01	-014	02
M266	52-40-15-01	-003	02
M5593-3	21-23-00-01	-150	AR
M5593-4	21-50-20-01	-002	AR
M5593-4	36-15-00-01	-028	AR
M6106/19-012	24-60-05-01	-029	01
M6106/19-012	24-60-05-01	-030	01
M6106/19-012	24-60-05-02	-029	01
M6106/19-012	24-60-05-02	-030	01
M6106/19-012	24-60-05-02	-032	01
M6106/19-012	24-60-10-01	-234	01
M81714/60-20-01	24-60-10-01	-241	01
M81714/60-20-01	24-60-10-01	-242	01
M81714/60-20-01	24-60-10-01	-243	01
M81714/60-20-01	24-60-10-01	-244	01
M81714/60-20-01	24-60-10-02	-241	01
M81714/60-20-01	24-60-10-02	-242	01
M81714/60-20-01	24-60-10-02	-243	01
M81934/1-04C012	27-25-00-02	-013	02
M81934/1-06C020	52-30-00-01	-026	01
M81934/1-07C009	56-15-00-01	-097	01
M81934/1-10C044	32-10-00-01	-096	01
M81934/2-04A014	27-13-05-01	-238	02
M81934/2-04A014	27-32-00-01	-245	02
M81934/2-04A014	27-60-00-01	-161	02
M81934/2-04C008	27-10-50-01	-219	02
M81934/2-05C008	32-31-05-01	-025	02
M81934/2-06C005	52-10-11-01	-194	01
M81934/2-06C020	52-10-11-01	-193	01
M81934/2-07C007	27-36-00-01	-231	02
M81934/2-07C007	52-10-11-01	-191	02
M81934/2-07C016	32-31-25-01	-021	02
M81934/2-10C008	52-10-13-01	-027	01
M81934/2-10C014	57-80-00-01	-155	01
M81934/2-11C024	52-10-22-01	-024	01
M81934/2-11C024	52-10-22-01	-096	01
M81934/2-11C024	52-10-22-01	-173	01
M81934/2-11C024	52-10-22-01	-247	01
M81934/2-14C016	52-10-22-02	-392	02
M81934/2-14C016	52-10-22-02	-397	02
M81935/1-3	32-10-30-01	-093	02
M81935/1-4	32-30-00-01	-021	01
M81935/1-4	32-30-00-01	-083	02
M81935/1-6	27-10-30-01	-539	02
M81935/2-7K	27-20-00-01	-100	01
M81935/6-03	32-10-30-01	-093A	02
M83248/1-033	21-50-00-01	-013	01
M83248/1-040	28-20-10-01	-007	01
M83248/1-113	24-20-00-01	-006	01
M83248/1-113	24-30-00-01	-013	01
M83248/1-113	73-10-00-01	-031	01
M83248/1-113	73-10-00-02	-034	01
M83248/1-210	80-10-00-01	-078	01
M83248/1-241	80-10-00-01	-077	01
M83413/8-G004BB	33-40-15-01	-009	01
M83413/8-G04BB	57-30-00-01	-086	01
M83454/04AA108	25-60-00-01	-017	01
M83461/2-905	26-20-15-01	-007	01
M83461/2-905	26-23-00-01	-006	01
M83536/32-003	24-60-10-02	-229	01
M83536/9-024	24-60-05-01	-031	01
M83536/9-024	24-60-05-01	-032	01
M83536/9-024	24-60-05-01	-033	01
M83536/9-024	24-60-05-02	-031	01
M83536/9-024	24-60-10-01	-229	01
M83536/9-024	24-60-10-01	-230	01
M83536/9-024	24-60-10-01	-231	01
M83536/9-024	24-60-10-01	-232	01
M83536/9-024	24-60-10-01	-233	01
M83536/9-024	24-60-10-02	-230	01
M83536/9-024	24-60-10-02	-231	01
M83536/9-024	24-60-10-02	-232	01
M83536/9-024	24-60-10-02	-233	01
M83536/9-024	24-60-10-02	-234	01
M85528/2-14-A	24-60-05-01	-014	01
M85528/2-14-A	24-60-05-02	-014	01
M85528/2-14-A	31-37-00-01	-004	01
M85528/2-16-A	24-60-05-01	-015	01
M85528/2-16-A	24-60-05-02	-015	01
M85528/2-16-A	24-60-10-01	-029	02
M85528/2-16-A	24-60-10-02	-029	02
M85528/2-16-A	24-60-15-01	-095	03
M85528/2-18-A	24-60-05-01	-016	01
M85528/2-18-A	24-60-05-02	-016	01
M85528/2-18-A	24-60-10-01	-030	02
M85528/2-18-A	24-60-10-02	-030	02
M85528/2-20-A	24-60-10-01	-031	01
M85528/2-20-A	24-60-10-02	-031	01
M85528/2-22-A	24-60-10-01	-032	01
M85528/2-22-A	24-60-10-02	-032	02
M85528/2-24-B	24-60-05-01	-012	02
M85528/2-24-B	24-60-05-02	-012	02
M85528/2-24-B	24-60-10-01	-034	05
M85528/2-24-B	24-60-10-02	-034	05
M85528/2-24-B	24-60-15-01	-097	02
M85528/2-8A	52-70-60-01	-005	01
M85528/3-8	24-30-30-01	-035	04
MBF2122-6-300	57-51-00-01	-100	02
MBF2122-6-350	57-51-00-01	-017	02
MBF2122-6-350	57-51-00-01	-101	04
MBF2122-6-350	57-51-00-01	-171	02
MBF2122-6-400	57-51-00-01	-016	06
MBF2122-6-400	57-51-00-01	-099	02
MBF2122-6-400	57-51-00-01	-170	06
MBF2123-5-300	57-60-00-02	-012	04

© Cessna Aircraft Company

PART NUMBER	CH SEC SUBJ FIG	ITEM	REQ	PART NUMBER	CH SEC SUBJ FIG	ITEM	REQ
MBF2123-5-350	57-60-00-02	-005	AR	MS16562-31	53-10-10-02	-097	04
MBF2123-5-450	57-60-00-02	-006	AR	MS16562-33	52-10-13-01	-009	01
MBS68811-375S	32-33-05-01	-009	01	MS16562-37	25-50-15-01	-028	01
MC10-16-150	35-10-05-01	-001	02	MS16562-37	25-50-15-01	-090	04
ME	11-00-00-01	-080	AR	MS16562-65	52-10-19-01	-154	01
MIL-P-8346/1-113	29-10-10-01	-005	01	MS16562-7	27-36-00-01	-048	01
MIL-P-8346/1-113	29-10-10-01	-154	01	MS16624-1031	57-60-00-01	-008	02
MLD20-505	35-10-05-01	-002	02	MS16624-1037	27-11-00-01	-241	01
MNI-10-8	27-50-20-01	-033	08	MS16624-1050	57-60-00-01	-009	02
MNI-4-10	27-50-20-01	-037	06	MS16624-1056	55-20-00-01	-084	01
MS14101-12	32-30-20-01	-020	01	MS16624-1100	52-10-19-01	-089	02
MS14102-4	57-70-00-01	-007	01	MS16624-2062	27-40-00-01	-004	02
MS14102-4	57-70-00-01	-023	01	MS16624-2081	52-30-20-01	-004	01
MS14102-4	57-70-00-01	-032	01	MS16624-4025	27-50-00-01	-109	02
MS14102-4	57-70-00-01	-088	01	MS16624-4025	27-50-00-01	-167	02
MS14102-4	57-70-00-01	-102	01	MS16624-4025	27-50-00-01	-254	02
MS14102-5	52-10-22-02	-328	01	MS16624-4025	27-50-00-01	-320	02
MS14102-6	55-10-00-01	-007	01	MS16624-4025	27-50-00-01	-393	02
MS14102-6	55-20-00-01	-031	01	MS16624-4025	27-50-00-01	-470	02
MS14102-6	57-70-00-01	-078	02	MS16624-4025	55-20-00-01	-028	02
MS14102-6	57-70-00-01	-092	02	MS16624-4031	55-20-00-01	-027	01
MS14103-12	32-30-20-01	-019	01	MS16624-4037	52-10-37-01	-090	02
MS14104-3	27-10-50-01	-247	01	MS16624-4037	55-20-00-01	-026	02
MS14104-4K	52-10-22-02	-182	01	MS16624-4037	57-60-00-01	-010	02
MS14104-8	53-22-00-05	-092	01	MS16625-1062	35-10-20-01	-013	01
MS14104-8	53-22-00-06	-005	01	MS16625-1100	38-32-05-01	-015	01
MS14104-8	57-80-00-01	-089	01	MS16625-1100	38-32-10-01	-023	01
MS14104-8	57-80-00-01	-101	01	MS16625-4150	27-31-00-01	-031	01
MS14108-3	24-30-30-01	-019	01	MS16625-4193	27-33-00-01	-013	01
MS14238C05-041	57-51-00-01	-118	01	MS16626-4106	27-10-50-01	-106	04
MS14238C05-041	57-51-00-01	-180	01	MS16633-4018	25-50-15-01	-078	02
MS14238C05-041	57-51-00-01	-190	01	MS16995-10	27-24-00-01	-008	16
MS14238C06-041	57-51-00-01	-026	01	MS16996-11	27-60-00-01	-016	02
MS14238C06-041	57-51-00-01	-036	01	MS17825-12	55-10-00-01	-017	02
MS14238C06-041	57-51-00-01	-109	01	MS17825-3	22-10-10-01	-024	01
MS15002-1	32-10-00-01	-019	NP	MS17825-3	22-10-10-01	-041	03
MS15002-1	32-10-00-01	-079	NP	MS17825-3	27-10-30-01	-011	01
MS15002-1	32-10-00-01	-093	01	MS17825-3	27-10-50-01	-154	02
MS15002-3	32-10-00-01	-021	NP	MS17825-3	27-10-50-01	-161	02
MS15573-3	33-30-30-01	-003	01	MS17825-3	27-10-50-01	-177	01
MS15795-728	32-10-00-01	-081	01	MS17825-3	27-10-50-01	-202	02
MS15795-728	32-10-30-01	-008	02	MS17825-3	27-10-50-01	-265	02
MS15795-803	27-24-00-01	-009	16	MS17825-3	27-11-00-01	-081	01
MS15795-805	33-40-25-01	-008	01	MS17825-3	27-11-00-01	-088	01
MS15795-816	57-80-00-01	-025	02	MS17825-3	27-11-00-01	-096	01
MS15795-846	27-40-00-01	-024	06	MS17825-3	27-11-00-01	-155	02
MS16555-602	52-10-11-01	-009	02	MS17825-3	27-11-00-01	-161	01
MS16555-602	52-10-11-01	-011	02	MS17825-3	27-11-00-01	-168	01
MS16555-602	52-10-22-02	-402	01	MS17825-3	27-11-00-01	-179	01
MS16555-644	57-60-00-03	-014	02	MS17825-3	27-11-00-01	-229	01
MS16555-646	27-10-50-01	-004	01	MS17825-3	27-11-20-01	-012	01
MS16555-650	27-10-50-01	-009	01	MS17825-3	27-11-20-01	-017	01
MS16562-10	52-10-19-01	-159	01	MS17825-3	27-11-20-01	-031	02
MS16562-17	52-10-11-01	-003	01	MS17825-3	27-13-00-01	-016	01
MS16562-18	52-10-11-01	-019	01	MS17825-3	27-13-05-01	-009	01
MS16562-218	52-10-21-01	-085	01	MS17825-3	27-13-05-01	-020	01
MS16562-25	27-11-00-01	-002	01	MS17825-3	27-13-05-01	-177	01
MS16562-27	27-11-00-01	-019	02	MS17825-3	27-20-00-01	-012	02
MS16562-31	52-10-13-01	-010	02	MS17825-3	27-20-05-01	-005	01
MS16562-31	53-10-10-02	-012	04	MS17825-3	27-24-15-01	-010	02
MS16562-31	53-10-10-02	-024	04	MS17825-3	27-32-00-01	-026	01
MS16562-31	53-10-10-02	-084	04	MS17825-3	27-32-00-01	-092	02

© Cessna Aircraft Company

PART NUMBER	CH SEC SUBJ FIG	ITEM	REQ	PART NUMBER	CH SEC SUBJ FIG	ITEM	REQ
MS17825-3	27-32-00-01	-235	01	MS17825-4	27-36-00-01	-038	01
MS17825-3	27-33-25-01	-005	02	MS17825-4	27-36-00-01	-045	01
MS17825-3	27-35-00-01	-080	01	MS17825-4	27-60-00-01	-005	01
MS17825-3	27-35-00-02	-020	02	MS17825-4	27-60-00-01	-027	01
MS17825-3	27-36-00-01	-028	02	MS17825-4	27-60-00-01	-090	01
MS17825-3	27-60-00-01	-022	02	MS17825-4	27-60-00-01	-153	01
MS17825-3	27-60-30-01	-012	06	MS17825-4	32-30-00-01	-090	04
MS17825-3	27-80-10-01	-004	08	MS17825-4	32-35-00-01	-081A	01
MS17825-3	27-80-10-01	-039	01	MS17825-4	32-49-00-01	-080	01
MS17825-3	32-20-00-02	-006	01	MS17825-4	36-10-20-03	-092	01
MS17825-3	32-30-00-01	-091	06	MS17825-4	52-10-11-01	-168	01
MS17825-3	32-51-00-01	-005	02	MS17825-4	52-10-11-01	-180	01
MS17825-3	36-10-20-01	-043	04	MS17825-4	52-10-11-01	-228	01
MS17825-3	36-10-20-02	-101	01	MS17825-4	55-40-00-01	-010	01
MS17825-3	36-10-20-03	-021	02	MS17825-5	27-10-50-01	-194	01
MS17825-3	36-10-20-03	-082	01	MS17825-5	27-20-00-01	-113	01
MS17825-3	52-10-03-01	-087	02	MS17825-5	27-20-00-01	-177	02
MS17825-3	52-10-11-01	-232	01	MS17825-5	27-20-00-01	-185	02
MS17825-3	52-10-21-01	-021	01	MS17825-5	27-20-05-02	-078	01
MS17825-3	52-30-00-01	-023	01	MS17825-5	27-20-15-01	-009	01
MS17825-3	52-40-11-01	-004	02	MS17825-5	27-20-15-01	-011	01
MS17825-3	52-40-23-01	-009	02	MS17825-5	27-24-05-01	-005	02
MS17825-3	52-40-25-01	-006	01	MS17825-5	27-30-05-01	-095	01
MS17825-3	52-40-51-01	-006	01	MS17825-5	27-30-05-01	-234	01
MS17825-3	52-40-51-01	-024	01	MS17825-5	27-30-05-01	-256	01
MS17825-4	22-10-10-02	-017	01	MS17825-5	27-30-05-01	-276	01
MS17825-4	22-10-10-02	-023	01	MS17825-5	27-31-00-01	-008	02
MS17825-4	27-10-15-01	-166	01	MS17825-5	27-32-00-01	-008	01
MS17825-4	27-10-30-01	-078	01	MS17825-5	27-32-00-01	-017	01
MS17825-4	27-10-30-01	-086	01	MS17825-5	27-33-00-01	-020	02
MS17825-4	27-10-30-01	-153	01	MS17825-5	27-33-00-01	-078	01
MS17825-4	27-10-30-01	-311	01	MS17825-5	27-33-00-01	-083	01
MS17825-4	27-10-50-01	-168	01	MS17825-5	27-33-00-01	-088	01
MS17825-4	27-10-50-01	-208	01	MS17825-5	27-33-00-01	-093	01
MS17825-4	27-10-50-01	-266	01	MS17825-5	27-33-00-01	-098	02
MS17825-4	27-11-00-01	-255	02	MS17825-5	27-33-00-01	-104	02
MS17825-4	27-11-00-01	-259	01	MS17825-5	27-33-00-01	-175	02
MS17825-4	27-13-00-01	-153	01	MS17825-5	49-10-00-01	-019	04
MS17825-4	27-13-00-01	-167	01	MS17825-5	52-10-03-01	-101	02
MS17825-4	27-13-05-01	-029	01	MS17825-5	52-10-22-02	-018	01
MS17825-4	27-13-05-01	-230	01	MS17825-5	52-10-22-02	-032	AR
MS17825-4	27-20-00-01	-017	01	MS17825-5	52-10-22-02	-079	02
MS17825-4	27-20-00-01	-028	01	MS17825-5	52-10-22-02	-254	02
MS17825-4	27-20-00-01	-045	06	MS17825-5	52-10-22-02	-320	02
MS17825-4	27-20-00-01	-085	01	MS17825-5	52-10-22-02	-326	01
MS17825-4	27-20-00-01	-112	01	MS17825-5	52-10-22-02	-388	02
MS17825-4	27-20-00-01	-121	02	MS17825-5	55-40-00-01	-011	01
MS17825-4	27-20-00-01	-161	01	MS17825-5	56-15-00-01	-016	01
MS17825-4	27-20-00-01	-172	02	MS17825-7	27-20-00-01	-094	01
MS17825-4	27-20-00-01	-192	01	MS17825-7	27-36-00-01	-081	02
MS17825-4	27-20-05-01	-092	02	MS17825-8	49-10-00-01	-006	03
MS17825-4	27-20-05-01	-155	01	MS17825-8	52-10-00-01	-077	02
MS17825-4	27-20-05-01	-174	01	MS17825-8	52-10-22-01	-021	01
MS17825-4	27-20-05-02	-087	01	MS17825-8	52-10-22-01	-093	01
MS17825-4	27-21-00-01	-016	01	MS17825-8	52-10-22-01	-169	01
MS17825-4	27-26-00-01	-005	01	MS17825-8	52-10-22-01	-243	01
MS17825-4	27-30-05-01	-079	01	MS17826-10	27-10-50-01	-311	01
MS17825-4	27-30-05-01	-172	01	MS17826-10	27-40-00-01	-009	01
MS17825-4	27-32-00-01	-018	01	MS17826-10	32-30-20-01	-009	02
MS17825-4	27-32-00-01	-085	03	MS17826-10	57-80-00-01	-004	02
MS17825-4	27-33-00-01	-154	01	MS17826-10	57-80-00-01	-158	04
MS17825-4	27-36-00-01	-009	01	MS17826-12	32-30-20-01	-004	01

© Cessna Aircraft Company

PART NUMBER	CH SEC SUBJ FIG	ITEM	REQ	PART NUMBER	CH SEC SUBJ FIG	ITEM	REQ
MS17826-14	32-10-00-01	-116	02	MS17826-4	55-20-00-01	-024	02
MS17826-14	32-30-30-01	-007	01	MS17826-4	57-70-00-01	-046	06
MS17826-16	55-10-00-01	-003	02	MS17826-4	57-70-00-01	-112	12
MS17826-3	27-10-30-01	-381	01	MS17826-5	27-10-50-01	-083	02
MS17826-3	27-10-50-01	-044	01	MS17826-5	27-10-50-01	-087	02
MS17826-3	27-10-50-01	-109	02	MS17826-5	27-10-50-01	-103	02
MS17826-3	27-10-50-01	-238	02	MS17826-5	27-10-50-02	-093	01
MS17826-3	27-10-50-01	-244	01	MS17826-5	27-13-00-01	-234	01
MS17826-3	27-10-50-01	-253	01	MS17826-5	27-20-15-01	-010	01
MS17826-3	27-10-50-01	-306	01	MS17826-5	27-32-00-01	-007	01
MS17826-3	27-10-50-01	-321	01	MS17826-5	27-32-00-01	-159	01
MS17826-3	27-10-50-01	-328	01	MS17826-5	32-31-25-01	-019	01
MS17826-3	27-10-50-01	-334	02	MS17826-5	57-51-00-01	-091	01
MS17826-3	27-13-05-01	-155	01	MS17826-5	57-51-00-01	-161	02
MS17826-3	27-13-05-01	-159	01	MS17826-6	27-10-30-01	-392	01
MS17826-3	27-13-05-01	-245	02	MS17826-6	27-10-30-01	-537	02
MS17826-3	27-20-05-01	-078	01	MS17826-6	27-13-35-01	-006	02
MS17826-3	27-20-05-01	-104	01	MS17826-6	27-60-40-01	-007	02
MS17826-3	27-24-10-01	-005	02	MS17826-6	32-51-00-01	-155	02
MS17826-3	27-24-10-01	-012	02	MS17826-6	55-10-00-01	-021	01
MS17826-3	27-25-00-01	-109	01	MS17826-6	55-40-00-01	-080	03
MS17826-3	27-25-00-01	-166	01	MS17826-6	57-51-00-01	-009	02
MS17826-3	27-25-00-01	-272	01	MS17826-6	57-51-00-01	-089	01
MS17826-3	27-25-00-01	-329	01	MS17826-6	57-51-00-01	-163	01
MS17826-3	27-32-00-01	-158	01	MS17826-6	57-60-00-01	-015	01
MS17826-3	27-32-00-01	-177	02	MS17826-6	57-70-00-01	-047	06
MS17826-3	27-60-00-01	-165	02	MS17826-6	57-70-00-01	-113	04
MS17826-3	27-60-00-01	-176	03	MS17826-7	57-40-10-01	-330	32
MS17826-3	27-60-30-01	-099	04	MS17826-7	57-51-00-01	-092	01
MS17826-3	27-80-10-01	-017	01	MS17826-7	57-51-00-01	-162	01
MS17826-3	32-35-00-01	-006	01	MS17826-8	32-10-00-01	-099	01
MS17826-3	32-35-00-01	-021	02	MS17826-8	57-51-00-01	-010	02
MS17826-3	32-35-00-01	-036	02	MS17826-8	57-51-00-01	-090	01
MS17826-3	32-43-00-01	-005	01	MS17826-8	57-80-00-01	-082	02
MS17826-3	32-43-00-01	-013	01	MS17826-9	32-20-00-01	-004	02
MS17826-3	32-43-00-01	-037	01	MS17826-9	55-10-00-01	-027	03
MS17826-3	32-43-00-01	-152	01	MS17984C313	25-50-00-01	-094	02
MS17826-3	32-43-00-01	-156	02	MS17987C418	25-10-01-01	-008	01
MS17826-3	32-45-00-01	-003	01	MS18029-5S-2	24-30-30-01	-076	01
MS17826-3	55-20-00-01	-023	02	MS18063-11	57-70-00-01	-008	01
MS17826-3	57-60-00-01	-014	01	MS18063-11	57-70-00-01	-012	01
MS17826-4	27-10-50-01	-022	01	MS18063-11	57-70-00-01	-020	01
MS17826-4	27-10-50-01	-093	03	MS18063-11	57-70-00-01	-024	01
MS17826-4	27-10-50-01	-169	01	MS18063-11	57-70-00-01	-033	01
MS17826-4	27-10-50-01	-228	02	MS18063-11	57-70-00-01	-037	01
MS17826-4	27-20-05-01	-098	01	MS18063-11	57-70-00-01	-082	01
MS17826-4	27-32-00-01	-170	01	MS18063-11	57-70-00-01	-086	01
MS17826-4	27-32-00-01	-183	01	MS18063-11	57-70-00-01	-096	01
MS17826-4	27-32-00-01	-236	01	MS18063-11	57-70-00-01	-100	01
MS17826-4	27-50-00-01	-079	01	MS18063-36	53-40-00-01	-001	18
MS17826-4	27-50-00-01	-154	01	MS18063-36	55-30-00-03	-024	02
MS17826-4	27-50-00-01	-229	01	MS20001PH5-550	52-40-29-01	-002	02
MS17826-4	27-50-00-01	-304	01	MS20001PH5-550	52-40-49-01	-002	02
MS17826-4	27-50-00-01	-379	01	MS20002C4	27-20-00-01	-079	01
MS17826-4	27-50-00-01	-454	01	MS20002C4	27-20-05-02	-085	01
MS17826-4	27-80-10-01	-011	02	MS20002C4	27-26-00-01	-004	01
MS17826-4	27-80-10-01	-030	01	MS20002C4	27-36-00-01	-089	08
MS17826-4	32-10-00-01	-007	01	MS20002C5	27-20-00-01	-110	01
MS17826-4	32-10-00-01	-091	01	MS20002C7	27-20-00-01	-092	01
MS17826-4	32-31-05-01	-037	02	MS20002C7	56-15-00-01	-077	01
MS17826-4	32-35-00-01	-081	01	MS20004-4	32-43-10-01	-002	04
MS17826-4	32-43-00-01	-029	04	MS20004-8	34-43-00-01	-003	04

© Cessna Aircraft Company

PART NUMBER	CH SEC SUBJ FIG	ITEM	REQ	PART NUMBER	CH SEC SUBJ FIG	ITEM	REQ
MS20004-9	27-36-00-01	-088	08	MS20392-2C19	32-31-25-01	-024	01
MS20074-05-04	29-10-05-01	-003	02	MS20392-2C19	52-30-20-01	-027	01
MS20219-1	27-60-00-01	-097	04	MS20392-2C21	27-20-05-02	-089	01
MS20219-1	27-60-00-01	-099	01	MS20392-2C21	27-60-20-01	-080	02
MS20219-1	32-35-00-02	-023	01	MS20392-2C23	52-30-20-01	-028	01
MS20219-2	32-43-00-01	-023	02	MS20392-2C25	27-13-05-01	-011	01
MS20219-2	32-43-00-01	-027	04	MS20392-2C27	27-13-00-01	-236	02
MS20219-2	32-51-00-01	-014	04	MS20392-2C27	27-13-05-01	-012	01
MS20219-2	32-51-00-01	-018	02	MS20392-2C27	27-60-30-01	-017	02
MS20219-2	32-51-00-01	-022	02	MS20392-2C29	27-13-05-01	-179	01
MS20219-4	22-10-10-02	-014	01	MS20392-2C29	27-60-20-01	-028	02
MS20219-4	22-10-10-02	-019	01	MS20392-2C31	27-25-00-01	-122	01
MS20219-4	27-13-05-01	-025	01	MS20392-2C31	27-25-00-01	-155	01
MS20220-3	27-13-00-01	-231	02	MS20392-2C31	27-25-00-01	-260	01
MS20220-4	27-20-05-02	-008	02	MS20392-2C31	27-25-00-01	-317	01
MS20220-4	27-20-05-02	-075	02	MS20392-2C31	32-49-00-01	-082	01
MS20220-4	27-30-05-01	-230	04	MS20392-2C33	27-60-20-01	-158	02
MS20220-4	27-30-05-01	-253	04	MS20392-2C39	27-30-05-01	-174	01
MS20220-4	27-30-05-01	-273	04	MS20392-2C41	22-10-10-02	-027	01
MS20253-2-170	24-60-00-01	-041	14	MS20392-2C41	25-10-01-03	-010	02
MS20253P2-13.30	52-10-31-01	-103	02	MS20392-2C41	27-60-20-01	-157	02
MS20253P2-200	52-40-33-01	-014	01	MS20392-2C45	27-13-05-01	-097	02
MS20253P2-200	52-40-47-01	-020	01	MS20392-2C45	27-60-30-01	-091	02
MS20253P2-300	52-40-33-01	-007	01	MS20392-2C45	71-10-00-01	-158	02
MS20253P2-325L	36-10-20-03	-007	01	MS20392-2C47	27-13-05-01	-077	02
MS20253P2-380	52-40-19-01	-011	01	MS20392-2C47	27-60-30-01	-086	02
MS20253P2-400	52-40-47-01	-012	01	MS20392-2C49	27-20-05-02	-080	01
MS20253P2-550	52-40-29-01	-005	01	MS20392-2C49	27-30-05-01	-258	02
MS20253P2-550	52-40-49-01	-005	01	MS20392-2C49	27-30-05-01	-278	02
MS20253P2-630	52-40-15-01	-008	01	MS20392-2C7	27-25-00-01	-084	01
MS20392-1C11	52-10-11-01	-024	03	MS20392-2C7	27-25-00-01	-184	01
MS20392-1C13	52-10-03-01	-161	01	MS20392-2C7	27-25-00-01	-256	01
MS20392-1C13	52-10-11-01	-241	01	MS20392-2C7	27-25-00-01	-313	01
MS20392-1C15	52-10-11-01	-255	02	MS20392-2C7	52-10-03-01	-018	01
MS20392-1C17	32-31-05-01	-010	01	MS20392-2C7	52-10-35-01	-007	01
MS20392-1C17	52-10-11-01	-089	01	MS20392-2C7	52-10-35-01	-015	01
MS20392-1C17	52-10-11-01	-263	01	MS20392-2C9	27-10-50-01	-048	01
MS20392-1C17	52-40-25-01	-015	02	MS20392-2C9	27-60-20-01	-006	02
MS20392-1C17	52-40-51-01	-017	04	MS20392-2R11	52-10-21-01	-025	01
MS20392-1C17	52-40-51-01	-041	04	MS20392-2R11	52-10-21-01	-029	01
MS20392-1C19	32-31-25-01	-023	01	MS20392-2R13	52-10-21-01	-015	02
MS20392-1C23	32-51-00-01	-026	02	MS20392-2R17	52-10-21-01	-081	01
MS20392-1C23	52-10-11-01	-087	01	MS20392-2R17	52-10-21-01	-101	01
MS20392-1C33	52-10-03-01	-160	01	MS20392-2R47	52-10-13-01	-003	01
MS20392-1C33	52-10-11-01	-242	01	MS20392-3C15	27-10-50-01	-034	01
MS20392-1C33	52-10-21-01	-159	01	MS20392-3C23	32-43-00-01	-076	01
MS20392-1C39	27-10-30-01	-304	12	MS20392-3C27	52-10-11-01	-250	01
MS20392-1C47	52-10-11-01	-258	01	MS20392-3R17	52-10-37-01	-085	02
MS20392-1C7	52-20-10-01	-015	01	MS20392-3R19	52-10-22-01	-028	01
MS20392-2C13	21-50-10-01	-015	02	MS20392-3R19	52-10-22-01	-101	01
MS20392-2C13	27-60-20-01	-161	02	MS20392-3R19	52-10-22-01	-180	01
MS20392-2C13	32-35-00-02	-041	01	MS20392-3R19	52-10-22-01	-252	02
MS20392-2C13	32-49-00-01	-087	02	MS20392-3R21	52-10-22-02	-162	01
MS20392-2C13	52-20-10-01	-009	01	MS20392-3R29	52-10-22-01	-179	01
MS20392-2C13	52-30-20-01	-026	02	MS20392-3R29	52-10-22-02	-151	01
MS20392-2C13	52-30-20-01	-036	01	MS20392-3R29	52-10-37-01	-087	01
MS20392-2C17	27-13-05-01	-022	01	MS20392-3R39	52-10-22-02	-154	01
MS20392-2C17	27-30-05-01	-175	01	MS20392-3R39	52-10-37-01	-088	01
MS20392-2C17	27-60-30-01	-014	08	MS20392-3S43	52-10-19-01	-176	01
MS20392-2C17	32-31-05-01	-011	01	MS20392-4C15	27-10-50-01	-111	02
MS20392-2C17	52-30-20-01	-083	01	MS20760D20	53-20-00-01	-008	01
MS20392-2C19	27-11-00-01	-090	02	MS20813-1	32-51-05-01	-028	01

© Cessna Aircraft Company

PART NUMBER	CH SEC SUBJ FIG	ITEM	REQ
MS20819-4D	21-33-00-01	-029	01
MS20819-4D	21-33-00-01	-040	01
MS20819-4D	37-10-00-01	-006	01
MS20822-4	36-15-00-02	-083	01
MS20822-4D	34-10-00-02	-088	04
MS20822-5D	35-10-00-01	-008	01
MS20822-5D	35-10-00-01	-018	02
MS20822-5D	35-20-00-01	-002	01
MS20822-6-2D	34-10-00-02	-087	02
MS20826-6D	34-10-00-02	-009	02
MS20913-1D	52-11-00-01	-002	01
MS21025-24	32-41-05-01	-003	01
MS21042-04	21-60-00-01	-163	03
MS21042-04	52-10-03-01	-035	01
MS21042-06	21-23-25-01	-010	03
MS21042-06	27-10-50-01	-053	01
MS21042-06	27-21-00-01	-031	02
MS21042-06	34-10-25-01	-005	02
MS21042-06	52-40-19-01	-007	04
MS21042-06	52-40-45-01	-009	04
MS21042-08	22-10-10-01	-033	03
MS21042-08	22-10-10-01	-037	02
MS21042-08	27-00-02-01	-004	03
MS21042-08	27-00-02-01	-010	02
MS21042-08	27-00-02-01	-018	02
MS21042-08	27-00-02-01	-027	02
MS21042-08	27-00-02-01	-036	02
MS21042-08	27-00-02-01	-043	04
MS21042-08	27-00-02-01	-047	05
MS21042-08	27-00-02-01	-078	05
MS21042-08	27-00-02-01	-088	03
MS21042-08	27-00-02-01	-095	02
MS21042-08	27-00-02-01	-099	03
MS21042-08	27-00-02-01	-104	05
MS21042-08	27-00-02-01	-108	03
MS21042-08	27-00-02-01	-113	02
MS21042-08	27-00-02-01	-119	07
MS21042-08	27-00-02-01	-154	02
MS21042-08	27-00-02-01	-161	04
MS21042-08	27-00-02-01	-167	04
MS21042-08	27-00-02-01	-171	04
MS21042-08	27-00-02-01	-176	04
MS21042-08	27-00-02-01	-182	04
MS21042-08	27-00-02-01	-186	03
MS21042-08	27-00-02-01	-228	03
MS21042-08	27-00-02-01	-233	02
MS21042-08	27-00-02-01	-237	05
MS21042-08	27-00-02-01	-241	02
MS21042-08	27-00-02-01	-247	02
MS21042-08	27-00-02-01	-251	01
MS21042-08	27-00-02-01	-255	03
MS21042-08	27-00-02-01	-259	02
MS21042-08	27-00-02-01	-265	02
MS21042-08	27-00-02-01	-270	02
MS21042-08	27-10-15-01	-116	02
MS21042-08	27-10-30-01	-469	04
MS21042-08	27-20-00-01	-129	01
MS21042-08	27-20-05-01	-254	03
MS21042-08	27-20-05-01	-258	03
MS21042-08	27-20-05-01	-266	04
MS21042-08	27-20-05-01	-272	03
MS21042-08	27-20-05-02	-013	02
MS21042-08	27-20-05-02	-017	02
MS21042-08	27-20-05-02	-021	02
MS21042-08	27-20-05-02	-025	02
MS21042-08	27-21-00-01	-008	02
MS21042-08	27-30-05-01	-007	01
MS21042-08	27-30-05-01	-012	02
MS21042-08	27-30-05-01	-018	02
MS21042-08	27-30-05-01	-091	02
MS21042-08	27-30-05-01	-229	01
MS21042-08	27-35-00-01	-087	01
MS21042-08	27-36-00-01	-020	02
MS21042-08	27-36-00-01	-182	01
MS21042-08	27-60-20-01	-092	03
MS21042-08	30-13-10-01	-103	03
MS21042-08	31-30-00-01	-019	01
MS21042-08	32-35-00-01	-030	04
MS21042-08	52-10-11-01	-161	02
MS21042-08	52-40-01-01	-018	04
MS21042-08	52-40-11-01	-009	04
MS21042-08	52-40-37-01	-038	04
MS21042-08	53-30-03-02	-027	04
MS21042-08	55-30-00-04	-119	02
MS21042-08	55-30-00-04	-160	02
MS21042-08	56-20-00-01	-004	24
MS21042-08	57-60-00-03	-006	02
MS21042-3	21-23-00-01	-154	01
MS21042-3	21-23-00-01	-163	01
MS21042-3	21-23-00-01	-169	01
MS21042-3	21-23-00-01	-174	01
MS21042-3	21-35-00-01	-021	01
MS21042-3	24-20-00-01	-013	02
MS21042-3	24-20-00-01	-015	01
MS21042-3	24-30-00-01	-019	02
MS21042-3	24-35-00-01	-078	01
MS21042-3	24-35-00-01	-087	01
MS21042-3	26-10-00-01	-018	02
MS21042-3	26-11-00-01	-004	01
MS21042-3	26-11-00-01	-012	01
MS21042-3	27-10-15-01	-154	01
MS21042-3	27-10-15-01	-230	04
MS21042-3	27-10-15-01	-234	02
MS21042-3	27-10-15-01	-244	02
MS21042-3	27-10-15-01	-249	02
MS21042-3	27-10-50-01	-013	03
MS21042-3	27-10-50-01	-097	04
MS21042-3	27-10-50-01	-116	04
MS21042-3	27-10-50-01	-218	03
MS21042-3	27-10-50-01	-317	02
MS21042-3	27-10-50-02	-080	08
MS21042-3	27-10-50-02	-083	02
MS21042-3	27-10-50-02	-089	06
MS21042-3	27-10-50-02	-163	14
MS21042-3	27-10-50-02	-174	02
MS21042-3	27-10-50-02	-179	08
MS21042-3	27-11-00-01	-031	01
MS21042-3	27-13-00-01	-028	02
MS21042-3	27-13-00-01	-083	02
MS21042-3	27-13-00-01	-230	01
MS21042-3	27-20-00-01	-086	01
MS21042-3	27-21-00-01	-026	03
MS21042-3	27-24-05-01	-014	02
MS21042-3	27-25-00-01	-004	08

© Cessna Aircraft Company

PART NUMBER	CH SEC SUBJ FIG	ITEM	REQ	PART NUMBER	CH SEC SUBJ FIG	ITEM	REQ
MS21042-3	27-25-00-01	-101	02	MS21042-3	36-15-00-03	-103	06
MS21042-3	27-25-00-01	-174	02	MS21042-3	37-10-00-01	-094	01
MS21042-3	27-25-00-01	-226	03	MS21042-3	37-10-00-01	-098	01
MS21042-3	27-25-00-01	-241	03	MS21042-3	37-10-00-01	-105	01
MS21042-3	27-25-00-01	-245	02	MS21042-3	37-10-00-01	-110	01
MS21042-3	27-25-00-02	-004	02	MS21042-3	49-10-00-01	-015	01
MS21042-3	27-32-00-01	-097	03	MS21042-3	49-10-15-01	-004	16
MS21042-3	27-35-00-01	-018	02	MS21042-3	49-30-00-01	-008	02
MS21042-3	27-35-00-01	-027	01	MS21042-3	52-10-03-01	-004	04
MS21042-3	27-36-00-01	-016	01	MS21042-3	52-10-11-01	-155	06
MS21042-3	27-50-00-01	-007	01	MS21042-3	52-10-13-01	-017	06
MS21042-3	27-50-00-01	-016	01	MS21042-3	52-10-13-01	-030	02
MS21042-3	28-20-05-01	-033	01	MS21042-3	52-10-22-01	-011	04
MS21042-3	29-10-10-01	-091	04	MS21042-3	52-10-22-01	-084	04
MS21042-3	29-10-10-01	-237	13	MS21042-3	52-10-22-01	-160	04
MS21042-3	29-10-10-01	-243	01	MS21042-3	52-10-22-01	-231	02
MS21042-3	29-10-80-01	-155	01	MS21042-3	52-10-22-02	-012	01
MS21042-3	29-10-80-01	-165	01	MS21042-3	52-30-00-01	-028	01
MS21042-3	29-10-80-01	-172	01	MS21042-3	52-40-01-01	-005	02
MS21042-3	32-20-00-02	-005	02	MS21042-3	52-40-11-01	-022	01
MS21042-3	32-20-00-02	-015	02	MS21042-3	52-40-25-01	-013	01
MS21042-3	32-20-00-02	-023	02	MS21042-3	52-40-37-01	-008	01
MS21042-3	32-20-00-02	-082	02	MS21042-3	52-40-37-01	-018	01
MS21042-3	32-20-00-02	-089	02	MS21042-3	52-40-37-01	-087	02
MS21042-3	32-20-00-02	-107	04	MS21042-3	52-40-37-01	-157	01
MS21042-3	32-35-00-01	-013	04	MS21042-3	52-40-37-01	-167	01
MS21042-3	32-43-00-01	-042	04	MS21042-3	52-40-37-01	-235	02
MS21042-3	32-43-00-01	-082	01	MS21042-3	52-40-51-01	-015	01
MS21042-3	32-43-00-01	-089	01	MS21042-3	52-40-51-01	-034	01
MS21042-3	32-49-00-01	-020D	01	MS21042-3	53-23-00-03	-016	01
MS21042-3	33-40-35-01	-012	02	MS21042-3	53-30-02-01	-021	02
MS21042-3	34-10-00-02	-019	01	MS21042-3	53-30-03-04	-088	01
MS21042-3	34-10-00-02	-032	01	MS21042-3	71-10-00-01	-262	01
MS21042-3	34-10-00-02	-099	01	MS21042-3	71-70-00-01	-011	01
MS21042-3	34-10-00-02	-108	01	MS21042-3	71-70-00-01	-026	01
MS21042-3	34-10-00-02	-227	01	MS21042-3	73-10-00-01	-012	01
MS21042-3	34-10-00-02	-232	01	MS21042-3	73-10-00-01	-017	02
MS21042-3	34-47-05-01	-011	01	MS21042-3	73-10-00-01	-043	03
MS21042-3	35-10-00-01	-081	01	MS21042-3	73-10-00-02	-011	10
MS21042-3	35-10-00-01	-086	01	MS21042-3	73-10-00-02	-015	01
MS21042-3	35-10-00-01	-093	01	MS21042-3	73-30-00-01	-005	03
MS21042-3	35-10-00-01	-097	01	MS21042-4	27-20-00-01	-087	01
MS21042-3	35-10-00-01	-100	01	MS21042-4	27-21-00-01	-019	04
MS21042-3	35-10-00-01	-104	01	MS21042-4	27-25-00-01	-231	04
MS21042-3	35-10-00-01	-108	01	MS21042-4	27-36-00-01	-087	08
MS21042-3	35-10-00-01	-113	01	MS21042-4	32-35-00-02	-025	01
MS21042-3	35-10-20-01	-039	01	MS21042-4	52-10-11-01	-080	07
MS21042-3	35-10-20-01	-045	01	MS21042-4	52-10-11-01	-175	01
MS21042-3	35-10-20-01	-084	04	MS21042-4	52-10-22-01	-005	04
MS21042-3	35-10-20-01	-114	01	MS21042-4	52-10-22-01	-079	03
MS21042-3	35-10-20-01	-122	02	MS21042-4	52-10-22-01	-154	03
MS21042-3	35-10-20-01	-129	04	MS21042-4	52-10-22-02	-186	01
MS21042-3	35-10-20-01	-180	01	MS21042-4	52-10-22-02	-242	01
MS21042-3	35-20-00-01	-019	01	MS21042-4	52-10-22-02	-246	01
MS21042-3	35-20-00-01	-027	01	MS21042-4	52-10-22-02	-415	04
MS21042-3	35-20-00-01	-032	01	MS21042-4	53-10-10-01	-034	01
MS21042-3	36-15-00-01	-046	04	MS21042-4	71-10-00-01	-005	34
MS21042-3	36-15-00-01	-095	11	MS21042-4	71-10-00-01	-268	02
MS21042-3	36-15-00-02	-046	04	MS21042-5	24-60-15-01	-016	27
MS21042-3	36-15-00-02	-174	05	MS21042-5	29-10-10-01	-003	04
MS21042-3	36-15-00-03	-017	02	MS21042-5	29-10-10-01	-152	04
MS21042-3	36-15-00-03	-042	02	MS21042-5	52-10-22-02	-379	01

© Cessna Aircraft Company

PART NUMBER	CH SEC SUBJ FIG	ITEM	REQ	PART NUMBER	CH SEC SUBJ FIG	ITEM	REQ
MS21042-5	73-10-00-01	-029	04	MS21042L3	30-10-00-02	-010	01
MS21042-5	73-10-00-02	-032	04	MS21042L3	30-10-00-02	-161	02
MS21042-6	24-20-00-01	-005	06	MS21042L3	30-10-00-02	-166	02
MS21042-6	24-30-00-01	-012	06	MS21042L3	30-13-00-01	-013	01
MS21042-6	24-30-00-01	-035	01	MS21042L3	30-13-10-01	-006	04
MS21042-6	24-35-00-01	-004	06	MS21042L3	30-13-10-01	-010	02
MS21042-6	27-25-00-01	-095	01	MS21042L3	30-13-10-01	-031	02
MS21042-6	27-36-00-01	-077	02	MS21042L3	30-20-00-02	-008	02
MS21042L04	27-50-00-01	-098	02	MS21042L3	32-35-00-02	-033	01
MS21042L06	21-50-00-01	-028	01	MS21042L3	32-51-00-01	-043	01
MS21042L06	30-10-00-02	-177	01	MS21042L3	32-51-35-01	-010	02
MS21042L06	30-10-20-01	-029	02	MS21042L3	32-51-35-01	-016	04
MS21042L06	30-13-10-01	-095	01	MS21042L3	36-10-20-02	-086	01
MS21042L06	30-20-00-01	-016	01	MS21042L3	36-10-20-03	-011	02
MS21042L06	33-40-15-01	-027	03	MS21042L3	36-10-20-03	-086	02
MS21042L06	52-40-37-01	-080	08	MS21042L3	36-10-20-03	-100	03
MS21042L06	52-40-37-01	-228	08	MS21042L3	36-10-20-04	-032	01
MS21042L08	24-60-10-01	-183	04	MS21042L3	36-10-20-04	-093	01
MS21042L08	24-60-10-02	-183	04	MS21042L3	36-13-00-01	-014	01
MS21042L08	24-60-15-01	-184	02	MS21042L3	52-10-03-01	-156	01
MS21042L08	24-60-15-01	-257	02	MS21042L3	52-10-21-01	-157	01
MS21042L08	27-10-15-01	-179	03	MS21042L3	52-10-37-01	-009	04
MS21042L08	27-10-50-01	-038	02	MS21042L3	52-10-37-01	-015	02
MS21042L08	33-40-15-01	-013	01	MS21042L3	52-10-37-01	-025	01
MS21042L08	33-40-50-01	-006	06	MS21042L3	52-10-37-01	-079	04
MS21042L08	35-10-20-01	-094	03	MS21042L3	52-10-37-01	-105	02
MS21042L08	52-40-37-01	-026	01	MS21042L3	52-30-20-01	-011	02
MS21042L08	52-40-37-01	-175	01	MS21042L3	55-10-00-01	-035	01
MS21042L08	52-40-37-01	-187	04	MS21042L3	55-30-00-02	-153	04
MS21042L08	53-20-02-01	-087	02	MS21042L3	55-30-00-02	-175	04
MS21042L08	53-20-02-01	-093	02	MS21042L3	55-30-00-02	-198	06
MS21042L08	53-20-02-01	-096	08	MS21042L3	55-30-00-02	-232	06
MS21042L08	53-20-02-01	-106	11	MS21042L3	55-30-00-02	-241	06
MS21042L08	53-20-02-01	-109	16	MS21042L3	71-70-00-01	-034	02
MS21042L3	21-21-00-01	-011	01	MS21042L3	80-10-00-01	-169	02
MS21042L3	21-21-00-01	-039	06	MS21042L3	80-10-00-01	-177	01
MS21042L3	21-23-00-01	-010	01	MS21042L4	32-10-00-01	-006	01
MS21042L3	21-23-00-01	-082	02	MS21042L4	32-51-00-01	-017	01
MS21042L3	21-23-00-01	-092	02	MS21042L4	32-51-00-01	-021	01
MS21042L3	21-25-00-01	-008	01	MS21042L4	32-51-00-01	-025	01
MS21042L3	21-25-00-01	-091	01	MS21042L4	32-51-00-01	-038	02
MS21042L3	21-25-00-01	-097	01	MS21042L4	32-51-35-01	-021	01
MS21042L3	21-27-00-01	-004	08	MS21042L4	52-10-35-01	-023	02
MS21042L3	21-50-05-01	-006	02	MS21042L4	52-10-35-01	-027	01
MS21042L3	21-50-05-01	-011	02	MS21042L4	52-10-37-01	-108	02
MS21042L3	21-50-05-01	-016	08	MS21042L4	53-15-00-02	-017	03
MS21042L3	21-50-10-01	-007	14	MS21042L5	52-10-22-02	-006	02
MS21042L3	21-50-10-01	-038	08	MS21042L5	52-10-22-02	-017	01
MS21042L3	21-50-20-01	-008	02	MS21042L5	52-10-22-02	-037	01
MS21042L3	27-13-00-01	-010	01	MS21042L5	53-15-00-02	-018	05
MS21042L3	27-13-00-01	-088	01	MS21042L6	27-20-00-01	-022	01
MS21042L3	27-35-00-02	-026	02	MS21042L6	52-10-19-01	-174	02
MS21042L3	27-37-00-01	-005	02	MS21043-06	28-11-40-01	-018	02
MS21042L3	27-60-00-01	-011	04	MS21043-06	34-55-00-01	-013	01
MS21042L3	27-60-00-01	-018	02	MS21043-06	57-60-00-02	-031	AR
MS21042L3	27-60-20-01	-156	04	MS21043-08	27-40-00-01	-031	01
MS21042L3	28-11-10-01	-166	01	MS21043-08	71-10-00-01	-245	02
MS21042L3	28-11-30-01	-018	01	MS21043-3	21-26-00-01	-035	01
MS21042L3	28-11-30-01	-032	01	MS21043-3	21-26-00-01	-035A	02
MS21042L3	28-20-00-01	-008	01	MS21043-3	24-30-30-01	-017	01
MS21042L3	30-10-00-01	-016	02	MS21043-3	27-10-50-01	-003	03
MS21042L3	30-10-00-01	-094	04	MS21043-3	27-10-50-01	-008	03

© Cessna Aircraft Company

PART NUMBER	CH SEC SUBJ FIG	ITEM	REQ	PART NUMBER	CH SEC SUBJ FIG	ITEM	REQ
MS21043-3	28-11-10-01	-023	01	MS21044C08	25-50-00-01	-085	02
MS21043-3	28-11-10-01	-088	01	MS21044C08	32-30-00-02	-126	01
MS21043-3	28-11-10-01	-154	01	MS21044C08	32-49-00-01	-096	04
MS21043-3	28-11-20-01	-016	01	MS21044C3	27-80-00-01	-011	01
MS21043-3	28-11-20-01	-031	02	MS21044C3	29-10-00-04	-102	02
MS21043-3	28-11-20-01	-092	01	MS21044C3	29-10-00-05	-008	01
MS21043-3	28-11-20-01	-157	01	MS21044C3	29-10-00-05	-018	02
MS21043-3	28-11-20-01	-181	20	MS21044C3	29-10-00-05	-022	01
MS21043-3	28-11-30-01	-006	01	MS21044C3	29-10-00-05	-026	01
MS21043-3	28-11-40-01	-014	02	MS21044C3	29-10-00-05	-030	01
MS21043-3	28-11-40-01	-081	02	MS21044C3	29-10-00-05	-032	02
MS21043-3	28-11-40-01	-086	02	MS21044C3	29-10-00-05	-082	01
MS21043-3	28-11-40-01	-090	02	MS21044C3	29-10-00-05	-094	01
MS21043-3	28-11-40-01	-096	02	MS21044C3	29-10-00-05	-099	01
MS21043-3	28-20-00-02	-079	01	MS21044C3	29-10-00-05	-104	02
MS21043-3	28-20-00-02	-124	01	MS21044C3	29-10-00-05	-111	01
MS21043-3	28-20-00-03	-089	04	MS21044C3	29-10-00-05	-193	02
MS21043-3	28-20-00-03	-180	02	MS21044C3	29-10-00-05	-246	01
MS21043-3	28-20-20-01	-004	04	MS21044C3	29-10-00-06	-042	02
MS21043-3	28-20-20-01	-015	04	MS21044C3	29-10-00-06	-197	01
MS21043-3	28-20-21-01	-010	01	MS21044C3	29-10-00-08	-019	01
MS21043-3	28-20-21-01	-093	01	MS21044C3	29-10-00-08	-060	01
MS21043-3	28-20-21-01	-098	01	MS21044C3	29-10-00-08	-080	03
MS21043-3	28-20-30-01	-013	04	MS21044C3	29-10-00-09	-081	AR
MS21043-3	28-20-30-01	-028	04	MS21044C3	29-10-00-09	-093	AR
MS21043-3	28-20-30-01	-088	04	MS21044C3	29-10-00-10	-017	01
MS21043-3	28-21-00-01	-023	01	MS21044C3	29-10-00-10	-078	02
MS21043-3	28-21-00-02	-154	04	MS21044C3	29-10-00-10	-098	02
MS21043-3	28-21-00-02	-185	01	MS21044C3	29-10-00-10	-193	01
MS21043-3	28-21-00-02	-191	01	MS21044C3	29-10-00-11	-087	01
MS21043-3	28-21-00-02	-229	01	MS21044C3	29-10-00-11	-092	02
MS21043-3	28-21-00-02	-262	03	MS21044C3	29-10-00-11	-104	01
MS21043-3	28-21-00-02	-332	01	MS21044C3	29-10-00-11	-110	01
MS21043-3	28-23-00-01	-016	04	MS21044C3	29-10-00-11	-157	01
MS21043-3	29-10-80-01	-100	01	MS21044C3	29-10-00-11	-174	01
MS21043-3	30-13-10-01	-018	02	MS21044C3	29-10-00-11	-180	01
MS21043-3	30-13-10-01	-078	04	MS21044C3	29-10-00-11	-185	01
MS21043-3	30-13-10-01	-083	02	MS21044C3	29-10-00-11	-232	01
MS21043-3	30-20-00-01	-029	01	MS21044C3	29-10-00-11	-236	01
MS21043-3	36-10-20-01	-035	04	MS21044C3	29-10-00-12	-029	02
MS21043-3	36-15-00-02	-045	05	MS21044C3	29-10-00-12	-162	04
MS21043-3	49-80-00-01	-016	01	MS21044C3	29-10-00-12	-239	04
MS21043-3	52-10-03-01	-152	01	MS21044C3	29-10-00-12	-306	06
MS21043-3	52-10-35-01	-089	02	MS21044C3	29-10-00-12	-321	04
MS21043-3	52-40-45-01	-004	02	MS21044C3	29-10-80-01	-027	01
MS21043-3	55-20-00-01	-088	15	MS21044C3	29-10-80-01	-032	01
MS21043-3	55-20-00-01	-092	24	MS21044C3	29-23-00-01	-015	02
MS21043-3	55-20-00-01	-096	19	MS21044C3	29-23-00-01	-098	01
MS21043-3	57-70-00-02	-006	02	MS21044C3	29-23-00-01	-166	01
MS21043-3	57-70-00-02	-110	01	MS21044C3	29-23-00-01	-170	01
MS21043-3	71-10-00-01	-175	01	MS21044C3	29-23-00-01	-243	01
MS21043-3	71-10-00-01	-253	02	MS21044C3	29-23-00-01	-318	01
MS21043-4	28-21-00-02	-237	04	MS21044C3	32-30-00-02	-026	02
MS21043-4	36-10-20-04	-017	03	MS21044C3	32-30-00-02	-120	01
MS21043-4	53-20-03-01	-009	02	MS21044C3	32-30-00-02	-190	02
MS21043-4	55-20-00-01	-100	02	MS21044C3	32-30-00-03	-092	01
MS21043-4	57-40-10-01	-312	16	MS21044C3	32-33-00-01	-006	02
MS21043-4	71-10-00-01	-172	08	MS21044C3	32-33-00-01	-010	01
MS21043-5	28-21-00-01	-036	04	MS21044C3	32-33-00-01	-015	01
MS21043-5	28-21-00-02	-159	04	MS21044C3	32-33-00-01	-025	01
MS21043-5	57-40-10-01	-309	16	MS21044C3	32-33-00-01	-167	03
MS21044C08	21-60-00-01	-157	02	MS21044C3	32-33-00-01	-305	02

© Cessna Aircraft Company

PART NUMBER	CH SEC SUBJ FIG	ITEM	REQ	PART NUMBER	CH SEC SUBJ FIG	ITEM	REQ
MS21044C3	32-33-00-01	-393	07	MS21044N3	32-33-00-01	-239	03
MS21044C3	32-33-05-01	-004	02	MS21044N3	52-40-01-01	-011	02
MS21044C3	32-35-00-01	-090	02	MS21044N3	52-40-01-01	-014	02
MS21044C3	32-43-00-01	-164	01	MS21044N3	52-40-37-01	-015	03
MS21044C3	32-43-00-02	-084	01	MS21044N3	52-40-37-01	-164	03
MS21044C3	32-43-00-02	-197	06	MS21044N3	56-13-00-01	-005	50
MS21044C3	32-43-00-02	-247	01	MS21044N3	57-60-00-01	-081	02
MS21044C3	32-43-00-02	-252	01	MS21044N4	27-25-00-01	-082	01
MS21044C3	32-43-00-02	-265	01	MS21044N4	27-25-00-01	-182	01
MS21044C3	32-45-00-01	-011	02	MS21044N4	27-25-00-01	-238	01
MS21044C3	32-45-00-01	-021	01	MS21044N4	27-25-00-01	-342	01
MS21044C3	32-47-00-01	-027	02	MS21044N4	27-60-00-01	-094	02
MS21044C3	32-49-00-01	-004	01	MS21044N4	32-10-30-01	-006	04
MS21044C3	32-49-00-01	-036	01	MS21044N4	32-70-00-01	-005	28
MS21044C3	32-49-00-02	-025	04	MS21044N4	34-43-00-01	-006	04
MS21044C3	32-49-00-02	-093	02	MS21044N4	35-10-20-01	-003	02
MS21044C3	32-49-00-03	-007	01	MS21044N5	25-10-01-01	-006	01
MS21044C3	32-49-00-03	-018	01	MS21044N5	55-10-00-01	-109	02
MS21044C3	32-49-00-03	-092	01	MS21045-08	30-13-10-01	-106	02
MS21044C3	32-50-25-01	-005	01	MS21045C3	32-20-00-01	-014	04
MS21044C3	32-51-00-01	-121	01	MS21045C4	28-11-55-01	-078	02
MS21044C3	32-51-05-01	-023	01	MS21045C4	71-00-00-01	-014	02
MS21044C3	32-51-05-01	-101	01	MS21045L04	21-25-20-01	-019	02
MS21044C3	32-51-25-01	-005	01	MS21045L3	30-40-00-01A	-008	01
MS21044C3	38-30-15-01	-020	08	MS21045L3	31-30-00-01	-016	01
MS21044C3	78-30-10-01	-104	01	MS21045L3	53-23-00-03A	-007	01
MS21044C3	78-30-10-02	-024	01	MS21045L3	53-23-00-03A	-023	01
MS21044C7	56-15-00-01	-079	01	MS21045L4	33-50-00-01	-008	01
MS21044D08	27-10-50-01	-232	01	MS21045L5	52-10-35-01	-086	01
MS21044D08	27-21-00-01	-035	01	MS21045L5	53-60-00-01	-021	01
MS21044D08	27-32-00-01	-165	02	MS21045L5	53-60-00-06	-021	01
MS21044D08	53-60-00-07	-015	01	MS21045L6	24-30-30-01	-089	01
MS21044D08	53-60-00-07	-177	01	MS21047-06	33-40-10-01	-005	02
MS21044D08	53-60-00-07	-260	01	MS21047-06	33-40-10-01	-007	02
MS21044D08	53-60-00-07	-316	01	MS21047-08	27-40-00-01	-099	08
MS21044D08	53-60-05-03	-016	01	MS21047-08	27-40-00-01	-105	02
MS21044N04	35-20-10-01	-008	01	MS21047-3	21-35-00-01	-025	06
MS21044N04	35-20-10-01	-014	01	MS21047-4	32-31-05-01	-006	02
MS21044N06	27-11-20-01	-008	01	MS21047-4	76-12-00-01	-002	04
MS21044N06	27-11-20-01	-026	01	MS21047L06	27-40-00-01	-084	04
MS21044N06	27-40-00-01	-080	06	MS21047L06	31-32-10-01	-004	02
MS21044N08	21-23-25-01	-005	04	MS21047L08	24-30-00-01	-025	04
MS21044N08	22-10-10-01	-048	03	MS21047L08	24-30-00-01	-028	02
MS21044N08	22-10-10-02	-036	03	MS21047L08	33-30-20-01	-017	02
MS21044N08	27-10-30-01	-320	02	MS21047L08	33-30-20-01	-019	02
MS21044N08	27-20-05-02	-005	01	MS21047L08	53-10-00-02	-003	03
MS21044N08	27-32-00-01	-081	03	MS21047L08	53-10-00-02	-077	03
MS21044N08	27-35-00-02	-012	01	MS21047L08	53-60-02-01	-017	06
MS21044N08	34-60-00-01	-094	01	MS21047L08	55-30-00-03	-020	04
MS21044N08	56-15-00-01	-096	04	MS21047L08	55-30-00-03	-095	04
MS21044N3	24-35-00-01	-095	02	MS21047L08K	34-50-05-01	-009	08
MS21044N3	25-50-15-01	-005	02	MS21047L3	27-36-00-01	-189	03
MS21044N3	25-60-00-01	-020	01	MS21047L3	32-43-00-02	-171	02
MS21044N3	27-10-30-01	-228	03	MS21047L3	52-20-00-01	-008	02
MS21044N3	27-10-30-01	-234	02	MS21047L3	52-30-00-01	-034	01
MS21044N3	27-25-00-01	-078	01	MS21047L3	53-20-00-02	-012	36
MS21044N3	27-25-00-01	-234	01	MS21047L3	53-20-00-06	-082	01
MS21044N3	27-25-00-01	-302	02	MS21047L3	53-20-00-13	-004	07
MS21044N3	27-25-00-01	-338	01	MS21047L3	53-30-03-02	-040	28
MS21044N3	29-10-00-07	-166	01	MS21047L3	53-60-05-01	-007	01
MS21044N3	30-40-00-01A	-017	01	MS21047L3	53-60-05-01	-014	01
MS21044N3	32-30-30-01	-015	01	MS21047L5	53-60-01-12	-011	02

© Cessna Aircraft Company

PART NUMBER	CH SEC SUBJ FIG	ITEM	REQ
MS21048-06	35-20-15-01	-003	04
MS21048-06	53-20-05-01	-033	08
MS21048-08	54-60-00-01	-161	08
MS21048-08	71-60-00-01	-019	08
MS21048-08	71-60-00-01	-024	08
MS21048-3	71-60-00-01	-033	02
MS21048L04	31-10-15-01	-008	02
MS21048L04	31-10-50-01	-005	02
MS21048L06	33-40-17-01	-008	02
MS21048L06	33-40-17-01	-011	02
MS21048L06	34-21-10-01	-004	03
MS21048L06	34-21-10-01	-006	03
MS21048L06	34-21-10-01	-008	03
MS21048L08	54-60-00-01	-078	08
MS21049-3	32-35-00-02	-015	01
MS21051-08	52-10-31-01	-017	01
MS21051-3	53-20-00-06	-095	02
MS21051L08	34-57-00-01	-011	02
MS21051L3	27-36-00-01	-190	01
MS21051L3	34-57-00-01	-012	02
MS21051L3	34-57-00-01	-020	02
MS21051L3	53-20-00-02	-013	26
MS21051L5	55-10-00-02	-169	01
MS21051L5	55-10-00-02	-185	01
MS21052L3	57-00-05-01	-165	08
MS21053L08	30-43-05-01	-009	02
MS21053L08	30-43-05-01	-012	02
MS21054-3	28-11-20-01	-177	03
MS21055L08	71-60-00-01	-030	04
MS21055L08K	53-30-02-03	-096	02
MS21055L3	32-51-05-01	-007	02
MS21055L3	52-30-20-01	-078	04
MS21055L3	53-50-00-02	-178	04
MS21055L3	53-50-00-02	-182	04
MS21055L3	53-60-00-05	-007	01
MS21055L4	27-36-00-01	-191	04
MS21056-3	52-10-37-01	-099	04
MS21056L08	28-21-00-03	-101	03
MS21056L08K	53-30-02-04	-010	02
MS21056L3	53-42-01-01	-079	08
MS21056L3	53-42-04-03	-029	04
MS21056L3	53-50-00-01	-085	02
MS21056L3	53-50-00-01	-088	02
MS21056L3	53-50-00-01	-095	02
MS21056L3	53-50-00-01	-098	02
MS21056L3	53-50-00-02	-008	AR
MS21056L3	53-50-00-02	-036	AR
MS21057L3	53-21-00-01	-110	03
MS21059-08	31-40-05-01	-010	04
MS21059-08	33-50-05-01	-011	04
MS21059-08	53-20-05-01	-004	02
MS21059-08	53-43-00-01	-038	03
MS21059-08	55-10-00-01	-081	AR
MS21059-08	55-10-00-01	-085	06
MS21059-08	55-10-00-02	-045	06
MS21059-08	55-10-00-02	-410	08
MS21059-3	31-40-10-01	-008	04
MS21059-3	34-40-00-01	-008	08
MS21059-3	55-10-00-03	-019	04
MS21059-3	55-10-00-03	-030	01
MS21059L06	55-40-00-01	-017	18
MS21059L08	21-35-00-01	-093	04
MS21059L08	31-20-00-01	-004	03
MS21059L08	36-10-20-04	-022	02
MS21059L08	53-20-03-03	-018	02
MS21059L08	53-21-00-01	-010	06
MS21059L08	53-21-00-01	-015	22
MS21059L08	53-21-00-01	-107	08
MS21059L08	53-21-00-02	-079	05
MS21059L08	54-60-00-01	-156	21
MS21059L08	55-10-00-01	-186	26
MS21059L08K	49-10-15-01	-010	04
MS21059L3	22-10-30-01	-012	04
MS21059L3	22-10-30-01	-014	02
MS21059L3	23-11-20-01	-004	06
MS21059L3	24-20-20-01	-006	02
MS21059L3	28-11-20-01	-100	03
MS21059L3	32-35-00-02	-029	01
MS21059L3	32-35-00-02	-046	02
MS21059L3	52-10-09-01	-027	02
MS21059L3	53-20-00-04	-040	16
MS21059L3	53-20-00-08	-027	01
MS21059L3	53-20-00-08	-030	01
MS21059L3	53-20-00-08	-033	06
MS21059L3	53-20-00-11	-012	02
MS21059L3	53-20-00-11	-031	04
MS21059L3	53-50-00-02	-010	AR
MS21059L3	53-50-00-02	-179	22
MS21059L3	53-50-00-02	-183	20
MS21059L3	55-10-00-01	-182	54
MS21059L3	55-10-00-02	-171	06
MS21059L3	55-10-00-02	-194	10
MS21059L3	55-10-00-02	-232	08
MS21059L3	55-40-00-01	-025	04
MS21059L3	55-40-00-01	-092	02
MS21059L3	57-00-05-01	-160	32
MS21059L3	57-00-05-01	-164	24
MS21059L3	57-51-00-02	-015	04
MS21059L3	57-51-00-02	-029	04
MS21059L3	57-70-00-02	-011	02
MS21059L3	57-70-00-02	-015	02
MS21059L3	57-70-00-02	-083	01
MS21059L4	24-20-20-01	-010	02
MS21059L4	26-20-15-01	-012	12
MS21059L4	52-20-00-01	-018	01
MS21060-08	54-50-00-01	-100	12
MS21060-08K	71-60-00-01	-015	02
MS21060-3	21-30-00-01	-004	04
MS21060-3	27-36-00-01	-194	08
MS21060-3	53-20-00-02	-010	05
MS21060-3	53-20-00-03	-008	01
MS21060-3	53-20-00-05	-017	01
MS21060-3	53-20-00-06	-010	01
MS21060-3	53-20-00-06	-085	02
MS21060-3	53-20-00-06	-090	02
MS21060-3	53-20-00-07	-012	01
MS21060-3	53-20-03-04	-009	02
MS21060-3	53-20-05-01	-021	04
MS21060-3	53-20-05-01	-031	02
MS21060-3	53-42-03-01	-020	21
MS21060-3	53-42-04-03	-028	67
MS21060-3	53-50-00-02	-174	AR
MS21060-3	54-50-00-01	-102	04
MS21060L06	30-10-20-01	-034	01

© Cessna Aircraft Company

PART NUMBER	CH SEC SUBJ FIG	ITEM	REQ
MS21060L06	53-42-02-01	-006	10
MS21060L06	53-42-04-04	-009	06
MS21060L08	23-15-00-01	-085	06
MS21060L08	28-21-00-02	-306	03
MS21060L08	31-40-05-01	-005	16
MS21060L08	52-40-37-01	-042	02
MS21060L08	52-40-37-01	-191	02
MS21060L08K	54-50-00-01	-086	04
MS21060L3	21-27-00-01	-009	18
MS21060L3	28-11-20-01	-104	06
MS21060L3	28-23-00-01	-029	03
MS21060L3	29-10-00-04	-033	01
MS21060L3	29-10-00-06	-050	01
MS21060L3	29-10-00-06	-198	03
MS21060L3	29-23-05-01	-007	04
MS21060L3	30-10-15-01	-005	AR
MS21060L3	32-20-00-02	-161	04
MS21060L3	32-33-00-01	-174	01
MS21060L3	32-45-00-01	-015	01
MS21060L3	32-49-00-02	-026	01
MS21060L3	33-50-05-01	-008	02
MS21060L3	34-40-00-01	-019	04
MS21060L3	34-55-10-01	-005	04
MS21060L3	34-57-00-01	-087	04
MS21060L3	36-15-00-02	-048	01
MS21060L3	38-30-15-01	-027	04
MS21060L3	38-30-15-01	-029	08
MS21060L3	52-10-19-01	-041	02
MS21060L3	53-10-01-01	-028	01
MS21060L3	53-15-00-02	-172	01
MS21060L3	53-15-00-02	-174	01
MS21060L3	53-20-00-07	-035	34
MS21060L3	53-20-00-08	-050	24
MS21060L3	53-20-00-09	-031	30
MS21060L3	53-20-00-10	-092	55
MS21060L3	53-20-00-12	-038	16
MS21060L3	53-20-00-13	-005	46
MS21060L3	53-20-00-13	-094	AR
MS21060L3	53-20-02-07	-026	04
MS21060L3	53-20-03-03	-006	25
MS21060L3	53-21-00-01	-111	05
MS21060L3	53-21-00-01	-182	02
MS21060L3	53-21-00-01	-187	05
MS21060L3	53-22-00-01	-099	23
MS21060L3	53-22-00-02	-042	44
MS21060L3	53-22-00-02	-091	21
MS21060L3	53-30-00-01	-004	14
MS21060L3	53-30-00-01	-008	18
MS21060L3	53-30-03-04	-014	AR
MS21060L3	53-30-03-05	-014	AR
MS21060L3	53-30-03-05	-023	AR
MS21060L3	53-30-06-02	-089	22
MS21060L3	53-30-06-02	-101	06
MS21060L3	53-38-00-01	-003	14
MS21060L3	53-38-00-01	-008	AR
MS21060L3	53-42-01-01	-081	82
MS21060L3	53-42-04-04	-010	28
MS21060L3	53-43-00-01	-043	107
MS21060L3	53-50-00-01	-003	07
MS21060L3	53-50-00-01	-007	AR
MS21060L3	53-50-00-01	-010	28
MS21060L3	53-50-00-01	-020	02
MS21060L3	53-50-00-01	-086	84
MS21060L3	53-50-00-01	-089	40
MS21060L3	53-50-00-01	-096	20
MS21060L3	53-50-00-01	-099	78
MS21060L3	53-50-00-01	-165	02
MS21060L3	53-50-00-01	-169	03
MS21060L3	53-50-00-01	-171	10
MS21060L3	53-50-00-01	-174	14
MS21060L3	53-50-00-01	-177	16
MS21060L3	53-50-00-02	-006	AR
MS21060L3	53-50-00-02	-012	22
MS21060L3	53-50-00-02	-016	12
MS21060L3	53-50-00-02	-025	AR
MS21060L3	53-50-00-02	-029	12
MS21060L3	53-50-00-02	-034	AR
MS21060L3	53-50-00-02	-039	12
MS21060L3	53-50-00-02	-043	16
MS21060L3	53-50-00-02	-077	04
MS21060L3	53-50-00-02	-084	04
MS21060L3	53-50-00-02	-093	08
MS21060L3	53-50-00-02	-101	02
MS21060L3	53-50-00-02	-108	37
MS21060L3	53-50-00-02	-112	04
MS21060L3	53-50-00-02	-154	AR
MS21060L3	53-50-00-02	-161	AR
MS21060L3	53-50-00-02	-168	AR
MS21060L3	53-50-00-02	-172	AR
MS21060L3	53-50-00-02	-189	AR
MS21060L3	53-50-00-02	-191	05
MS21060L3	53-50-00-03	-007	AR
MS21060L3	53-50-00-03	-011	AR
MS21060L3	53-60-00-01	-024	54
MS21060L3	53-60-00-02	-025	28
MS21060L3	53-60-00-03	-026	24
MS21060L3	53-60-00-04	-027	36
MS21060L3	57-10-00-01	-002	46
MS21060L3	57-10-00-01	-007	04
MS21060L3	57-10-00-01	-020	07
MS21060L3	57-10-00-01	-023	08
MS21060L3	57-10-00-01	-026	13
MS21060L3	57-10-00-01	-029	11
MS21060L3	57-10-00-01	-031	06
MS21060L3	57-10-00-01	-033	04
MS21060L3	57-10-00-01	-038	07
MS21060L3	57-10-00-01	-041	06
MS21060L3	57-20-00-08	-333	26
MS21060L3	57-21-01-01	-002	56
MS21060L3	57-40-00-01	-006	08
MS21060L3K	54-50-00-01	-088	04
MS21060L3K	54-60-00-01	-005	AR
MS21060L3K	54-60-00-01	-169	AR
MS21060L3K	54-60-00-01	-175	AR
MS21060L3K	54-60-00-01	-182	AR
MS21060L4	52-10-19-01	-040	02
MS21060L4	57-30-00-01	-014	46
MS21060L5	57-30-00-01	-012	04
MS21061-08	55-10-00-01	-082	08
MS21061-08	55-10-00-01	-086	02
MS21061-08	55-10-00-01	-088	02
MS21061-08	55-10-00-02	-046	02
MS21061-08	55-10-00-02	-051	02
MS21061-08	55-10-00-02	-411	04

© Cessna Aircraft Company

PART NUMBER	CH SEC SUBJ FIG	ITEM	REQ	PART NUMBER	CH SEC SUBJ FIG	ITEM	REQ
MS21061-3	53-10-10-01	-013	04	MS21069-08	53-23-00-03	-007	57
MS21061-3	53-38-00-01	-006	AR	MS21069-08	54-50-00-01	-199	04
MS21061-3	53-42-04-03	-030	06	MS21069-08	54-50-00-01	-205	04
MS21061-3	55-10-00-03	-018	01	MS21069-08	55-10-00-01	-157	01
MS21061-3	55-10-00-03	-026	02	MS21069-08	55-10-00-01	-245	01
MS21061-3	55-10-00-03	-029	04	MS21069-08	71-60-00-01	-018	34
MS21061-3	55-30-00-04	-246	02	MS21069-3	27-10-50-02	-195	06
MS21061L06	34-60-00-01	-084	02	MS21069-3	35-10-00-01	-088	01
MS21061L08	52-40-07-01	-019	01	MS21069-3	52-10-00-01	-153	AR
MS21061L08	53-43-00-01	-026	01	MS21069-3	52-10-00-01	-162	AR
MS21061L08	55-10-00-01	-185	04	MS21069-3	52-10-00-01	-165	05
MS21061L08K	49-10-15-01	-011	04	MS21069-3	52-10-00-01	-168	03
MS21061L3	29-23-00-01	-161	06	MS21069-3	52-10-11-01	-102	02
MS21061L3	29-23-00-01	-309	02	MS21069-3	52-10-11-01	-158	04
MS21061L3	29-23-00-01	-390	02	MS21069-3	52-10-11-01	-249	01
MS21061L3	29-23-05-01	-080	04	MS21069-3	52-10-22-01	-233	08
MS21061L3	32-45-00-01	-013	01	MS21069-3	52-10-22-02	-226	03
MS21061L3	53-20-00-07	-036	04	MS21069-3	52-10-22-02	-233	02
MS21061L3	53-20-00-08	-051	06	MS21069-3	52-10-22-02	-235	01
MS21061L3	53-20-00-09	-032	04	MS21069-3	53-10-10-01	-028	02
MS21061L3	53-20-00-10	-093	09	MS21069-3	53-20-00-12	-011	03
MS21061L3	53-20-00-12	-039	02	MS21069-3	77-30-00-01	-004	04
MS21061L3	53-21-00-01	-112	02	MS21069-4	24-60-00-01	-002	02
MS21061L3	53-21-00-01	-183	04	MS21069-4	24-60-00-01	-004	04
MS21061L3	53-21-00-01	-188	02	MS21069-4	24-60-00-01	-007	03
MS21061L3	53-22-00-01	-100	04	MS21069-4	24-60-00-01	-010	03
MS21061L3	53-22-00-02	-043	06	MS21069-4	52-10-11-01	-235	02
MS21061L3	53-22-00-02	-092	02	MS21069-4	52-10-22-01	-234	01
MS21061L3	53-30-00-01	-015	04	MS21069-4	52-10-35-01	-035	01
MS21061L3	53-30-00-01	-019	04	MS21069-4	53-10-10-01	-029	01
MS21061L3	53-30-00-01	-023	03	MS21069L04	23-50-20-01	-011	03
MS21061L3	53-30-00-01	-028	02	MS21069L04	24-60-05-01	-021	10
MS21061L3	53-42-01-01	-080	02	MS21069L04	24-60-05-02	-021	10
MS21061L3	53-42-01-01	-082	02	MS21069L04K	71-70-00-01	-030	04
MS21061L3	53-50-00-01	-004	02	MS21069L06	21-25-20-01	-038	04
MS21061L3	53-50-00-01	-008	AR	MS21069L06	23-15-00-01	-098	02
MS21061L3	53-50-00-01	-011	12	MS21069L06	23-50-20-01	-031	02
MS21061L3	53-50-00-02	-009	AR	MS21069L06	24-30-30-01	-029	02
MS21061L3	53-50-00-02	-020	02	MS21069L06	24-60-05-01	-009	03
MS21061L3	53-50-00-02	-095	04	MS21069L06	24-60-05-01	-028	08
MS21061L3	53-50-00-02	-110	06	MS21069L06	24-60-05-02	-009	03
MS21061L3	53-50-00-02	-156	AR	MS21069L06	24-60-05-02	-028	08
MS21061L3	55-10-00-01	-184	22	MS21069L06	27-36-00-01	-188	04
MS21061L3	55-10-00-02	-172	04	MS21069L08	21-29-00-01	-013	06
MS21061L3	55-10-00-02	-195	08	MS21069L08	23-13-00-01	-017	06
MS21061L3	57-20-01-21	-011	08	MS21069L08	23-13-00-01	-019	04
MS21061L3	57-51-00-02	-006	01	MS21069L08	23-13-00-01	-026	04
MS21061L3	57-51-00-02	-031	02	MS21069L08	23-13-00-01	-030	02
MS21061L3	57-70-00-02	-084	01	MS21069L08	23-13-00-01	-033	02
MS21061L4	29-23-00-01	-091	04	MS21069L08	23-13-00-01	-038	02
MS21061L4	29-23-00-01	-155	02	MS21069L08	23-13-00-01	-041	02
MS21061L4	32-43-10-01	-005	04	MS21069L08	23-15-05-01	-009	04
MS21061L4	52-20-00-01	-019	01	MS21069L08	23-15-05-01	-011	06
MS21062-08	28-21-00-03	-188	01	MS21069L08	24-20-25-01	-008	06
MS21062-3	28-21-00-03	-026	01	MS21069L08	24-20-25-01	-011	04
MS21062L08	28-21-00-02	-318	02	MS21069L08	24-60-05-01	-023	02
MS21062L3	53-30-03-05	-025	AR	MS21069L08	24-60-05-02	-023	02
MS21069-08	33-40-20-01	-008	02	MS21069L08	27-10-30-01	-473	04
MS21069-08	35-10-20-01	-110	05	MS21069L08	27-10-30-01	-480	04
MS21069-08	35-10-20-01	-162	02	MS21069L08	32-20-00-02	-095	01
MS21069-08	35-10-20-01	-176	01	MS21069L08	34-40-00-01	-006	17
MS21069-08	53-23-00-03	-006	01	MS21069L08	35-10-20-01	-108	02

© Cessna Aircraft Company

PART NUMBER	CH SEC SUBJ FIG	ITEM	REQ	PART NUMBER	CH SEC SUBJ FIG	ITEM	REQ
MS21069L08	38-30-00-01	-014	06	MS21069L3	52-10-21-01	-106	06
MS21069L08	52-20-10-01	-026	01	MS21069L3	52-10-22-02	-308	04
MS21069L08	52-40-15-01	-014	02	MS21069L3	52-10-22-02	-313	AR
MS21069L08	53-15-00-02	-035	14	MS21069L3	52-10-35-01	-082	04
MS21069L08	53-15-00-02	-100	15	MS21069L3	52-11-00-01	-027	03
MS21069L08	53-20-03-02	-011	16	MS21069L3	52-20-10-01	-024	04
MS21069L08	53-20-03-03	-013	11	MS21069L3	52-30-00-01	-003	02
MS21069L08	53-21-00-01	-043	01	MS21069L3	52-30-00-01	-008	AR
MS21069L08	53-21-00-01	-121	01	MS21069L3	52-30-20-01	-012	10
MS21069L08	53-21-00-01	-131	17	MS21069L3	53-12-15-01	-087	11
MS21069L08	53-21-00-01	-175	01	MS21069L3	53-12-15-01	-166	02
MS21069L08	53-21-00-01	-178	01	MS21069L3	53-15-00-02	-119	07
MS21069L08	53-21-00-02	-014	09	MS21069L3	53-15-00-02	-194	01
MS21069L08	53-21-00-02	-029	10	MS21069L3	53-15-00-02	-196	01
MS21069L08	53-21-00-02	-105	06	MS21069L3	53-15-00-02	-206	07
MS21069L08	53-21-00-02	-108	02	MS21069L3	53-20-00-03	-010	01
MS21069L08	53-21-00-02	-111	04	MS21069L3	53-20-00-05	-009	01
MS21069L08	53-30-02-03	-003	AR	MS21069L3	53-20-00-11	-032	01
MS21069L08	55-20-10-01	-013	02	MS21069L3	53-20-03-02	-021	03
MS21069L08	55-30-10-01	-017	16	MS21069L3	53-20-03-03	-012	02
MS21069L08	55-40-00-02	-005	02	MS21069L3	53-21-00-01	-024	02
MS21069L08	57-10-03-06	-008	02	MS21069L3	53-21-00-01	-026	03
MS21069L08	71-60-00-01	-004	AR	MS21069L3	53-21-00-01	-028	03
MS21069L08	71-60-00-01	-007	AR	MS21069L3	53-21-00-01	-031	03
MS21069L08K	49-10-15-01	-009	16	MS21069L3	53-21-00-01	-033	03
MS21069L08K	53-30-02-03	-095	10	MS21069L3	53-21-00-01	-035	02
MS21069L08K	54-50-00-01	-054	03	MS21069L3	53-21-00-01	-114	02
MS21069L08K	54-50-00-01	-065	03	MS21069L3	53-21-00-02	-102	12
MS21069L08K	54-50-00-01	-137	03	MS21069L3	53-21-00-02	-109	02
MS21069L3	23-15-00-01	-095	11	MS21069L3	53-21-00-02	-112	04
MS21069L3	27-10-50-02	-031	02	MS21069L3	53-30-02-03	-006	18
MS21069L3	27-10-50-02	-033	01	MS21069L3	53-30-02-03	-076	22
MS21069L3	27-10-50-02	-169	02	MS21069L3	53-30-03-02	-012	09
MS21069L3	27-12-00-01	-009	12	MS21069L3	53-30-03-05	-028	13
MS21069L3	27-13-05-01	-102	01	MS21069L3	53-30-06-01	-173	05
MS21069L3	27-13-05-01	-172	01	MS21069L3	53-30-06-02	-105	05
MS21069L3	27-50-00-01	-010	04	MS21069L3	53-50-00-01	-158	10
MS21069L3	27-60-30-01	-108	01	MS21069L3	53-60-00-04	-028	02
MS21069L3	28-11-20-01	-192	03	MS21069L3	53-60-01-04	-018	03
MS21069L3	29-10-00-04	-044	01	MS21069L3	54-50-00-01	-194	05
MS21069L3	29-10-00-04	-157	01	MS21069L3	55-20-10-01	-009	02
MS21069L3	29-10-00-04	-306	01	MS21069L3	55-30-00-02	-027	08
MS21069L3	31-30-00-01	-010	03	MS21069L3	55-30-00-03	-019	44
MS21069L3	32-20-00-02	-101	03	MS21069L3	55-30-00-03	-094	44
MS21069L3	32-33-05-01	-008	02	MS21069L3	55-30-00-04	-188	02
MS21069L3	32-35-00-02	-005	01	MS21069L3	55-30-00-06	-013	02
MS21069L3	32-51-00-01	-044	01	MS21069L3	55-30-00-06	-017	02
MS21069L3	33-40-35-01	-029	02	MS21069L3	55-30-10-01	-010	AR
MS21069L3	34-10-00-02	-101	01	MS21069L3	55-30-10-01	-021	08
MS21069L3	34-47-05-01	-009	02	MS21069L3	55-30-10-01	-025	03
MS21069L3	34-57-00-01	-021	02	MS21069L3	55-40-00-01	-026	01
MS21069L3	35-10-20-01	-107	06	MS21069L4	52-10-03-01	-025	01
MS21069L3	36-15-00-01	-051	01	MS21069L5	52-10-22-02	-273	02
MS21069L3	36-15-00-02	-177	01	MS21069L6	52-10-03-01	-095	01
MS21069L3	38-30-00-01	-015	01	MS21070-04	52-10-31-01	-010	01
MS21069L3	38-30-15-01	-004	04	MS21070-08	21-50-10-01	-044	04
MS21069L3	52-10-00-01	-082	04	MS21070-08K	53-30-02-04	-005	19
MS21069L3	52-10-03-01	-014	03	MS21070-08K	53-30-02-04	-006	18
MS21069L3	52-10-03-01	-017	04	MS21070-3	34-10-00-01	-030	02
MS21069L3	52-10-03-01	-079	01	MS21070-3K	53-30-02-04	-004	09
MS21069L3	52-10-21-01	-004	04	MS21070-3K	53-30-02-04	-016	04
MS21069L3	52-10-21-01	-079	06	MS21070-3K	53-30-02-04	-026	04

© Cessna Aircraft Company

PART NUMBER	CH SEC SUBJ FIG	ITEM	REQ	PART NUMBER	CH SEC SUBJ FIG	ITEM	REQ
MS21070-3K	53-30-02-04	-030	04	MS21071L3	53-12-00-02	-015	04
MS21070-3K	53-30-02-04	-079	08	MS21071L3	53-12-15-01	-182	04
MS21070L06	34-24-01-01	-002	02	MS21071L3	53-20-00-11	-013	03
MS21070L08	27-10-30-01	-397	01	MS21071L3	53-20-00-11	-033	02
MS21070L08	28-21-00-02	-163	04	MS21071L3	53-20-00-12	-014	02
MS21070L08	28-21-00-03	-102	01	MS21071L3	53-20-04-01	-040	02
MS21070L08	54-50-00-01	-190	AR	MS21071L3	53-60-01-10	-045	01
MS21070L08K	53-30-02-03	-098	10	MS21071L3	57-40-00-02	-009	01
MS21070L08K	53-30-02-04	-009	28	MS21071L3	57-50-00-01	-026	02
MS21070L08K	53-30-02-04	-013	08	MS21071L3K	52-10-09-01	-022	04
MS21070L08K	53-30-02-04	-084	02	MS21071L4	52-10-22-01	-238	01
MS21070L3	21-26-00-01	-003	04	MS21072L3	53-20-03-03	-008	01
MS21070L3	21-26-00-01	-009	04	MS21072L3	57-51-00-02	-013	02
MS21070L3	21-26-00-01	-014	02	MS21072L3	57-51-00-02	-024	04
MS21070L3	21-26-00-01	-036	01	MS21072L3	57-60-00-01	-101	06
MS21070L3	25-50-00-01	-246	02	MS21073-06	30-40-00-01A	-017A	02
MS21070L3	26-13-00-01	-005	10	MS21073-08	55-10-00-01	-238	01
MS21070L3	26-23-00-01	-003	04	MS21073-3	24-60-40-01	-004	02
MS21070L3	29-10-00-09	-086	04	MS21073-3	52-10-22-02	-227	02
MS21070L3	29-10-00-09	-101	04	MS21073-3	52-10-22-02	-403	01
MS21070L3	29-10-00-12	-031	01	MS21073-3	52-10-22-02	-411	01
MS21070L3	30-10-30-01	-010	02	MS21073-3	52-40-19-01	-016	04
MS21070L3	32-30-00-02	-028	04	MS21073-3	53-10-10-01	-019	02
MS21070L3	32-49-00-02	-095	04	MS21073-3	53-21-00-01	-168	01
MS21070L3	57-60-00-01	-031	04	MS21073-3	53-21-00-02	-095	01
MS21070L3	57-60-00-01	-092	03	MS21073-3	53-21-00-02	-099	01
MS21070L3	57-60-00-01	-098	07	MS21073-3	53-42-03-01	-021	04
MS21070L3K	36-10-20-01	-009	09	MS21073-4	52-10-22-02	-404	01
MS21070L3K	36-10-20-01	-014	16	MS21073L04	27-50-00-01	-105	03
MS21070L3K	53-30-02-04	-085	06	MS21073L06	23-70-00-01	-006	02
MS21071-06	27-10-50-01	-345	03	MS21073L06	24-50-05-01	-006	02
MS21071-06	27-40-00-01	-158	02	MS21073L06	24-50-05-01	-014	04
MS21071-06	34-25-00-01	-020	02	MS21073L08	26-20-30-01	-013	04
MS21071-08	35-10-20-01	-036	02	MS21073L08	53-15-00-02	-103	04
MS21071-08	35-10-20-01	-047	02	MS21073L08	53-30-02-03	-004	02
MS21071-08	35-10-20-01	-077	04	MS21073L3	32-45-00-01	-029	04
MS21071-08	53-15-00-02	-099	07	MS21073L3	52-10-09-01	-007	06
MS21071-08	53-20-03-02	-012	06	MS21073L3	52-10-09-01	-017	04
MS21071-08	53-20-06-01	-028	03	MS21073L3	52-10-21-01	-035	06
MS21071-08	55-10-00-01	-231	02	MS21073L3	53-20-00-10	-026	04
MS21071-3	29-10-00-10	-032	02	MS21073L3	53-20-00-11	-014	14
MS21071L04	23-50-20-01	-012	01	MS21073L3	53-20-00-11	-034	14
MS21071L04	24-60-05-01	-022	02	MS21073L3	53-20-00-12	-020	04
MS21071L04	24-60-05-02	-022	02	MS21073L3	53-20-04-01	-036	05
MS21071L04	33-30-10-01	-015	04	MS21073L3	53-20-04-01	-041	03
MS21071L04K	24-60-35-01	-016	02	MS21073L3	53-21-00-01	-078	01
MS21071L04K	24-60-35-01	-030	02	MS21073L3	53-21-00-01	-081	01
MS21071L06	21-25-20-01	-080	02	MS21073L3	53-43-00-01	-044	13
MS21071L08	27-36-00-01	-187	02	MS21073L3	53-50-00-02	-098	03
MS21071L08	30-40-00-01	-019	02	MS21073L3	53-50-00-02	-111	01
MS21071L08	30-40-00-01A	-028	01	MS21073L3	55-10-00-02	-196	01
MS21071L08	31-30-00-01	-009	04	MS21073L4	53-10-10-01	-024	03
MS21071L08	33-40-15-01	-023	04	MS21074-3	32-35-00-02	-006	01
MS21071L08	52-30-20-01	-018	02	MS21074L08	52-11-00-01	-045	01
MS21071L08	53-30-02-03	-005	04	MS21074L3	53-20-03-03	-009	02
MS21071L08	57-20-05-02	-080	01	MS21074L3	57-60-00-01	-099	07
MS21071L3	29-10-00-04	-331	01	MS21074L3K	36-10-20-01	-015	02
MS21071L3	32-33-00-01	-101	01	MS21075-06N	52-40-19-01	-009	02
MS21071L3	52-10-03-01	-077	02	MS21075-08	23-50-25-01	-019	02
MS21071L3	52-10-09-01	-010	02	MS21075-08	23-50-25-01	-022	02
MS21071L3	52-10-09-01	-023	02	MS21075-08	52-10-31-01	-099	01
MS21071L3	52-70-40-01	-005	02	MS21075-08E	53-20-06-01	-029	02

© Cessna Aircraft Company

PART NUMBER	CH SEC SUBJ FIG	ITEM	REQ	PART NUMBER	CH SEC SUBJ FIG	ITEM	REQ
MS21075-08N	25-50-00-01	-022	04	MS21075L08N	25-50-00-01	-013	04
MS21075-08N	25-70-00-01	-034	04	MS21075L08N	25-50-00-01	-025	02
MS21075-08N	52-20-00-01	-017	04	MS21075L08N	25-50-00-01	-089	01
MS21075-08N	55-10-00-01	-083	16	MS21075L08N	25-50-00-01	-096	08
MS21075-3	32-51-05-01	-037	02	MS21075L08N	25-50-00-01	-100	07
MS21075-3E	27-60-20-01	-025	02	MS21075L08N	25-50-00-01	-163	01
MS21075-3E	32-49-00-01	-037	01	MS21075L08N	25-50-00-01	-226	01
MS21075-3E	33-40-35-02	-012	04	MS21075L08N	25-50-00-01	-229	13
MS21075-3E	33-40-35-02	-017	04	MS21075L08N	25-50-00-01	-232	01
MS21075-3N	25-10-01-02	-007	04	MS21075L08N	25-50-00-01	-235	06
MS21075-3N	25-70-00-01	-004	02	MS21075L08N	25-50-00-01	-243	06
MS21075-3N	25-70-00-01	-005	04	MS21075L08N	25-80-03-01	-012	02
MS21075-3N	25-70-00-01	-014	03	MS21075L08N	25-80-03-01	-029	11
MS21075-3N	25-70-00-01	-016	04	MS21075L08N	25-80-03-01	-035	07
MS21075-3N	25-70-00-01	-033	12	MS21075L08N	25-80-03-01	-089	04
MS21075-3N	25-70-00-01	-037	03	MS21075L08N	25-80-03-01	-090	06
MS21075-3N	25-70-00-01	-041	01	MS21075L08N	25-80-03-01	-095	08
MS21075-3N	27-60-20-01	-084	01	MS21075L08N	25-80-03-01	-101	03
MS21075-3N	32-47-10-01	-004	04	MS21075L08N	27-30-05-01	-161	04
MS21075-3N	52-10-00-01	-183	02	MS21075L08N	30-43-05-01	-006	04
MS21075-4E	27-20-05-01	-233	02	MS21075L08N	33-40-15-01	-029	04
MS21075-4E	27-20-05-01	-246	02	MS21075L08N	33-40-35-02	-029A	02
MS21075-5N	27-30-05-01	-160	02	MS21075L08N	33-40-35-02	-034	02
MS21075L04N	24-60-05-01	-020	02	MS21075L08N	33-40-35-02	-036	02
MS21075L04N	24-60-05-02	-020	02	MS21075L08N	33-50-05-01	-003	04
MS21075L04N	24-60-10-01	-012	02	MS21075L08N	34-24-01-01	-002B	02
MS21075L04N	24-60-10-02	-012	02	MS21075L08N	34-25-00-01	-017	02
MS21075L04N	25-50-00-01	-005	03	MS21075L08N	34-40-00-01	-012	02
MS21075L04N	25-50-00-01	-012	03	MS21075L08N	34-47-05-01	-005	04
MS21075L04N	25-50-00-01	-155	03	MS21075L08N	34-57-00-01	-013	18
MS21075L04N	34-40-00-01	-007	04	MS21075L08N	34-57-00-01	-016	08
MS21075L04N	55-30-10-01	-041	02	MS21075L08N	34-60-00-01	-098	02
MS21075L06N	21-29-00-01	-006	04	MS21075L08N	34-60-00-01	-100	02
MS21075L06N	24-30-55-01	-010	02	MS21075L08N	38-30-00-01	-012	02
MS21075L06N	24-60-10-01	-013	04	MS21075L08N	53-20-02-04	-007	04
MS21075L06N	24-60-10-02	-013	04	MS21075L08N	53-20-03-02	-002	02
MS21075L06N	25-50-00-01	-006	06	MS21075L08N	53-20-03-03	-003	06
MS21075L06N	33-10-25-01	-002	01	MS21075L08N	53-20-04-01	-024	03
MS21075L06N	34-24-01-01	-002A	02	MS21075L08N	53-20-04-01	-027	02
MS21075L06N	34-60-00-01	-080	03	MS21075L08N	53-20-04-01	-035	02
MS21075L06N	53-20-06-01	-005	02	MS21075L08N	53-20-04-01	-048	01
MS21075L06N	53-20-06-01	-036	02	MS21075L08N	53-20-04-01	-054	01
MS21075L08E	53-20-06-01	-032	02	MS21075L08N	53-21-00-01	-107A	01
MS21075L08N	23-13-00-01	-006	08	MS21075L08N	53-30-02-03	-171	18
MS21075L08N	23-15-05-01	-007	08	MS21075L08N	55-10-00-02	-004	02
MS21075L08N	23-70-00-01	-013	02	MS21075L08N	55-10-11-01	-004	14
MS21075L08N	24-30-55-01	-012	07	MS21075L08N	55-10-11-01	-010	14
MS21075L08N	24-30-55-01	-016	02	MS21075L08N	55-30-00-02	-170	03
MS21075L08N	24-30-55-01	-019	07	MS21075L08N	55-30-00-02	-188	03
MS21075L08N	24-30-55-01	-021	08	MS21075L08N	55-30-00-03	-023	06
MS21075L08N	24-60-00-01	-013	02	MS21075L08N	55-30-00-03	-098	13
MS21075L08N	24-60-10-01	-014	04	MS21075L08N	56-10-00-01	-003	04
MS21075L08N	24-60-10-01	-018	02	MS21075L08N	57-20-00-04	-024	02
MS21075L08N	24-60-10-01	-020	01	MS21075L08N	57-20-05-02	-007	01
MS21075L08N	24-60-10-02	-014	04	MS21075L08N	57-20-05-02	-020	01
MS21075L08N	24-60-10-02	-018	02	MS21075L08N	57-40-00-02	-011	04
MS21075L08N	24-60-10-02	-020	01	MS21075L08N	57-40-00-02	-015	04
MS21075L08N	24-60-15-01	-005	02	MS21075L08N	71-60-00-01	-011	12
MS21075L08N	24-60-15-01	-008	01	MS21075L08N	71-60-00-01	-029	21
MS21075L08N	25-10-05-01	-016	02	MS21075L3	53-21-00-01	-186	03
MS21075L08N	25-50-00-01	-007	04	MS21075L3	53-60-01-12	-020	04
MS21075L08N	25-50-00-01	-009	01	MS21075L3	55-30-10-01	-038	5

© Cessna Aircraft Company

PART NUMBER	CH SEC SUBJ FIG	ITEM	REQ
MS21075L3E	24-20-10-01	-008	04
MS21075L3E	27-30-05-01	-243	02
MS21075L3E	33-40-35-02	-021	22
MS21075L3N	21-25-00-01	-112	08
MS21075L3N	21-50-05-01	-017	02
MS21075L3N	23-15-00-01	-099	02
MS21075L3N	23-15-00-01	-103	08
MS21075L3N	24-20-25-01	-005	12
MS21075L3N	24-30-30-01	-022	02
MS21075L3N	24-30-30-01	-027	02
MS21075L3N	24-30-30-01	-028	04
MS21075L3N	24-30-30-01	-084	02
MS21075L3N	24-30-55-01	-009	16
MS21075L3N	24-30-55-01	-013	04
MS21075L3N	24-60-00-01	-006	12
MS21075L3N	24-60-00-01	-009	08
MS21075L3N	24-60-00-01	-047	07
MS21075L3N	24-60-00-01	-049	02
MS21075L3N	24-60-10-01	-011	08
MS21075L3N	24-60-10-02	-011	08
MS21075L3N	25-80-03-01	-028	02
MS21075L3N	25-80-03-01	-034	02
MS21075L3N	25-80-03-01	-096	02
MS21075L3N	26-20-05-01	-003	02
MS21075L3N	27-13-05-01	-082	01
MS21075L3N	27-20-05-02	-100	02
MS21075L3N	27-50-00-01	-084	08
MS21075L3N	27-50-00-01	-158	08
MS21075L3N	27-50-00-01	-234	08
MS21075L3N	27-50-00-01	-309	08
MS21075L3N	27-50-00-01	-384	08
MS21075L3N	27-50-00-01	-459	08
MS21075L3N	27-60-30-01	-103	01
MS21075L3N	28-40-10-01	-004	02
MS21075L3N	29-10-00-08	-050	04
MS21075L3N	29-10-00-08	-065	01
MS21075L3N	29-23-00-01	-018	02
MS21075L3N	30-10-00-01	-087	02
MS21075L3N	30-10-00-01	-090	06
MS21075L3N	30-10-00-01	-097	02
MS21075L3N	30-10-20-01	-014	02
MS21075L3N	30-10-20-01	-017	02
MS21075L3N	30-10-30-01	-024	02
MS21075L3N	30-13-00-01	-020	02
MS21075L3N	30-13-10-01	-022	02
MS21075L3N	32-30-00-02	-195A	02
MS21075L3N	33-40-35-02	-040	02
MS21075L3N	34-57-00-01	-014	08
MS21075L3N	34-57-00-01	-017	02
MS21075L3N	36-10-20-03	-101	36
MS21075L3N	36-15-00-01	-053	01
MS21075L3N	36-15-00-01	-101	01
MS21075L3N	53-10-12-01	-003	04
MS21075L3N	53-15-00-02	-022	02
MS21075L3N	53-15-00-02	-156	04
MS21075L3N	53-20-00-01	-088	03
MS21075L3N	53-20-00-10	-027	03
MS21075L3N	53-30-00-01	-016	08
MS21075L3N	53-30-00-01	-020	08
MS21075L3N	53-30-00-01	-024	16
MS21075L3N	53-30-00-01	-029	16
MS21075L3N	53-30-03-04	-013	AR

PART NUMBER	CH SEC SUBJ FIG	ITEM	REQ
MS21075L3N	53-30-03-04	-076	03
MS21075L3N	53-30-06-01	-095	34
MS21075L3N	53-30-06-02	-027	52
MS21075L3N	53-30-06-03	-268	AR
MS21075L3N	53-30-06-04	-263	AR
MS21075L3N	53-60-01-01	-032	20
MS21075L3N	55-30-00-01	-005A	84
MS21075L3N	55-30-00-01	-023	44
MS21075L3N	55-30-00-01	-033	27
MS21075L3N	55-30-00-03	-018	AR
MS21075L3N	55-30-00-03	-093	AR
MS21075L3N	55-30-00-04	-189	28
MS21075L3N	55-30-00-04	-232	02
MS21075L3N	55-30-00-04	-240	04
MS21075L3N	55-30-00-04	-247	02
MS21075L3N	55-30-00-05	-008	03
MS21075L3N	55-30-00-05	-010	06
MS21075L3N	55-30-00-06	-010	03
MS21075L3N	57-20-00-04	-015	02
MS21075L3N	57-20-01-21	-012	13
MS21075L3N	57-21-03-01	-003	07
MS21075L3N	57-30-00-01	-002	11
MS21075L3N	57-40-00-01	-004	AR
MS21075L3N	57-40-00-02	-019	AR
MS21075L3N	57-40-00-02	-080	AR
MS21075L3N	57-50-00-01	-027	09
MS21075L3N	57-50-00-01	-032	30
MS21075L3N	57-51-00-02	-005	AR
MS21075L3N	57-51-00-02	-032	04
MS21075L3N	57-70-00-02	-105	02
MS21075L3N	80-10-00-01	-159	02
MS21075L3N	80-10-00-01	-184	04
MS21075L4N	29-10-00-08	-012	02
MS21075L4N	29-10-00-08	-090	02
MS21076-04N	27-50-00-01	-106	02
MS21076-06N	28-11-40-01	-021	04
MS21076-08N	28-20-70-01	-012	02
MS21076-08N	28-21-00-03	-187	02
MS21076-08N	34-50-05-01	-008	02
MS21076-3	25-10-01-02	-002	02
MS21076-3	28-11-40-01	-010	08
MS21076-3	28-20-00-03	-230	06
MS21076-3	28-20-00-03	-237	04
MS21076-3	28-20-00-03	-242	08
MS21076-3	28-20-00-03	-244	01
MS21076-3	28-20-00-03	-248	08
MS21076-3N	25-10-01-02	-009	01
MS21076-3N	53-10-10-01	-040	04
MS21076-3N	53-10-10-01	-049	04
MS21076-3N	53-10-10-01	-058	04
MS21076-3N	53-60-00-05	-008	05
MS21076-3N	53-60-00-05	-017	05
MS21076-3N	53-60-00-05	-020	05
MS21076-3N	53-60-00-05	-023	10
MS21076-3N	53-60-01-12	-012	15
MS21076L06	53-43-00-01	-027	04
MS21076L08	53-21-00-01	-093	02
MS21076L08N	52-40-37-01	-024	02
MS21076L08N	52-40-37-01	-025	01
MS21076L08N	52-40-37-01	-173	02
MS21076L08N	52-40-37-01	-174	01
MS21076L3	53-43-00-01	-080	02

© Cessna Aircraft Company

PART NUMBER	CH SEC SUBJ FIG	ITEM	REQ
MS21076L3	53-43-00-01	-092	02
MS21076L3E	57-60-00-01	-077	02
MS21076L3N	28-21-00-02	-083	04
MS21076L3N	36-10-20-01	-021	27
MS21076L3N	53-60-04-01	-030	15
MS21076L3N	54-60-00-01	-004	AR
MS21076L3N	54-60-00-01	-082	14
MS21076L3N	54-60-00-01	-090	14
MS21076L3N	54-60-00-01	-167	AR
MS21076L3N	54-60-00-01	-173	AR
MS21076L3N	54-60-00-01	-180	AR
MS21076L3N	57-40-00-02	-159	AR
MS21076L3N	57-51-00-02	-014	31
MS21076L3N	57-51-00-02	-025	27
MS21076L3N	57-60-00-01	-100	22
MS21076L4N	57-30-00-01	-018	02
MS21083C08	28-20-05-01	-009	01
MS21083C3	28-20-05-01	-010	01
MS21083C3	28-21-00-01	-088	01
MS21083C5	28-11-55-01	-004	06
MS21083N04	21-33-00-01	-009	01
MS21083N06	27-50-20-01	-026	01
MS21083N06	56-13-00-01	-013	22
MS21083N08	27-10-15-01	-007	01
MS21083N08	27-10-15-01	-077	01
MS21083N08	27-10-15-01	-083	01
MS21083N08	27-10-15-01	-159	02
MS21083N08	27-10-30-01	-010	01
MS21083N08	27-10-30-01	-380	01
MS21083N08	27-10-30-01	-405	04
MS21083N08	27-10-30-01	-411	03
MS21083N08	27-11-00-01	-109	02
MS21083N08	27-13-00-01	-003	01
MS21083N08	27-32-00-01	-243	03
MS21083N08	27-33-00-01	-159	03
MS21083N08	27-60-00-01	-160	02
MS21083N08	57-20-05-02	-153	01
MS21083N08	57-20-05-02	-156	02
MS21083N3	27-11-00-01	-103	02
MS21083N3	27-20-00-01	-154	02
MS21083N3	27-20-00-01	-158	03
MS21083N3	27-20-00-01	-166	02
MS21083N3	27-50-20-01	-030	02
MS21083N3	27-60-20-01	-005	02
MS21083N3	27-60-20-01	-170	02
MS21083N3	27-60-30-01	-006	02
MS21083N3	27-60-30-01	-081	04
MS21083N3	30-40-00-01A	-039	01
MS21083N3	32-43-00-02	-238	04
MS21083N3	32-49-00-03	-093	01
MS21083N3	49-30-00-01	-020	03
MS21083N4	32-10-30-01	-015	02
MS21083N4	53-20-00-01	-007	01
MS21083N4	53-20-00-01	-011	04
MS21083N4	53-20-00-01	-026	01
MS21083N4	53-20-00-01	-039	01
MS21083N4	53-20-00-01	-154	01
MS21083N4	53-20-00-01	-164	01
MS21083N4	53-20-00-01	-177	01
MS21083N8	27-11-00-01	-006	02
MS21083N9	57-80-00-01	-077	04
MS21086-3	30-40-00-01A	-043	01
MS21090-0410	27-24-00-01	-010	05
MS21090-0410	27-50-20-01	-018	04
MS21090-0410	27-50-20-01	-020	09
MS21090-0410	27-50-20-01	-044	01
MS21090-0414	27-50-20-01	-036	06
MS21090-0621	27-50-20-01	-005	20
MS21090-0621	27-50-20-01	-013	05
MS21090-0621	27-50-20-01	-020B	03
MS21090-0624	27-50-20-01	-009	02
MS21151-1	71-10-00-01	-264	01
MS21151-2	71-10-00-01	-263	01
MS21153-6	32-10-30-01	-080	02
MS21153-6	32-10-30-01	-089	02
MS21209C0420	27-36-00-01	-160	05
MS21209C0615	27-14-00-01	-007	02
MS21209C0620	25-50-15-01	-020	02
MS21209C0620	27-14-00-01	-008	04
MS21209C0810	27-36-00-01	-165	02
MS21209C0815P	33-40-50-01	-007	02
MS21209C0820	23-15-00-01	-076	06
MS21209C0820	57-60-00-03	-008	01
MS21209F1-10	38-30-15-01	-009	04
MS21209F1-10P	34-53-00-01	-011	04
MS21209F1-15	32-70-00-01	-006	31
MS21209F1-15	32-70-00-01	-013	17
MS21209F1-15	34-25-00-01	-011	06
MS21209F1-15	53-20-01-01	-011	06
MS21209F4-10	52-10-19-01	-168	01
MS21209F4-15	27-25-00-01	-090	01
MS21209F4-15	27-25-00-01	-161	01
MS21209F4-15	27-25-00-01	-253	01
MS21209F4-15	27-25-00-01	-310	01
MS21209F4-15	27-36-00-01	-186	04
MS21209F4-15	32-10-00-01	-105	01
MS21209F4-15P	52-10-22-01	-016	02
MS21209F4-15P	52-10-22-01	-088	02
MS21209F4-15P	52-10-22-01	-165	02
MS21209F4-20	32-70-00-01	-007	14
MS21209F5-15	56-15-00-01	-020	01
MS21209F6-10P	52-10-22-02	-314	01
MS21245-7	32-10-00-01	-086	01
MS21251-A3L	32-43-00-01	-015	04
MS21251-B2S	27-10-50-01	-323	01
MS21251-B2S	27-11-00-01	-083	01
MS21251-B2S	27-35-00-01	-082	01
MS21251-B2S	32-35-00-02	-008	01
MS21251-B2S	32-51-00-01	-011	02
MS21251-B3S	22-10-10-01	-049	01
MS21251-B3S	27-13-05-01	-093	02
MS21251-B3S	27-60-20-01	-171	02
MS21251-B3S	27-60-30-01	-082	04
MS21251-B3S	36-10-20-01	-036	02
MS21251-B3S	36-10-20-03	-012	02
MS21251-B5S	27-10-15-01	-078	02
MS21251-B5S	27-10-15-01	-160	02
MS21251-B5S	27-13-00-01	-004	02
MS21251-B5S	27-13-00-01	-225	02
MS21251B5L	27-30-05-01	-107	01
MS21251B5S	27-10-30-01	-015	01
MS21251B5S	27-10-30-01	-383	01
MS21251B5S	27-20-05-02	-006	02
MS21251B5S	27-30-05-01	-109	01

© Cessna Aircraft Company

PART NUMBER	CH SEC SUBJ FIG	ITEM	REQ
MS21251B5S	32-49-00-01	-090	01
MS21252-3LL	36-10-20-01	-038	02
MS21252-3LS	36-10-20-03	-013	02
MS21252-3RL	36-10-20-01	-039	02
MS21252-3RL	36-10-20-03	-014	02
MS21252-4RS	27-10-15-01	-162	01
MS21256-1	22-10-10-01	-050	02
MS21256-1	27-10-15-01	-079	04
MS21256-1	27-10-15-01	-161	04
MS21256-1	27-10-30-01	-016	02
MS21256-1	27-10-30-01	-385	02
MS21256-1	27-10-50-01	-324	02
MS21256-1	27-11-00-01	-084	02
MS21256-1	27-13-00-01	-005	04
MS21256-1	27-13-00-01	-226	04
MS21256-1	27-13-05-01	-094	04
MS21256-1	27-20-05-02	-007	04
MS21256-1	27-30-05-01	-110	02
MS21256-1	27-35-00-01	-083	02
MS21256-1	27-60-20-01	-172	04
MS21256-1	27-60-30-01	-083	04
MS21256-1	32-35-00-02	-009	02
MS21256-1	32-49-00-01	-091	02
MS21256-1	32-51-00-01	-012	04
MS21256-1	36-10-20-01	-037	04
MS21256-1	36-10-20-03	-015	04
MS21256-2	27-30-05-01	-108	02
MS21256-3	32-43-00-01	-016	04
MS21258C24	32-41-05-01	-002	01
MS21262-22	27-36-00-01	-167	02
MS21262-22	27-36-00-01	-171	02
MS21266-1N	24-30-30-01	-032	AR
MS21266-1N	24-30-30-01	-039	AR
MS21266-1T	27-40-00-01	-101	02
MS21266-2T	57-20-00-04	-020	AR
MS21266-6N	25-80-03-01	-007	AR
MS21266-6N	25-80-03-01	-019	AR
MS21266-6N	25-80-03-01	-102	AR
MS21295-14	27-63-05-01	-010	03
MS21295-22	27-40-00-01	-027	02
MS21340-24	32-61-00-01	-003	01
MS21340-24	32-61-00-01	-077	01
MS21900D4	27-40-00-01	-094	01
MS21900D6	36-15-00-02	-018	02
MS21900D6	36-15-00-03	-018	01
MS21900W6	53-20-00-01	-013	01
MS21902D10	29-10-00-05	-159	01
MS21902D10	29-10-00-05	-183	02
MS21902D16	29-10-00-01	-022	01
MS21902D16	29-10-00-01	-032	01
MS21902D16	29-10-00-02	-019	01
MS21902D16	29-10-00-02	-027	01
MS21902D16	29-10-10-01	-165	01
MS21902D4	21-33-00-01	-017	01
MS21902D4	29-10-00-02	-155	01
MS21902D4	29-10-30-01	-008	01
MS21902D8	29-10-00-05	-178	01
MS21902J10	29-10-00-04	-164	01
MS21902J10	29-10-00-04	-309	01
MS21902J10	29-10-00-04	-324	01
MS21902J10	29-10-00-05	-180	01
MS21902J10	29-10-00-05	-304	01
MS21902J10	29-10-00-05	-313	01
MS21902J10	29-10-00-06	-052	01
MS21902J10	29-10-00-06	-099	01
MS21902J4	29-10-00-01	-039	01
MS21902J4	29-10-00-01	-158	01
MS21902J4	29-10-00-02	-034	01
MS21902J4	29-10-00-04	-005	02
MS21902J4	29-10-00-04	-252	01
MS21902J4	29-10-00-05	-167	01
MS21902J4	29-10-00-05	-234	02
MS21902J4	29-10-00-05	-241	01
MS21902J4	29-10-00-05	-301	01
MS21902J4	29-10-00-05	-306	01
MS21902J4	29-10-00-05	-326	01
MS21902J4	29-10-00-06	-181	02
MS21902J4	29-10-00-08	-014	04
MS21902J4	29-10-00-08	-041	01
MS21902J4	29-10-00-08	-091	04
MS21902J4	29-10-00-12	-178	02
MS21902J4	29-10-00-12	-254	01
MS21902J4	29-10-00-12	-329	04
MS21902J4	29-10-10-01	-082	01
MS21902J4	29-10-10-01	-155	01
MS21902J4	29-10-80-01	-021	01
MS21902J4	29-10-80-01	-096	02
MS21902J4	29-23-00-01	-080	02
MS21902J4	29-23-00-01	-233	01
MS21902J4	29-23-00-01	-303	01
MS21902J4	29-23-00-01	-378	01
MS21902J4	29-23-00-01	-391	01
MS21902J4	32-30-00-02	-003	01
MS21902J4	32-33-00-01	-027	01
MS21902J4	32-47-00-01	-003	04
MS21902J4	32-49-00-01	-008	01
MS21902J4	32-49-00-03	-112	04
MS21902J4	32-50-25-01	-007	02
MS21902J4	32-51-00-01	-096	01
MS21902J4	32-51-05-01	-019	01
MS21902J4	32-51-05-01	-102	02
MS21902J4	32-51-25-01	-007	02
MS21902J4	78-30-10-01	-012	01
MS21902J4	78-30-10-02	-080	01
MS21902J5	29-23-05-01	-081	01
MS21902J6	29-10-00-04	-322	01
MS21902J6	29-10-00-05	-175	01
MS21902J6	29-10-00-06	-022	01
MS21902J6	29-10-00-07	-009	01
MS21902J6	29-10-00-08	-040	02
MS21902J6	29-20-05-01	-020	01
MS21902J6	29-23-00-01	-078	01
MS21902J6	32-30-00-02	-152	04
MS21902J6	32-30-00-03	-031	01
MS21902J6	78-30-10-01	-008	01
MS21902J8	29-10-00-05	-154	01
MS21902J8	29-10-00-05	-164	01
MS21902J8	36-15-00-03	-079	04
MS21902W6	78-30-10-01	-091	01
MS21902W6	78-30-10-02	-093	01
MS21904J4	29-10-00-08	-004	01
MS21904J4	29-10-00-08	-099	01
MS21905D12	29-10-00-06	-088	NP
MS21905D6	32-47-00-01	-012	NP

© Cessna Aircraft Company

PART NUMBER	CH SEC SUBJ FIG	ITEM	REQ
MS21905D8	29-10-00-01	-082	NP
MS21905D8	29-10-00-02	-094	NP
MS21905J4	32-33-00-01	-092	01
MS21905J8	36-15-00-03	-029	04
MS21905W12	29-10-00-06	-088A	01
MS21905W6	32-47-00-01	-012A	01
MS21905W8	29-10-00-01	-082A	01
MS21905W8	29-10-00-02	-094A	01
MS21907D12	29-10-00-06	-077	01
MS21907J4	29-10-00-12	-185	01
MS21907J4	29-10-10-01	-075	01
MS21907J4	29-10-10-01	-225	01
MS21907J4	32-33-00-01	-155	01
MS21907J4	32-49-00-02	-010	01
MS21908D08	29-10-00-01	-042	01
MS21908D12	29-10-00-06	-090	01
MS21908D16	29-10-10-01	-014	01
MS21908D8	29-10-00-06	-159	01
MS21908K8	36-15-00-02	-007	01
MS21908K8	36-15-00-03	-096	01
MS21910J10	29-10-00-06	-094	01
MS21910J4	32-51-05-01	-091	01
MS21910J8	29-21-00-01	-020	01
MS21911J10	29-10-00-01	-003	01
MS21911J10	29-10-00-01	-015	01
MS21911J10	29-10-00-02	-011	01
MS21911J10	29-10-10-01	-012	01
MS21911J10	29-10-10-01	-163	01
MS21912J4	27-80-00-01	-075	04
MS21912J4	29-10-00-11	-189	01
MS21912J4	29-23-00-01	-310	01
MS21912J4	32-51-05-01	-092	01
MS21913D8	29-23-05-01	-163	01
MS21914-4J	29-10-09-01	-153	01
MS21914-4J	29-10-09-01	-231	01
MS21914-4J	29-10-10-01	-083	01
MS21914-4J	29-10-10-01	-156	01
MS21914-8J	36-15-00-03	-030	01
MS21916D6-4	29-10-00-02	-166	01
MS21916D8-6	36-15-00-02	-023	01
MS21916J10-8	29-10-00-05	-225	01
MS21916J10-8	29-21-00-01	-008	01
MS21916J10-8	29-21-00-01	-010	01
MS21916J12-8	29-21-00-01	-006	01
MS21916J4-2	29-20-05-01	-004	01
MS21916J4-3	29-20-05-01	-006	01
MS21916J5-4	29-23-05-01	-016	02
MS21916J5-4	32-51-05-01	-012	01
MS21916J6-4	29-10-00-01	-167	01
MS21916J6-4	29-10-00-08	-102	02
MS21916J6-4	29-20-05-01	-010	01
MS21916J6-4	29-23-00-01	-300	01
MS21916J6-4	32-30-00-03	-015	01
MS21916J6-4	32-43-00-02	-003	02
MS21916J6-4	32-43-00-02	-271	04
MS21916J6-4	78-30-10-01	-084	01
MS21916J6-4	78-30-10-02	-090	01
MS21916J8-4	29-23-05-01	-011	02
MS21916J8-4	29-23-05-01	-086	01
MS21916J8-4	29-23-05-01	-157	01
MS21916J8-6	36-15-00-03	-023	02
MS21919DE50	21-26-00-01	-032	02
MS21919WCE4	29-10-00-01	-170	01
MS21919WCE4	29-10-00-02	-164	01
MS21919WCE6	29-10-00-01	-169	01
MS21919WCE6	29-10-00-05	-186	01
MS21919WCE6	29-10-00-05	-319	01
MS21919WCH10	37-10-00-01	-108	05
MS21919WCH12	32-35-00-01	-087	02
MS21919WCH16	30-13-10-01	-104	02
MS21919WCH16	30-20-00-01	-026	02
MS21919WCH20	30-13-10-01	-100	03
MS21919WCH22	30-20-00-01	-015	01
MS21919WCH24	30-10-20-01	-024	02
MS21919WCH24	36-15-00-03	-014	02
MS21919WCH32	21-23-00-01	-007	01
MS21919WCH32	30-10-00-02	-007	08
MS21919WCH32	30-10-00-02	-176	01
MS21919WCH4	36-15-00-01	-038	11
MS21919WCH4	36-15-00-01	-090	06
MS21919WCH4	36-15-00-02	-103	01
MS21919WCH4	37-10-00-01	-092	04
MS21919WCH4	37-10-00-01	-096	05
MS21919WCH4	37-10-00-01	-099	02
MS21919WCH4	37-10-00-01	-102	01
MS21919WCH40	21-23-00-01	-006	01
MS21919WCH40	21-23-00-01	-079	01
MS21919WCH40	21-23-00-01	-089	03
MS21919WCH40	21-25-00-01	-082	02
MS21919WCH40	21-25-00-01	-086	02
MS21919WCH40	21-25-00-01	-094	04
MS21919WCH40	21-26-00-01	-033	01
MS21919WCH40	36-15-00-02	-030	01
MS21919WCH40	37-10-00-01	-095	05
MS21919WCH6	32-35-00-01	-086	02
MS21919WCH6	32-35-00-02	-016	02
MS21919WCH6	36-15-00-01	-089	38
MS21919WCH6	36-15-00-02	-028	15
MS21919WCH6	36-15-00-02	-166	12
MS21919WCH6	36-15-00-03	-015	01
MS21919WCH6	37-10-00-01	-091	04
MS21919WCH8	36-15-00-02	-029	03
MS21919WCH8	36-15-00-03	-036	05
MS21919WCH8	36-15-00-03	-101	06
MS21919WCH8	53-30-02-01	-019	01
MS21919WCJ10	26-10-00-01	-013	04
MS21919WCJ16	26-11-00-01	-002	01
MS21919WCJ18	32-43-00-02	-169	04
MS21919WCJ24	21-21-00-01	-008	01
MS21919WCJ24	21-21-00-01	-034	02
MS21919WCJ24	21-25-00-01	-005	03
MS21919WCJ24	30-10-00-01	-076	02
MS21919WCJ24	30-13-00-01	-010	01
MS21919WCJ3	26-11-00-01	-009	03
MS21919WCJ32	24-35-00-01	-076	01
MS21919WCJ32	24-35-00-01	-085	01
MS21919WCJ32	36-10-20-02	-083	02
MS21919WCJ32	36-10-20-04	-029	01
MS21919WCJ32	36-10-20-04	-090	01
MS21919WCJ4	26-10-00-01	-010	04
MS21919WCJ4	27-80-00-03	-034	04
MS21919WCJ4	27-80-00-03	-088	06
MS21919WCJ4	29-10-00-12	-159	06
MS21919WCJ4	29-10-00-12	-237	08

© Cessna Aircraft Company

PART NUMBER	CH SEC SUBJ FIG	ITEM	REQ
MS21919WCJ4	29-10-00-12	-304	08
MS21919WCJ4	29-10-00-12	-319	08
MS21919WCJ40	80-10-00-01	-164	01
MS21919WCJ6	26-10-00-01	-011	02
MS21919WCJ6	29-10-00-12	-027	08
MS21919WCJ6	29-10-00-12	-160	02
MS21919WCJ8	26-10-00-01	-012	36
MS21919WCJ8	71-70-00-01	-023	01
MS21919WDE10	29-10-00-01	-010	03
MS21919WDE10	29-10-00-02	-007	04
MS21919WDE10	29-10-00-04	-328	01
MS21919WDE10	29-10-00-06	-034	01
MS21919WDE10	29-10-00-06	-190	02
MS21919WDE10	29-10-80-01	-028	02
MS21919WDE10	29-10-80-01	-167	01
MS21919WDE12	29-10-00-01	-154	02
MS21919WDE12	29-10-00-02	-031	01
MS21919WDE12	29-10-00-04	-100	02
MS21919WDE12	29-10-00-04	-238	01
MS21919WDE12	29-10-80-01	-033	01
MS21919WDE12	29-10-80-01	-103	01
MS21919WDE12	29-10-80-01	-162	02
MS21919WDE12	29-10-80-01	-169	01
MS21919WDE14	32-50-25-01	-002	01
MS21919WDE14	32-51-05-01	-099	02
MS21919WDE14	32-51-25-01	-002	01
MS21919WDE16	29-30-00-01	-004	01
MS21919WDE16	35-10-20-01	-169	01
MS21919WDE17	29-10-00-05	-329	01
MS21919WDE19	29-10-00-04	-181	01
MS21919WDE19	29-23-05-01	-019	01
MS21919WDE19	29-23-05-01	-093	01
MS21919WDE19	32-33-00-01	-029	01
MS21919WDE19	32-49-00-01	-039	01
MS21919WDE19	32-51-05-01	-029	01
MS21919WDE2	35-10-20-01	-043	01
MS21919WDE2	35-10-20-01	-117	02
MS21919WDE2	35-10-20-01	-126	02
MS21919WDE2	35-10-20-01	-173	01
MS21919WDE2	35-10-20-01	-178	01
MS21919WDE3	32-20-00-01	-015	01
MS21919WDE3	35-10-20-01	-033	02
MS21919WDE3	35-10-20-01	-116	02
MS21919WDE3	35-10-20-01	-125	03
MS21919WDE4	27-80-00-01	-010	02
MS21919WDE4	29-10-00-04	-303	01
MS21919WDE4	29-10-00-05	-016	03
MS21919WDE4	29-10-00-05	-020	01
MS21919WDE4	29-10-00-05	-079	01
MS21919WDE4	29-10-00-05	-188	03
MS21919WDE4	29-10-00-05	-244	06
MS21919WDE4	29-10-00-06	-033	02
MS21919WDE4	29-10-00-06	-200	01
MS21919WDE4	29-10-00-07	-012	04
MS21919WDE4	29-10-00-07	-030	12
MS21919WDE4	29-10-00-07	-164	AR
MS21919WDE4	29-10-00-07	-167	01
MS21919WDE4	29-10-00-08	-017	04
MS21919WDE4	29-10-00-08	-057	02
MS21919WDE4	29-10-00-08	-061	02
MS21919WDE4	29-10-00-08	-078	06
MS21919WDE4	29-10-00-09	-092	AR
MS21919WDE4	29-10-00-10	-075	03
MS21919WDE4	29-10-00-10	-094	02
MS21919WDE4	29-10-00-11	-028	06
MS21919WDE4	29-10-00-11	-084	04
MS21919WDE4	29-10-00-11	-089	04
MS21919WDE4	29-10-00-11	-101	04
MS21919WDE4	29-10-00-11	-106	08
MS21919WDE4	29-10-00-11	-154	04
MS21919WDE4	29-10-00-11	-171	02
MS21919WDE4	29-10-00-11	-177	04
MS21919WDE4	29-10-00-11	-181	12
MS21919WDE4	29-10-00-11	-229	20
MS21919WDE4	29-10-00-11	-233	04
MS21919WDE4	29-21-00-01	-017	01
MS21919WDE4	29-23-00-01	-006	10
MS21919WDE4	29-23-00-01	-095	01
MS21919WDE4	29-23-00-01	-163	01
MS21919WDE4	29-23-00-01	-167	01
MS21919WDE4	29-23-00-01	-240	02
MS21919WDE4	29-23-00-01	-315	01
MS21919WDE4	32-20-00-01	-011	06
MS21919WDE4	32-30-00-02	-108	01
MS21919WDE4	32-33-00-01	-018	02
MS21919WDE4	32-33-00-01	-020	02
MS21919WDE4	32-33-00-01	-084	04
MS21919WDE4	32-33-00-01	-102	02
MS21919WDE4	32-33-00-01	-161	10
MS21919WDE4	32-33-00-01	-231	09
MS21919WDE4	32-33-00-01	-303	05
MS21919WDE4	32-33-00-01	-391	09
MS21919WDE4	32-43-00-02	-014	14
MS21919WDE4	32-43-00-02	-080	10
MS21919WDE4	32-43-00-02	-191	17
MS21919WDE4	32-43-00-02	-239	16
MS21919WDE4	32-45-00-01	-016	16
MS21919WDE4	32-45-00-01	-019	03
MS21919WDE4	32-47-00-01	-25	04
MS21919WDE4	32-49-00-01	-020A	01
MS21919WDE4	32-49-00-01	-025	06
MS21919WDE4	32-49-00-02	-013	10
MS21919WDE4	32-49-00-02	-085	11
MS21919WDE4	32-49-00-03	-005	04
MS21919WDE4	32-49-00-03	-014	AR
MS21919WDE4	32-49-00-03	-085	08
MS21919WDE4	32-51-00-01	-101	02
MS21919WDE4	32-51-00-01	-109	01
MS21919WDE4	32-51-00-01	-115	06
MS21919WDE4	32-51-00-01	-119	03
MS21919WDE4	32-51-05-01	-015	01
MS21919WDE4	32-51-05-01	-020	03
MS21919WDE4	34-10-00-01	-013	02
MS21919WDE4	34-10-00-02	-017	02
MS21919WDE4	34-10-00-02	-029	01
MS21919WDE4	34-10-00-02	-225	28
MS21919WDE4	34-10-00-02	-230	02
MS21919WDE4	34-10-00-02	-233	02
MS21919WDE4	34-10-00-02	-238	02
MS21919WDE4	34-10-00-02	-242	01
MS21919WDE4	35-10-00-01	-109	01
MS21919WDE4	35-10-20-01	-111	03
MS21919WDE4	35-10-20-01	-115	02
MS21919WDE4	35-10-20-01	-124	02

© Cessna Aircraft Company

PART NUMBER	CH SEC SUBJ FIG	ITEM	REQ
MS21919WDE4	35-20-00-01	-025	01
MS21919WDE4	35-20-00-01	-028	01
MS21919WDE4	78-30-10-01	-097	02
MS21919WDE4	78-30-10-01	-101	02
MS21919WDE4	78-30-10-02	-002	02
MS21919WDE4	78-30-10-02	-021	02
MS21919WDE4	78-30-10-02	-029	01
MS21919WDE5	32-49-00-01	-020B	01
MS21919WDE5	35-10-00-01	-075	01
MS21919WDE5	35-10-00-01	-078	01
MS21919WDE5	35-10-00-01	-084	06
MS21919WDE5	35-10-00-01	-089	01
MS21919WDE5	35-10-00-01	-091	02
MS21919WDE5	35-10-00-01	-094	02
MS21919WDE5	35-10-00-01	-098	01
MS21919WDE5	35-10-00-01	-101	01
MS21919WDE5	35-10-00-01	-105	01
MS21919WDE5	35-10-00-01	-110	01
MS21919WDE5	35-10-20-01	-037	02
MS21919WDE5	35-10-20-01	-042	01
MS21919WDE5	35-10-20-01	-123	02
MS21919WDE5	35-10-20-01	-172	01
MS21919WDE5	35-10-20-01	-177	01
MS21919WDE5	35-20-00-01	-017	01
MS21919WDE5	35-20-00-01	-024	01
MS21919WDE5	35-20-00-01	-029	01
MS21919WDE6	29-10-00-02	-170	01
MS21919WDE6	29-10-00-04	-024	02
MS21919WDE6	29-10-00-04	-036	02
MS21919WDE6	29-10-00-04	-105	01
MS21919WDE6	29-10-00-04	-154	02
MS21919WDE6	29-10-00-04	-319	01
MS21919WDE6	29-10-00-05	-006	02
MS21919WDE6	29-10-00-05	-027	07
MS21919WDE6	29-10-00-05	-080	01
MS21919WDE6	29-10-00-05	-091	01
MS21919WDE6	29-10-00-05	-096	04
MS21919WDE6	29-10-00-05	-101	01
MS21919WDE6	29-10-00-05	-108	01
MS21919WDE6	29-10-00-05	-185	01
MS21919WDE6	29-10-00-06	-031	06
MS21919WDE6	29-10-00-06	-188	01
MS21919WDE6	29-10-00-09	-078	AR
MS21919WDE6	29-10-00-10	-079	01
MS21919WDE6	29-10-00-10	-093	01
MS21919WDE6	29-10-80-01	-029	01
MS21919WDE6	29-23-00-01	-094	01
MS21919WDE6	29-23-00-01	-164	01
MS21919WDE6	29-23-00-01	-168	01
MS21919WDE6	32-30-00-02	-024	12
MS21919WDE6	32-30-00-02	-109	01
MS21919WDE6	32-30-00-02	-193	02
MS21919WDE6	32-30-00-03	-038	08
MS21919WDE6	32-30-00-03	-087	02
MS21919WDE6	32-30-00-03	-090	06
MS21919WDE6	34-10-00-02	-013	02
MS21919WDE6	34-10-00-02	-016	02
MS21919WDE6	34-10-00-02	-020	02
MS21919WDE6	34-10-00-02	-025	01
MS21919WDE6	34-10-00-02	-028	01
MS21919WDE6	34-10-00-02	-096	02
MS21919WDE6	34-10-00-02	-102	01
MS21919WDE6	34-10-00-02	-106	02
MS21919WDE6	78-30-10-01	-099	05
MS21919WDE6	78-30-10-01	-102	01
MS21919WDE6	78-30-10-02	-012	02
MS21919WDE6	78-30-10-02	-022	02
MS21919WDE6	78-30-10-02	-025	01
MS21919WDE6	78-30-10-02	-030	01
MS21919WDE7	35-10-20-01	-032	02
MS21919WDE8	29-10-00-01	-079	02
MS21919WDE8	29-10-00-02	-087	02
MS21919WDE8	29-10-00-04	-019	02
MS21919WDE8	29-10-00-04	-030	01
MS21919WDE8	29-10-00-04	-042	01
MS21919WDE8	29-10-00-04	-106	01
MS21919WDE8	29-10-00-04	-107	01
MS21919WDE8	29-10-00-05	-019	01
MS21919WDE8	29-10-00-05	-023	05
MS21919WDE8	29-10-00-05	-090	02
MS21919WDE8	29-10-00-05	-095	01
MS21919WDE8	29-10-00-05	-100	02
MS21919WDE8	29-10-00-05	-106	01
MS21919WDE8	29-10-00-05	-189	01
MS21919WDE8	29-10-00-06	-032	06
MS21919WDE8	29-10-00-06	-189	02
MS21919WDE8	29-10-80-01	-168	01
MS21919WDE8	29-23-05-01	-160	03
MS21919WDE8	32-30-00-02	-107	14
MS21919WDE8	32-30-00-02	-107A	12
MS21919WDE8	32-30-00-02	-193A	01
MS21919WDF10	28-11-30-01	-004	01
MS21919WDF10	28-20-00-03	-178	02
MS21919WDF10	28-20-21-01	-089	01
MS21919WDF10	28-20-21-01	-096	01
MS21919WDF10	29-10-00-10	-014	01
MS21919WDF10	29-10-00-10	-190	01
MS21919WDF12	30-10-00-01	-013	02
MS21919WDF16	28-11-20-01	-023	02
MS21919WDF16	28-11-20-01	-081	AR
MS21919WDF16	28-11-20-01	-090	AR
MS21919WDF16	28-20-00-03	-177	02
MS21919WDF16	28-21-00-02	-089	02
MS21919WDF16	28-21-00-02	-178	02
MS21919WDF20	28-11-10-01	-003	04
MS21919WDF20	28-11-10-01	-016	02
MS21919WDF20	28-11-10-01	-081	06
MS21919WDF20	28-20-21-01	-007	01
MS21919WDF20	28-20-21-01	-017	01
MS21919WDF20	28-20-21-01	-079	01
MS21919WDF20	28-20-21-01	-103	01
MS21919WDF20	28-20-21-01	-155	01
MS21919WDF20	28-21-00-02	-174	01
MS21919WDF20	28-21-00-02	-182	01
MS21919WDF20	28-21-00-02	-188	01
MS21919WDF20	28-21-00-03	-046	01
MS21919WDF28	28-20-00-03	-081	02
MS21919WDF4	21-21-00-01	-032	06
MS21919WDF4	21-35-00-01	-019	01
MS21919WDF4	28-21-00-02	-005	01
MS21919WDF4	28-21-00-02	-011	01
MS21919WDF4	28-21-00-02	-017	01
MS21919WDF4	28-21-00-02	-259	03
MS21919WDF4	28-21-00-02	-322	02

© Cessna Aircraft Company

PART NUMBER	CH SEC SUBJ FIG	ITEM	REQ
MS21919WDF4	28-21-00-02	-329	01
MS21919WDF4	28-21-00-03	-008	01
MS21919WDF4	28-21-00-03	-035	01
MS21919WDF4	28-21-00-03	-078	01
MS21919WDF4	28-21-00-03	-118	01
MS21919WDF4	30-13-10-01	-101	03
MS21919WDF4	52-11-20-01	-021	02
MS21919WDF4	80-10-00-01	-174	01
MS21919WDF6	28-21-00-02	-248	03
MS21919WDF6	28-21-00-02	-335	01
MS21919WDF6	28-21-00-02	-340	01
MS21919WDF6	28-21-00-03	-018	01
MS21919WDF6	28-21-00-03	-041	01
MS21919WDF6	28-21-00-03	-084	01
MS21919WDF6	28-21-00-03	-112	01
MS21919WDF6	29-10-00-10	-015	01
MS21919WDF6	29-10-00-10	-191	01
MS21919WDF6	53-30-03-04	-086	02
MS21919WDF7	32-43-00-01	-080	03
MS21919WDF7	32-43-00-01	-083	07
MS21919WDF8	53-30-02-01	-018	05
MS21919WDG10	28-11-30-01	-015	01
MS21919WDG10	28-20-00-02	-026	01
MS21919WDG10	28-20-00-02	-031	01
MS21919WDG10	28-20-00-02	-032	01
MS21919WDG10	28-20-00-02	-115	01
MS21919WDG10	28-20-00-02	-121	02
MS21919WDG10	29-10-10-01	-086	03
MS21919WDG10	29-10-10-01	-233	06
MS21919WDG10	30-40-00-01A	-032	01
MS21919WDG10	30-40-00-01A	-037	01
MS21919WDG10	30-40-00-01A	-041	01
MS21919WDG10	49-30-00-01	-016	03
MS21919WDG16	28-11-10-01	-151	01
MS21919WDG16	28-20-00-01	-006	01
MS21919WDG16	28-20-00-02	-006	01
MS21919WDG16	28-20-00-02	-086	01
MS21919WDG16	28-20-00-02	-120	02
MS21919WDG16	28-23-00-01	-005	01
MS21919WDG16	29-10-10-01	-088	02
MS21919WDG16	29-10-10-01	-235	09
MS21919WDG17	73-10-00-01	-040	01
MS21919WDG17	73-10-00-02	-005	03
MS21919WDG18	29-10-10-01	-239	01
MS21919WDG19	73-10-00-01	-004	01
MS21919WDG19	73-10-00-01	-038	01
MS21919WDG19	73-10-00-02	-007	07
MS21919WDG22	29-10-10-01	-240	01
MS21919WDG22	73-10-00-01	-009	01
MS21919WDG22	73-10-00-01	-037	02
MS21919WDG22	73-10-00-02	-008	07
MS21919WDG26	29-10-10-01	-087	02
MS21919WDG26	29-10-10-01	-234	11
MS21919WDG26	73-10-00-01	-014	02
MS21919WDG26	73-10-00-01	-039	02
MS21919WDG26	73-10-00-02	-006	03
MS21919WDG28	73-30-00-01	-006	01
MS21919WDG4	35-20-00-01	-090	12
MS21919WDG4	71-70-00-01	-008	01
MS21919WDG40	21-26-00-01	-033A	01
MS21919WDG40	28-20-00-02	-077	01
MS21919WDG6	28-11-30-01	-029	01
MS21919WDG6	28-21-00-01	-020	03
MS21919WDG6	49-30-00-01	-015	07
MS21919WDG6	49-30-00-01	-078	05
MS21919WDG6	49-30-00-01	-081	01
MS21919WDG9	27-50-00-01	-013	04
MS21919WH3	21-23-00-01	-160	02
MS21919WH3	21-23-00-01	-165	01
MS21919WH3	21-23-00-01	-170	04
MS21920-20	32-20-00-02	-166	01
MS21920-30	38-30-15-01	-012	07
MS21924J4	27-80-00-02	-001	08
MS21924J4	27-80-00-02	-075	08
MS21924J4	27-80-00-03	-001	08
MS21924J4	27-80-00-03	-075	08
MS21924J4	29-10-00-02	-152	01
MS21924J4	29-10-00-05	-231	01
MS21924J4	29-10-00-08	-030	01
MS21924J4	29-10-00-08	-054	02
MS21924J4	29-10-00-10	-023	01
MS21924J4	29-10-00-10	-177	01
MS21924J4	29-10-00-12	-001	05
MS21924J4	29-10-00-12	-087	06
MS21924J4	29-10-00-12	-243	08
MS21924J4	29-10-00-12	-334	04
MS21924J4	29-10-10-01	-080	01
MS21924J4	29-10-10-01	-230	01
MS21924J4	29-23-00-01	-171	01
MS21924J4	29-23-05-01	-152	01
MS21924J4	32-33-00-01	-094	01
MS21924J4	32-33-00-01	-375	01
MS21924J4	32-43-00-02	-085	01
MS21924J4	32-43-00-02	-229	04
MS21924J4	32-43-00-02	-259	04
MS21924J4	32-49-00-02	-096	01
MS21924J4	32-49-00-03	-076	02
MS21924J4	32-49-00-03	-099	02
MS21924J4	32-51-00-01	-081	01
MS21924J6	29-10-00-10	-003	11
MS21924J6	29-10-00-10	-009	01
MS21924J6	29-10-00-10	-019	01
MS21924J6	29-10-00-10	-180	01
MS21924J6	29-10-00-10	-186	01
MS21924J6	29-10-00-12	-004	03
MS21924J6	29-10-00-12	-090	02
MS21924J6	29-23-00-01	-225	01
MS21924J6	32-30-00-02	-029	02
MS21924J6	32-30-00-03	-054	02
MS21924J8	29-10-00-02	-083	01
MS21924J8	32-30-00-02	-086	02
MS21924W12	29-10-00-02	-099	01
MS21926J10	29-10-00-04	-312	01
MS21926J4	29-10-00-08	-013A	01
MS21926J4	29-10-00-12	-184	02
MS21926J4	29-10-00-12	-184A	01
MS21926J4	29-10-00-12	-254A	01
MS21926J4	29-10-00-12	-255	02
MS21926J4	29-10-00-12	-332	04
MS21926J4	29-21-00-01	-012	01
MS21926J4	29-23-00-01	-384	01
MS21926J6	29-10-00-11	-011	01
MS21926J6	78-30-10-01	-078	01
MS21926J6	78-30-10-02	-088	01

© Cessna Aircraft Company

PART NUMBER	CH SEC SUBJ FIG	ITEM	REQ	PART NUMBER	CH SEC SUBJ FIG	ITEM	REQ
MS24166-D1	24-60-10-01	-247	01	MS24665-132	27-11-00-01	-230	01
MS24166-D1	24-60-10-01	-248	01	MS24665-132	27-11-00-01	-256	02
MS24166-D1	24-60-10-02	-246	01	MS24665-132	27-11-00-01	-260	01
MS24166-D1	24-60-10-02	-247	01	MS24665-132	27-13-00-01	-017	01
MS24166-D1	24-60-10-02	-248	01	MS24665-132	27-13-00-01	-156	02
MS24166-D2	33-40-35-02	-037	01	MS24665-132	27-13-00-01	-238	04
MS24166-D2	33-40-35-02	-038	01	MS24665-132	27-13-05-01	-010	01
MS24388D6	28-21-00-02	-265	04	MS24665-132	27-13-05-01	-014	02
MS24388D6	28-21-00-03	-011	02	MS24665-132	27-13-05-01	-021	01
MS24392D4	52-11-20-01	-018A	NP	MS24665-132	27-13-05-01	-024	02
MS24393D4	21-35-00-01	-077	01	MS24665-132	27-13-05-01	-079	02
MS24393D4	28-21-00-02	-106A	02	MS24665-132	27-13-05-01	-092	01
MS24393D4	28-21-00-03	-002A	02	MS24665-132	27-13-05-01	-099	02
MS24393D4	28-21-00-03	-087A	02	MS24665-132	27-13-05-01	-156	01
MS24393D4	28-21-00-03	-164A	02	MS24665-132	27-13-05-01	-160	01
MS24484-2	28-21-00-01	-028	01	MS24665-132	27-13-05-01	-178	01
MS24585C285	25-50-15-01	-029	01	MS24665-132	27-13-05-01	-181	01
MS24585C285	25-50-15-01	-091	04	MS24665-132	27-13-05-01	-246	02
MS24586-135	29-10-80-01	-156	02	MS24665-132	27-20-05-01	-159	04
MS24586-573	27-11-00-01	-098	01	MS24665-132	27-20-05-01	-178	02
MS24586-609	27-11-00-01	-174	01	MS24665-132	27-20-05-01	-230	02
MS24665-103	27-11-00-01	-017	01	MS24665-132	27-20-05-02	-082	01
MS24665-105	21-33-00-01	-015	04	MS24665-132	27-20-05-02	-091	01
MS24665-132	21-50-10-01	-017	02	MS24665-132	27-24-05-01	-006	02
MS24665-132	22-10-10-01	-025	01	MS24665-132	27-30-05-01	-099	02
MS24665-132	22-10-10-01	-028	02	MS24665-132	27-30-05-01	-157	02
MS24665-132	22-10-10-01	-042	01	MS24665-132	27-30-05-01	-179	02
MS24665-132	22-10-10-02	-029	02	MS24665-132	27-30-05-01	-260	02
MS24665-132	27-10-30-01	-012	01	MS24665-132	27-30-05-01	-280	02
MS24665-132	27-10-30-01	-082	02	MS24665-132	27-31-00-01	-009	02
MS24665-132	27-10-30-01	-177	04	MS24665-132	27-36-00-01	-029	02
MS24665-132	27-10-50-01	-023	01	MS24665-132	27-60-00-01	-166	02
MS24665-132	27-10-50-01	-035	01	MS24665-132	27-60-00-01	-177	03
MS24665-132	27-10-50-01	-045	01	MS24665-132	27-60-20-01	-030	04
MS24665-132	27-10-50-01	-049	01	MS24665-132	27-60-20-01	-082	02
MS24665-132	27-10-50-01	-110	02	MS24665-132	27-60-20-01	-160	06
MS24665-132	27-10-50-01	-112	02	MS24665-132	27-60-30-01	-013	06
MS24665-132	27-10-50-01	-155	02	MS24665-132	27-60-30-01	-016	06
MS24665-132	27-10-50-01	-162	02	MS24665-132	27-60-30-01	-088	02
MS24665-132	27-10-50-01	-171	02	MS24665-132	27-60-30-01	-093	02
MS24665-132	27-10-50-01	-178	01	MS24665-132	27-60-30-01	-100	04
MS24665-132	27-10-50-01	-195	01	MS24665-132	27-80-10-01	-012	02
MS24665-132	27-10-50-01	-203	02	MS24665-132	27-80-10-01	-031	01
MS24665-132	27-10-50-01	-209	01	MS24665-132	32-30-00-01	-020	01
MS24665-132	27-10-50-01	-229	02	MS24665-132	32-31-05-01	-038	02
MS24665-132	27-10-50-01	-239	02	MS24665-132	32-35-00-01	-007A	01
MS24665-132	27-10-50-01	-245	01	MS24665-132	32-35-00-01	-022A	02
MS24665-132	27-10-50-01	-254	01	MS24665-132	32-35-00-01	-037A	02
MS24665-132	27-10-50-01	-267	03	MS24665-132	32-35-00-01	-082	01
MS24665-132	27-10-50-01	-307	01	MS24665-132	32-43-00-01	-038	01
MS24665-132	27-10-50-01	-322	01	MS24665-132	32-43-00-01	-153	01
MS24665-132	27-10-50-01	-329	01	MS24665-132	32-43-00-01	-157	01
MS24665-132	27-10-50-01	-335	02	MS24665-132	32-49-00-01	-083	01
MS24665-132	27-10-50-02	-094	01	MS24665-132	32-49-00-01	-088	02
MS24665-132	27-11-00-01	-082	01	MS24665-132	32-51-00-01	-027	02
MS24665-132	27-11-00-01	-089	01	MS24665-132	33-40-35-01	-035	01
MS24665-132	27-11-00-01	-092	02	MS24665-132	36-10-20-01	-044	04
MS24665-132	27-11-00-01	-097	01	MS24665-132	36-10-20-02	-102	01
MS24665-132	27-11-00-01	-156	02	MS24665-132	36-10-20-03	-022	02
MS24665-132	27-11-00-01	-162	01	MS24665-132	36-10-20-03	-093	01
MS24665-132	27-11-00-01	-169	01	MS24665-132	52-10-11-01	-026	03
MS24665-132	27-11-00-01	-180	01	MS24665-132	52-10-11-01	-091	02

© Cessna Aircraft Company

PART NUMBER	CH SEC SUBJ FIG	ITEM	REQ	PART NUMBER	CH SEC SUBJ FIG	ITEM	REQ
MS24665-132	52-10-13-01	-005	01	MS24665-134	27-32-00-01	-237	02
MS24665-132	52-30-20-01	-030	02	MS24665-134	27-33-25-01	-006	02
MS24665-132	52-30-20-01	-038	01	MS24665-134	27-36-00-01	-010	01
MS24665-132	52-30-20-01	-086	01	MS24665-134	27-36-00-01	-039	01
MS24665-132	52-40-11-01	-005	02	MS24665-134	27-60-00-01	-091	01
MS24665-132	52-40-23-01	-010	02	MS24665-134	27-60-00-01	-155	01
MS24665-132	52-40-25-01	-007	01	MS24665-134	32-10-00-01	-014	01
MS24665-132	52-40-51-01	-007	01	MS24665-134	32-10-00-01	-092	01
MS24665-132	52-40-51-01	-043	04	MS24665-134	32-30-00-01	-019	01
MS24665-132	56-15-00-01	-017	01	MS24665-134	32-30-00-01	-093	10
MS24665-132	57-60-00-01	-017	01	MS24665-134	32-31-05-01	-017	01
MS24665-132	71-10-00-01	-160	02	MS24665-134	32-31-05-01	-033	01
MS24665-134	22-10-10-02	-018	01	MS24665-134	32-43-00-01	-006	01
MS24665-134	22-10-10-02	-024	01	MS24665-134	32-43-00-01	-014	01
MS24665-134	27-10-30-01	-079	01	MS24665-134	32-43-00-01	-030	04
MS24665-134	27-10-30-01	-154	01	MS24665-134	32-43-00-01	-078	01
MS24665-134	27-10-30-01	-312	01	MS24665-134	32-45-00-01	-004	01
MS24665-134	27-10-30-01	-382	01	MS24665-134	32-49-00-01	-081	01
MS24665-134	27-10-50-01	-084	02	MS24665-134	52-10-11-01	-169	01
MS24665-134	27-10-50-01	-088	02	MS24665-134	52-10-11-01	-229	01
MS24665-134	27-10-50-01	-094	03	MS24665-134	52-10-11-01	-251	01
MS24665-134	27-10-50-01	-104	02	MS24665-134	52-30-20-01	-087	01
MS24665-134	27-13-00-01	-154	01	MS24665-134	53-20-03-01	-011	04
MS24665-134	27-13-00-01	-168	01	MS24665-136	27-20-00-01	-095	01
MS24665-134	27-13-00-01	-235	01	MS24665-136	32-10-30-01	-079	02
MS24665-134	27-13-05-01	-030	01	MS24665-136	32-10-30-01	-088	01
MS24665-134	27-13-05-01	-231	01	MS24665-136	32-20-00-02	-007	01
MS24665-134	27-20-00-01	-018	01	MS24665-136	32-31-05-01	-024	01
MS24665-134	27-20-00-01	-029	03	MS24665-136	32-31-25-01	-028	02
MS24665-134	27-20-00-01	-046	01	MS24665-136	52-10-11-01	-181	01
MS24665-134	27-20-00-01	-088	01	MS24665-136	55-40-00-01	-013	02
MS24665-134	27-20-00-01	-114	02	MS24665-136	57-70-00-01	-048	06
MS24665-134	27-20-00-01	-122	02	MS24665-136	57-70-00-01	-114	12
MS24665-134	27-20-00-01	-162	01	MS24665-151	32-10-30-01	-097	01
MS24665-134	27-20-00-01	-173	02	MS24665-151	32-43-00-01	-160	01
MS24665-134	27-20-00-01	-178	02	MS24665-151	52-10-03-01	-088	02
MS24665-134	27-20-00-01	-186	02	MS24665-151	52-10-03-01	-103	01
MS24665-134	27-20-00-01	-193	01	MS24665-151	52-10-03-01	-164	02
MS24665-134	27-20-05-01	-006	01	MS24665-151	55-20-00-01	-025	03
MS24665-134	27-20-05-01	-079	01	MS24665-151	57-60-00-01	-019	01
MS24665-134	27-20-05-01	-093	01	MS24665-153	25-10-01-03	-012	02
MS24665-134	27-20-05-01	-099	01	MS24665-153	27-21-00-01	-017	01
MS24665-134	27-20-05-01	-105	01	MS24665-153	27-24-15-01	-011	02
MS24665-134	27-20-05-01	-156	01	MS24665-153	52-10-03-01	-019	01
MS24665-134	27-20-05-01	-175	01	MS24665-153	52-10-03-01	-102	01
MS24665-134	27-20-05-02	-079	01	MS24665-153	52-10-21-01	-017	02
MS24665-134	27-20-05-02	-088	01	MS24665-153	52-10-21-01	-022	01
MS24665-134	27-20-15-01	-012	02	MS24665-153	52-10-21-01	-027	01
MS24665-134	27-24-10-01	-006	02	MS24665-153	52-10-21-01	-031	01
MS24665-134	27-24-10-01	-013	02	MS24665-153	52-10-21-01	-040	01
MS24665-134	27-26-00-01	-006	01	MS24665-153	52-10-21-01	-083	01
MS24665-134	27-30-05-01	-080	01	MS24665-153	52-10-21-01	-091	01
MS24665-134	27-30-05-01	-096	01	MS24665-153	52-10-21-01	-103	01
MS24665-134	27-30-05-01	-173	01	MS24665-153	52-10-21-01	-154	01
MS24665-134	27-30-05-01	-235	01	MS24665-153	52-10-21-01	-161	01
MS24665-134	27-30-05-01	-257	01	MS24665-153	52-10-22-01	-030	02
MS24665-134	27-30-05-01	-277	01	MS24665-153	52-10-22-01	-103	02
MS24665-134	27-32-00-01	-093	02	MS24665-153	52-10-22-01	-182	02
MS24665-134	27-32-00-01	-160	02	MS24665-153	52-10-22-01	-254	02
MS24665-134	27-32-00-01	-171	02	MS24665-153	52-10-22-02	-019	01
MS24665-134	27-32-00-01	-178	02	MS24665-153	52-10-22-02	-033	AR
MS24665-134	27-32-00-01	-184	01	MS24665-153	52-10-22-02	-080	02

© Cessna Aircraft Company

PART NUMBER	CH SEC SUBJ FIG	ITEM	REQ
MS24665-153	52-10-22-02	-153	02
MS24665-153	52-10-22-02	-164	01
MS24665-153	52-10-22-02	-255	02
MS24665-153	52-10-22-02	-321	02
MS24665-153	52-10-22-02	-327	01
MS24665-153	52-10-22-02	-389	02
MS24665-153	52-40-25-01	-017	02
MS24665-153	52-40-51-01	-019	04
MS24665-153	52-40-51-01	-025	01
MS24665-155	27-50-00-01	-080	01
MS24665-155	27-50-00-01	-155	01
MS24665-155	27-50-00-01	-230	01
MS24665-155	27-50-00-01	-305	01
MS24665-155	27-50-00-01	-380	01
MS24665-155	27-50-00-01	-455	01
MS24665-168	52-20-10-01	-011	01
MS24665-170	36-10-20-03	-083	01
MS24665-170	57-51-00-01	-094	01
MS24665-170	57-51-00-01	-164	02
MS24665-172	21-50-10-01	-026	02
MS24665-172	27-33-00-01	-021	01
MS24665-172	27-33-00-01	-079	01
MS24665-172	27-33-00-01	-084	01
MS24665-172	27-33-00-01	-089	01
MS24665-172	27-33-00-01	-094	01
MS24665-172	27-33-00-01	-099	02
MS24665-172	27-33-00-01	-105	02
MS24665-172	27-33-00-01	-155	01
MS24665-172	27-33-00-01	-176	02
MS24665-172	27-80-10-01	-005	08
MS24665-172	36-10-20-01	-031	02
MS24665-172	52-30-00-01	-024	01
MS24665-176	49-10-00-01	-020	04
MS24665-208	27-25-00-01	-086	01
MS24665-208	27-25-00-01	-124	01
MS24665-208	27-25-00-01	-157	01
MS24665-208	27-25-00-01	-186	01
MS24665-208	27-25-00-01	-258	01
MS24665-208	27-25-00-01	-262	01
MS24665-208	27-25-00-01	-315	01
MS24665-208	27-25-00-01	-319	01
MS24665-208	32-35-00-02	-042	01
MS24665-210	32-35-00-01	-007	01
MS24665-210	32-35-00-01	-022	02
MS24665-210	32-35-00-01	-037	02
MS24665-229	27-10-15-01	-167	01
MS24665-229	27-10-30-01	-087	01
MS24665-229	32-31-25-01	-020	01
MS24665-281	27-10-30-01	-538	02
MS24665-283	27-13-35-01	-007	02
MS24665-283	27-60-40-01	-008	02
MS24665-283	52-10-00-01	-078	02
MS24665-283	55-10-00-01	-022	01
MS24665-283	55-40-00-01	-081	03
MS24665-283	57-40-10-01	-331	32
MS24665-283	57-60-00-01	-018	01
MS24665-283	57-80-00-01	-027	01
MS24665-285	27-36-00-01	-082	02
MS24665-285	57-70-00-01	-049	06
MS24665-285	57-70-00-01	-115	04
MS24665-285	57-80-00-01	-083	02
MS24665-287	32-10-00-01	-100	01
MS24665-287	32-51-00-01	-156	01
MS24665-287	52-30-20-01	-006	01
MS24665-289	32-51-00-01	-157	01
MS24665-289	49-10-00-01	-007	03
MS24665-302	32-35-00-02	-037	01
MS24665-302	52-10-22-01	-022	01
MS24665-302	52-10-22-01	-094	01
MS24665-302	52-10-22-01	-170	01
MS24665-302	52-10-22-01	-244	01
MS24665-302	57-51-00-01	-011	02
MS24665-302	57-51-00-01	-093	03
MS24665-302	57-51-00-01	-165	02
MS24665-302	71-00-00-01	-006	02
MS24665-302	71-20-00-01	-014	02
MS24665-353	32-30-20-01	-010	02
MS24665-355	27-10-50-01	-312	01
MS24665-355	32-20-00-01	-005	02
MS24665-355	57-80-00-01	-005	02
MS24665-355	57-80-00-01	-160	04
MS24665-357	32-30-20-01	-005	01
MS24665-357	32-30-30-01	-008	01
MS24665-359	32-10-00-01	-117	02
MS24665-360	55-10-00-01	-004	02
MS24665-368	27-10-30-01	-393	01
MS24665-372	55-10-00-01	-018	02
MS24665-372	55-10-00-01	-028	03
MS24665-427	32-41-05-01	-004	01
MS24665-65	27-10-30-01	-305	12
MS24665-69	27-11-20-01	-013	01
MS24665-69	27-11-20-01	-018	01
MS24665-69	27-11-20-01	-032	02
MS24665-69	27-25-00-01	-110	01
MS24665-69	27-25-00-01	-167	01
MS24665-69	27-25-00-01	-273	01
MS24665-69	27-25-00-01	-330	01
MS24665-69	27-35-00-01	-081	01
MS24665-69	27-35-00-02	-014	01
MS24665-69	27-35-00-02	-021	02
MS24665-69	27-36-00-01	-046	01
MS24665-69	27-80-10-01	-018	01
MS24665-69	27-80-10-01	-040	01
MS24665-69	32-31-05-01	-016	01
MS24665-69	52-10-11-01	-243	02
MS24665-69	52-10-11-01	-256	02
MS24665-69	52-10-11-01	-259	01
MS24665-69	52-10-11-01	-264	01
MS24665-71	27-32-00-01	-009	02
MS24665-71	27-32-00-01	-019	02
MS24665-71	27-32-00-01	-027	01
MS24665-71	27-32-00-01	-086	03
MS24665-71	32-10-00-01	-008	01
MS24665-71	32-51-00-01	-006	02
MS24665-82	38-30-05-01	-011	01
MS24678-11	30-10-30-01	-020	04
MS24693-28B	33-10-25-01	-004	03
MS24693-28B	33-10-25-01	-007	02
MS24693-BB26	35-10-00-01	-010	04
MS24693-C11	21-60-00-01	-161	03
MS24693-C27	33-40-45-01	-003	06
MS24693-C27	33-40-55-01	-003	06
MS24693-C27	52-40-45-01	-007	04
MS24693-C273	28-21-00-01	-030	06

© Cessna Aircraft Company

PART NUMBER	CH SEC SUBJ FIG	ITEM	REQ	PART NUMBER	CH SEC SUBJ FIG	ITEM	REQ
MS24693-C275	23-11-20-01	-002	06	MS24694-C5	71-60-00-01	-026	08
MS24693-C51	21-60-00-01	-154	02	MS24694-C5	71-60-00-01	-028	25
MS24693-C51	23-15-00-01	-027	02	MS24694-C50	28-40-15-01	-004	04
MS24693-C51	33-40-45-01	-006	08	MS24694-C50	34-55-10-01	-003	04
MS24693-C52	33-40-20-01	-002	02	MS24694-C50	34-57-00-01	-085	04
MS24693-C53	33-40-20-01	-005	02	MS24694-C51	23-11-10-01	-010	06
MS24693-S1	21-23-20-01	-045	02	MS24694-C51	25-50-00-01	-093	04
MS24693-S1	27-50-00-02	-009	04	MS24694-C51	36-10-20-01	-004	19
MS24693-S1	33-10-20-01	-002	10	MS24694-C51	36-10-20-01	-008	05
MS24693-S1	33-10-20-01	-004	05	MS24694-C51	36-10-20-01	-012	13
MS24693-S1	33-10-20-01	-007	09	MS24694-C51	52-10-22-02	-239	01
MS24693-S1	33-10-20-01	-011	04	MS24694-C52	23-15-05-01	-020	04
MS24693-S1	33-10-20-01	-014	06	MS24694-C52	23-15-45-01	-003	04
MS24693-S24	25-50-15-01	-022	02	MS24694-C52	36-10-20-01	-003	08
MS24693-S249	56-15-00-01	-024	01	MS24694-C52	36-10-20-01	-013	04
MS24693-S25	21-28-00-01	-004	04	MS24694-C52	52-10-11-01	-154	10
MS24693-S25	25-10-05-01	-002	05	MS24694-C52	52-10-19-01	-039	02
MS24693-S26	21-30-00-01	-011	12	MS24694-C53	52-10-21-01	-105	04
MS24693-S26	23-15-00-01	-097	02	MS24694-C54	28-10-05-01	-005	12
MS24693-S26	27-10-50-01	-344	03	MS24694-C54	52-10-21-01	-002	04
MS24693-S26	33-40-25-01	-006	08	MS24694-C54	52-10-21-01	-107	02
MS24693-S27	33-30-30-01	-002	04	MS24694-C55	34-25-00-01	-006	04
MS24693-S27	33-50-00-01	-002	04	MS24694-C55	55-30-10-01	-044	16
MS24693-S272	21-25-00-02	-008	04	MS24694-C57	57-70-00-02	-077	01
MS24693-S273	49-40-05-01	-005	03	MS24694-C58	32-20-00-02	-151	04
MS24693-S274	34-15-05-01	-077	02	MS24694-C58	57-70-00-02	-003	02
MS24693-S28	23-70-00-01	-002	02	MS24694-C58	57-70-00-02	-018	01
MS24693-S28	27-50-20-01	-025	01	MS24694-C58	57-70-00-02	-108	01
MS24693-S28	52-40-19-01	-002	02	MS24694-C6	34-10-00-01	-020	06
MS24693-S28	55-40-00-01	-016	18	MS24694-C6	55-10-11-01	-003	14
MS24693-S29	52-40-19-01	-005	04	MS24694-C6	55-10-11-01	-009	14
MS24693-S3	27-26-00-01	-012	04	MS24694-C66	27-10-50-01	-002	03
MS24693-S3	27-36-00-01	-154	05	MS24694-C66	27-10-50-01	-011	03
MS24693-S30	56-13-00-01	-010	11	MS24694-C69	52-10-11-01	-101	02
MS24693-S4	21-23-20-01	-043	08	MS24694-C79	27-10-50-01	-007	03
MS24693-S49	24-60-10-01	-076	04	MS24694-C99	52-10-19-01	-038	02
MS24693-S49	24-60-10-02	-076	04	MS24694-S102	25-50-15-01	-039	01
MS24693-S50	27-40-00-01	-160	02	MS24694-S103	25-50-15-01	-038	03
MS24693-S51	24-50-05-01	-013	02	MS24694-S113	27-36-00-01	-157	04
MS24693-S9	34-20-00-01	-014	02	MS24694-S114	32-31-05-01	-002	02
MS24693B6	33-30-20-01	-004	03	MS24694-S12	52-10-31-01	-028	02
MS24693C28	52-40-37-01	-078	08	MS24694-S13	27-10-30-01	-317	01
MS24693C28	52-40-37-01	-227	08	MS24694-S2	28-23-00-01	-028	04
MS24693S26	25-50-00-01	-079	02	MS24694-S214	52-10-19-01	-170	01
MS24693S28	34-30-05-01	-002	16	MS24694-S3	25-50-00-01	-088	01
MS24694-C154	52-10-31-01	-115	01	MS24694-S3	55-30-00-03	-022	12
MS24694-C3	52-40-37-01	-041	02	MS24694-S3	55-30-00-03	-097	16
MS24694-C3	52-40-37-01	-190	02	MS24694-S3	57-40-00-02	-010	04
MS24694-C3	53-30-02-03	-169	18	MS24694-S4	55-10-00-01	-180	15
MS24694-C4	53-30-02-03	-093	12	MS24694-S49	53-30-02-03	-078	22
MS24694-C48	71-10-00-01	-077	24	MS24694-S5	23-15-00-01	-006	02
MS24694-C48	71-10-00-01	-080	AR	MS24694-S5	23-70-00-01	-009	04
MS24694-C49	34-57-00-01	-077	04	MS24694-S5	24-30-55-01	-008	04
MS24694-C49	52-20-00-01	-007	02	MS24694-S5	30-40-00-01	-020	08
MS24694-C5	49-10-15-01	-008	24	MS24694-S5	30-40-00-01A	-029	04
MS24694-C5	52-40-01-01	-016	04	MS24694-S5	31-30-00-01	-003	04
MS24694-C5	53-30-02-03	-002	AR	MS24694-S5	52-30-00-01	-036	02
MS24694-C5	55-10-00-01	-080	AR	MS24694-S5	54-60-00-01	-155	21
MS24694-C5	71-60-00-01	-003	AR	MS24694-S50	24-30-30-01	-015	01
MS24694-C5	71-60-00-01	-006	AR	MS24694-S50	25-50-00-01	-256	18
MS24694-C5	71-60-00-01	-017	34	MS24694-S50	27-40-00-01	-023	06
MS24694-C5	71-60-00-01	-022	08	MS24694-S50	55-10-00-01	-177	29

© Cessna Aircraft Company

PART NUMBER	CH SEC SUBJ FIG	ITEM	REQ
MS24694-S51	23-11-10-01	-002	06
MS24694-S51	30-10-00-01	-092	04
MS24694-S51	32-35-00-02	-004	02
MS24694-S51	36-10-20-03	-004	28
MS24694-S51	36-10-20-03	-098	03
MS24694-S51	55-10-00-01	-176	10
MS24694-S51	55-30-00-03	-017	AR
MS24694-S51	55-30-00-03	-092	AR
MS24694-S52	32-20-00-02	-104	02
MS24694-S52	36-10-20-03	-009	02
MS24694-S52	52-10-35-01	-017	04
MS24694-S52	55-10-00-03	-005	14
MS24694-S52	55-30-00-01	-015	07
MS24694-S52	55-30-00-01	-018	AR
MS24694-S52	55-30-00-01	-022	17
MS24694-S53	25-80-03-01	-002	02
MS24694-S53	25-80-03-01	-014	17
MS24694-S53	25-80-03-01	-040	04
MS24694-S53	25-80-03-01	-076	17
MS24694-S53	25-80-03-01	-104	02
MS24694-S53	25-80-03-01	-110	04
MS24694-S53	25-80-03-01	-113	04
MS24694-S53	27-36-00-01	-084	04
MS24694-S53	33-40-35-02	-006	04
MS24694-S53	52-10-09-01	-026	02
MS24694-S54	32-20-00-02	-105	02
MS24694-S55	34-53-00-01	-009	04
MS24694-S55	52-10-21-01	-006	02
MS24694-S56	52-10-37-01	-006	04
MS24694-S56	52-10-37-01	-097	04
MS24694-S57	52-10-37-01	-007	01
MS24694-S58	24-60-00-01	-051	03
MS24694-S58	52-40-01-01	-009	02
MS24694-S6	21-25-75-01	-010	05
MS24694-S6	21-25-75-01	-013	02
MS24694-S6	21-25-75-01	-076	17
MS24694-S6	21-25-75-01	-079	18
MS24694-S6	22-10-10-02	-034	03
MS24694-S6	23-13-00-01	-014	04
MS24694-S6	25-80-03-01	-005	02
MS24694-S6	25-80-03-01	-017	17
MS24694-S6	25-80-03-01	-044	07
MS24694-S6	25-80-03-01	-079	21
MS24694-S6	25-80-03-01	-116	07
MS24694-S6	34-10-20-01	-003	06
MS24694-S6	52-20-00-01	-013	04
MS24694-S6	52-40-37-01	-035	04
MS24694-S6	52-40-37-01	-184	04
MS24694-S6	55-10-00-01	-181	02
MS24694-S60	24-60-00-01	-052	02
MS24694-S60	25-50-00-01	-257	01
MS24694-S60	34-51-10-01	-003	04
MS24694-S63	27-25-00-02	-002	02
MS24694-S63	32-20-00-02	-021	02
MS24694-S63	32-20-00-02	-100	03
MS24694-S63	52-40-37-01	-013	03
MS24694-S63	52-40-37-01	-162	03
MS24694-S7	21-23-20-01	-007	02
MS24694-S7	21-23-20-01	-016	13
MS24694-S7	21-23-20-01	-025	04
MS24694-S7	53-30-03-02	-025	04
MS24694-S8	27-10-30-01	-467	04
MS24694-S8	27-10-30-01	-472	04
MS24694-S8	27-36-00-01	-018	02
MS24694-S9	27-36-00-01	-158	02
MS24694C53	53-21-00-01	-022	02
MS24694S114	32-31-25-01	-003	02
MS24694S3	52-10-31-01	-094	08
MS24694S57	52-10-31-01	-088	04
MS24694S57	52-10-31-01	-109	04
MS25081C4	32-61-00-01	-005	01
MS25081C4	32-61-00-01	-079	01
MS25082-3	52-10-11-01	-082A	01
MS25082-7	21-30-00-01	-021	AR
MS25082-7	21-60-00-01	-016	01
MS25082-7	49-40-00-01	-018	02
MS25082-8	21-60-00-01	-014	AR
MS25082-8	31-10-10-01	-011	AR
MS25082-8	31-10-20-01	-009	AR
MS25082-8	38-30-00-02	-005	02
MS25082-8	49-40-00-01	-014	AR
MS25082-C8	21-60-00-01	-005	01
MS25082B20	28-11-45-01	-003	01
MS25082B20	28-11-50-01	-003	01
MS25082B21	24-50-05-01	-010	01
MS25083-2AA6	52-40-11-01	-020	01
MS25083-2AB10	27-32-00-01	-185	01
MS25083-2AB10	52-40-07-01	-013	01
MS25083-2AB10	53-43-00-01	-028	01
MS25083-2AB7	27-21-00-01	-032	02
MS25083-2AB8	57-60-00-01	-080	02
MS25083-2BB10	55-10-00-01	-032	01
MS25083-2BB12	27-36-00-01	-203	02
MS25083-2BB12	52-40-37-01	-016	01
MS25083-2BB12	52-40-37-01	-165	01
MS25083-2BB14	28-20-05-01	-028	02
MS25083-2BB14	32-30-30-01	-011	02
MS25083-2BB5	27-50-00-01	-005	01
MS25083-2BB5	52-40-25-01	-011	01
MS25083-2BB5	52-40-51-01	-013	04
MS25083-2BB5	52-40-51-01	-032	04
MS25083-2BB6	53-23-00-03	-002	01
MS25083-2BB6	53-23-00-03	-011	03
MS25083-2BB6	53-23-00-03A	-013	02
MS25083-2BB6	53-23-00-03A	-020	02
MS25083-2BB6	55-40-00-01	-027	01
MS25083-2BB6	55-40-00-01	-101	01
MS25083-2BB7	27-20-00-01	-125	01
MS25083-2BB7	27-40-00-01	-028	01
MS25083-2BB7	53-23-00-03A	-004	02
MS25083-2BB7	55-20-00-01	-001	02
MS25083-2BB7	55-20-00-01	-005	06
MS25083-2BB8	32-20-00-02	-093	01
MS25083-2BB8	32-20-00-02	-152	01
MS25083-2BB8	53-23-00-03	-012	02
MS25083-2BB8	53-60-05-03	-011	02
MS25083-2BB9	27-20-00-01	-126	01
MS25083-2BB9	52-10-37-01	-021	01
MS25083-2CB10	27-80-10-01	-043	01
MS25083-2CC10	32-10-00-01	-001	02
MS25171-1S	26-20-15-01	-008	02
MS25171-1S	26-23-00-01	-015	01
MS25233-303	33-30-10-01	-013	01
MS25243-4594	33-40-35-01	-003	02

© Cessna Aircraft Company

PART NUMBER	CH SEC SUBJ FIG	ITEM	REQ
MS27039-0804	27-10-30-01	-401	01
MS27039-0805	21-28-00-01	-011	02
MS27039-0805	27-20-00-01	-127	01
MS27039-0805	33-40-50-01	-002	02
MS27039-0805	55-30-00-04	-117	02
MS27039-0805	57-40-00-02	-013	04
MS27039-0806	21-29-00-01	-011	06
MS27039-0806	30-20-00-02	-029	04
MS27039-0806	49-10-00-01	-021	16
MS27039-0806	53-15-00-02	-034	14
MS27039-0806	53-15-00-02	-098	22
MS27039-0806	53-15-00-02	-102	04
MS27039-0806	54-50-00-01	-202	04
MS27039-0806	54-50-00-01	-208	04
MS27039-0806	57-20-05-02	-003	01
MS27039-0806	57-20-05-02	-016	01
MS27039-0806	57-20-05-02	-077	01
MS27039-0806	57-20-05-02	-152	01
MS27039-0806	57-20-05-02	-155	02
MS27039-0807	27-30-05-01	-165	02
MS27039-0807	27-60-00-01	-159	02
MS27039-0807	33-50-05-01	-005	04
MS27039-0807	53-20-06-01	-035	05
MS27039-0807	53-21-00-02	-106	03
MS27039-0808	21-35-00-01	-090	04
MS27039-0808	23-13-00-01	-004	04
MS27039-0808	23-15-00-01	-012	04
MS27039-0808	23-15-05-01	-006	10
MS27039-0808	23-50-00-01	-004	04
MS27039-0808	24-20-25-01	-007	06
MS27039-0808	24-20-25-01	-010	06
MS27039-0808	24-30-00-01	-024	04
MS27039-0808	24-30-55-01	-007	22
MS27039-0808	24-60-15-01	-151	04
MS27039-0808	24-60-15-01	-226	04
MS27039-0808	25-50-00-01	-020	04
MS27039-0808	27-10-50-01	-230	01
MS27039-0808	27-21-00-01	-033	01
MS27039-0808	27-30-05-01	-010	02
MS27039-0808	27-32-00-01	-163	02
MS27039-0808	27-40-00-01	-100	08
MS27039-0808	27-40-00-01	-106	02
MS27039-0808	31-32-05-01	-004	04
MS27039-0808	31-40-05-01	-003	04
MS27039-0808	31-40-15-01	-004	04
MS27039-0808	32-43-00-01	-020	04
MS27039-0808	33-40-15-01	-003	06
MS27039-0808	33-40-15-01	-019	06
MS27039-0808	34-40-00-01	-005	17
MS27039-0808	34-59-00-01	-003	04
MS27039-0808	35-10-20-01	-034	02
MS27039-0808	35-10-20-01	-081	04
MS27039-0808	35-10-20-01	-105	09
MS27039-0808	35-10-20-01	-160	01
MS27039-0808	35-10-20-01	-174	01
MS27039-0808	52-10-13-01	-020	04
MS27039-0808	52-30-20-01	-016	02
MS27039-0808	52-40-15-01	-012	02
MS27039-0808	53-21-00-01	-118	03
MS27039-0809	23-15-00-01	-007	02
MS27039-0809	27-10-30-01	-479	04
MS27039-0809	27-11-00-01	-107	02
MS27039-0809	27-20-05-01	-252	03
MS27039-0809	31-20-00-01	-002	03
MS27039-0809	31-40-05-01	-009	04
MS27039-0809	32-20-00-02	-008	01
MS27039-0809	34-25-00-01	-015	02
MS27039-0809	34-53-00-01	-003	04
MS27039-0809	38-32-10-01	-025	10
MS27039-0809	53-21-00-01	-119	05
MS27039-0809	53-21-00-02	-104	03
MS27039-0809	53-23-00-03	-003	01
MS27039-0809	53-60-00-07	-011	01
MS27039-0809	53-60-00-07	-173	01
MS27039-0809	53-60-00-07	-256	01
MS27039-0809	53-60-00-07	-312	01
MS27039-0809	53-60-05-03	-012	01
MS27039-0809	55-30-00-04	-158	02
MS27039-0810	27-30-05-01	-016	02
MS27039-0810	27-30-05-01	-089	02
MS27039-0810	34-55-00-01	-005	04
MS27039-0810	35-10-20-01	-170	01
MS27039-0810	52-40-37-01	-022	02
MS27039-0810	52-40-37-01	-171	02
MS27039-0810	55-20-00-01	-002	01
MS27039-0810	55-20-00-01	-006	02
MS27039-0811	27-00-02-01	-002	03
MS27039-0811	27-00-02-01	-015	02
MS27039-0811	27-00-02-01	-116	04
MS27039-0811	27-00-02-01	-152	02
MS27039-0811	27-00-02-01	-169	04
MS27039-0811	27-00-02-01	-235	05
MS27039-0811	27-00-02-01	-253	03
MS27039-0811	27-20-05-02	-015	02
MS27039-0811	27-20-05-02	-019	02
MS27039-0811	33-40-35-02	-029	02
MS27039-0812	27-10-30-01	-005	01
MS27039-0812	27-10-30-01	-378	01
MS27039-0812	27-30-05-01	-227	01
MS27039-0813	27-00-02-01	-008	02
MS27039-0813	27-10-15-01	-177	03
MS27039-0813	27-36-00-01	-204	01
MS27039-0813	27-60-20-01	-090	03
MS27039-0813	56-15-00-01	-094	04
MS27039-0814	23-15-05-01	-004	04
MS27039-0814	24-30-00-01	-027	02
MS27039-0814	27-00-02-01	-016	02
MS27039-0814	27-00-02-01	-041	04
MS27039-0814	27-00-02-01	-086	03
MS27039-0814	27-00-02-01	-097	03
MS27039-0814	27-00-02-01	-111	02
MS27039-0814	27-00-02-01	-115	02
MS27039-0814	27-00-02-01	-165	04
MS27039-0814	27-00-02-01	-184	03
MS27039-0814	27-00-02-01	-239	02
MS27039-0814	27-00-02-01	-257	02
MS27039-0814	27-10-30-01	-409	03
MS27039-0814	27-20-05-02	-011	02
MS27039-0814	32-35-00-01	-028	04
MS27039-0814	32-43-00-01	-021	01
MS27039-0815	23-15-00-01	-077	06
MS27039-0815	27-00-02-01	-025	02
MS27039-0815	27-00-02-01	-034	02
MS27039-0815	27-00-02-01	-093	02

© Cessna Aircraft Company

PART NUMBER	CH SEC SUBJ FIG	ITEM	REQ	PART NUMBER	CH SEC SUBJ FIG	ITEM	REQ
MS27039-0815	27-00-02-01	-102	05	MS27039-1-06	37-10-00-01	-093	01
MS27039-0815	27-00-02-01	-117	01	MS27039-1-06	49-30-00-01	-017	04
MS27039-0815	27-00-02-01	-159	04	MS27039-1-06	49-30-00-01	-079	01
MS27039-0815	27-00-02-01	-174	04	MS27039-1-06	53-30-03-04	-012	AR
MS27039-0815	27-00-02-01	-226	03	MS27039-1-07	21-25-20-01	-003	01
MS27039-0815	27-00-02-01	-231	02	MS27039-1-07	24-60-40-01	-002	04
MS27039-0815	27-00-02-01	-245	02	MS27039-1-07	25-10-01-02	-004	04
MS27039-0815	27-00-02-01	-249	01	MS27039-1-07	25-10-01-02	-006	06
MS27039-0815	27-00-02-01	-268	02	MS27039-1-07	25-60-00-01	-004	04
MS27039-0815	27-10-15-01	-113	02	MS27039-1-07	27-60-00-01	-009	04
MS27039-0815	27-20-05-02	-003	01	MS27039-1-07	28-11-30-01	-016	01
MS27039-0815	27-20-05-02	-023	02	MS27039-1-07	28-11-30-01	-030	01
MS27039-0815	27-32-00-01	-079	03	MS27039-1-07	34-10-00-01	-014	01
MS27039-0815	27-35-00-01	-085	01	MS27039-1-07	34-10-00-01	-028	02
MS27039-0816	22-10-10-01	-035	02	MS27039-1-07	34-10-00-02	-014	01
MS27039-0816	27-00-02-01	-045	05	MS27039-1-07	34-10-00-02	-018	01
MS27039-0816	27-00-02-01	-076	05	MS27039-1-07	34-10-00-02	-021	02
MS27039-0816	27-00-02-01	-106	03	MS27039-1-07	34-10-00-02	-103	01
MS27039-0816	27-20-05-01	-084	02	MS27039-1-07	34-10-00-02	-107	01
MS27039-0816	27-20-05-01	-256	03	MS27039-1-07	34-10-00-02	-226	01
MS27039-0816	27-20-05-01	-263	02	MS27039-1-07	34-10-00-02	-229	07
MS27039-0816	27-20-05-01	-269	03	MS27039-1-07	34-31-00-01	-002	04
MS27039-0817	27-10-30-01	-403	04	MS27039-1-07	35-10-00-01	-083	02
MS27039-0817	32-49-00-01	-095	04	MS27039-1-07	35-10-00-01	-090	01
MS27039-0817	52-10-11-01	-160	02	MS27039-1-07	35-10-00-01	-092	01
MS27039-0818	55-20-00-01	-003	01	MS27039-1-07	35-10-20-01	-119	01
MS27039-0819	27-00-02-01	-180	04	MS27039-1-07	35-10-20-01	-127	02
MS27039-0820	27-20-05-01	-264	02	MS27039-1-07	35-20-00-01	-022	01
MS27039-0822	22-10-10-01	-031	03	MS27039-1-07	36-15-00-01	-037	03
MS27039-0822	55-40-00-02	-003	02	MS27039-1-07	36-15-00-02	-091	03
MS27039-0823	27-10-30-01	-318	01	MS27039-1-07	36-15-00-02	-168	04
MS27039-0824	27-00-02-01	-263	02	MS27039-1-07	36-15-00-03	-016	02
MS27039-1-04	25-70-00-01	-036	02	MS27039-1-07	37-10-00-01	-097	01
MS27039-1-04	33-40-15-01	-004	02	MS27039-1-07	37-10-00-01	-103	01
MS27039-1-04	33-40-15-01	-018	02	MS27039-1-07	37-10-00-01	-109	01
MS27039-1-05	52-30-40-01	-006	06	MS27039-1-07	52-10-00-01	-152	AR
MS27039-1-05	53-30-03-04	-010	AR	MS27039-1-07	52-10-00-01	-161	AR
MS27039-1-06	21-23-00-01	-152	01	MS27039-1-07	52-10-00-01	-164	24
MS27039-1-06	21-23-00-01	-161	01	MS27039-1-07	52-10-00-01	-167	03
MS27039-1-06	21-23-00-01	-166	01	MS27039-1-07	52-10-35-01	-078	02
MS27039-1-06	26-10-00-01	-016	01	MS27039-1-07	52-20-00-01	-002	02
MS27039-1-06	26-11-00-01	-003	01	MS27039-1-07	53-12-10-01	-012	04
MS27039-1-06	26-11-00-01	-010	01	MS27039-1-07	53-20-05-02	-017	AR
MS27039-1-06	26-23-00-01	-002	04	MS27039-1-07	53-43-00-01	-076	04
MS27039-1-06	27-20-05-01	-009	02	MS27039-1-07	55-30-00-04	-191	02
MS27039-1-06	27-24-05-01	-009	01	MS27039-1-08	21-26-00-01	-013	02
MS27039-1-06	29-10-80-01	-161	01	MS27039-1-08	22-10-30-01	-010	04
MS27039-1-06	29-10-80-01	-164	01	MS27039-1-08	23-15-00-01	-017	04
MS27039-1-06	29-10-80-01	-171	01	MS27039-1-08	24-20-20-01	-008	02
MS27039-1-06	32-49-00-01	-020C	01	MS27039-1-08	24-30-30-01	-002	02
MS27039-1-06	35-10-00-01	-085	01	MS27039-1-08	24-30-30-01	-004	02
MS27039-1-06	35-10-00-01	-099	01	MS27039-1-08	24-30-30-01	-006	02
MS27039-1-06	35-10-20-01	-038	01	MS27039-1-08	25-50-00-01	-245	03
MS27039-1-06	35-10-20-01	-044	01	MS27039-1-08	26-13-00-01	-002	04
MS27039-1-06	35-10-20-01	-082	04	MS27039-1-08	26-13-00-01	-004	06
MS27039-1-06	35-10-20-01	-128	02	MS27039-1-08	27-36-00-01	-195	08
MS27039-1-06	35-10-20-01	-179	01	MS27039-1-08	27-50-00-01	-014	01
MS27039-1-06	35-20-00-01	-018	01	MS27039-1-08	29-10-00-05	-331	01
MS27039-1-06	35-20-00-01	-026	01	MS27039-1-08	29-10-10-01	-089	04
MS27039-1-06	36-15-00-01	-039	02	MS27039-1-08	29-10-10-01	-236	12
MS27039-1-06	36-15-00-01	-091	11	MS27039-1-08	29-10-10-01	-241	01
MS27039-1-06	36-15-00-02	-031	04	MS27039-1-08	30-40-00-01A	-038	01

© Cessna Aircraft Company

PART NUMBER	CH SEC SUBJ FIG	ITEM	REQ	PART NUMBER	CH SEC SUBJ FIG	ITEM	REQ
MS27039-1-08	30-40-00-01A	-042	01	MS27039-1-09	34-10-05-01	-004	04
MS27039-1-08	31-40-10-01	-003	04	MS27039-1-09	34-25-00-01	-007	02
MS27039-1-08	32-35-00-02	-003	02	MS27039-1-09	34-40-00-01	-003	08
MS27039-1-08	33-50-05-01	-007	02	MS27039-1-09	35-10-00-01	-079	01
MS27039-1-08	33-50-05-01	-010	04	MS27039-1-09	35-10-00-01	-102	01
MS27039-1-08	34-10-00-02	-231	01	MS27039-1-09	35-10-00-01	-106	01
MS27039-1-08	35-10-00-01	-095	01	MS27039-1-09	35-10-20-01	-112	01
MS27039-1-08	35-20-00-01	-030	01	MS27039-1-09	52-20-10-01	-023	04
MS27039-1-08	36-15-00-01	-040	02	MS27039-1-09	52-30-00-01	-006	AR
MS27039-1-08	36-15-00-01	-092	10	MS27039-1-09	53-20-00-02A	-002	26
MS27039-1-08	36-15-00-02	-119	02	MS27039-1-09	53-20-00-02A	-009	36
MS27039-1-08	36-15-00-02	-167	01	MS27039-1-09	53-20-03-02	-020	03
MS27039-1-08	36-15-00-03	-037	03	MS27039-1-09	53-21-00-01	-020	10
MS27039-1-08	36-15-00-03	-102	05	MS27039-1-09	53-21-00-01	-036	29
MS27039-1-08	37-10-00-01	-100	01	MS27039-1-09	53-21-00-01	-185	16
MS27039-1-08	52-10-00-01	-184	08	MS27039-1-09	53-21-00-02	-101	08
MS27039-1-08	52-10-21-01	-167	02	MS27039-1-09	53-30-03-04	-016	01
MS27039-1-08	52-10-21-01	-170	01	MS27039-1-09	53-50-00-01	-173	03
MS27039-1-08	52-30-20-01	-009	02	MS27039-1-09	55-30-00-06	-012	02
MS27039-1-08	52-70-00-01	-006	02	MS27039-1-09	55-30-00-06	-016	02
MS27039-1-08	53-20-00-13	-003	07	MS27039-1-09	57-10-00-01	-043A	06
MS27039-1-08	53-20-04-01	-002	32	MS27039-1-09	76-10-00-01	-003	06
MS27039-1-08	53-20-05-01	-003	23	MS27039-1-09	76-10-00-01	-004	03
MS27039-1-08	53-20-05-01	-007	14	MS27039-1-10	23-15-00-01	-015	04
MS27039-1-08	53-20-05-01	-008	15	MS27039-1-10	25-50-15-01	-003	02
MS27039-1-08	53-20-05-01	-013	12	MS27039-1-10	25-60-00-01	-012	04
MS27039-1-08	53-20-05-01	-018	41	MS27039-1-10	27-60-20-01	-004	02
MS27039-1-08	53-20-05-01	-020	04	MS27039-1-10	27-60-20-01	-169	02
MS27039-1-08	53-20-05-01	-024	18	MS27039-1-10	27-60-30-01	-005	02
MS27039-1-08	53-21-00-01	-019	12	MS27039-1-10	27-60-30-01	-080	04
MS27039-1-08	53-21-00-01	-166	01	MS27039-1-10	32-43-00-02	-240	02
MS27039-1-08	53-30-02-01	-020	03	MS27039-1-10	34-10-00-02	-030	01
MS27039-1-08	53-30-03-04	-087	01	MS27039-1-10	34-10-00-02	-239	01
MS27039-1-08	53-30-06-02	-088	16	MS27039-1-10	34-15-05-01	-078	02
MS27039-1-08	53-30-06-02	-100	06	MS27039-1-10	34-20-00-01	-011	04
MS27039-1-08	53-42-03-01	-014	09	MS27039-1-10	34-57-00-01	-004	04
MS27039-1-08	55-30-00-01	-019	03	MS27039-1-10	35-20-00-01	-015	04
MS27039-1-08	55-30-10-01	-011	10	MS27039-1-10	36-15-00-01	-093	01
MS27039-1-08	71-70-00-01	-009	01	MS27039-1-10	52-10-00-01	-080	02
MS27039-1-08	71-70-00-01	-024	01	MS27039-1-10	52-10-03-01	-016	04
MS27039-1-08	73-10-00-01	-010	01	MS27039-1-10	52-10-22-02	-230	03
MS27039-1-08	73-10-00-01	-015	02	MS27039-1-10	52-10-22-02	-236	03
MS27039-1-08	73-10-00-01	-041	03	MS27039-1-10	52-10-22-02	-409	01
MS27039-1-08	73-10-00-02	-009	10	MS27039-1-10	52-30-00-01	-007	AR
MS27039-1-08	73-10-00-02	-013	01	MS27039-1-10	53-15-00-02	-118	07
MS27039-1-09	21-25-20-01	-032	02	MS27039-1-10	53-15-00-02	-205	07
MS27039-1-09	21-26-00-01	-002	04	MS27039-1-10	53-20-04-01	-003	04
MS27039-1-09	21-26-00-01	-008	04	MS27039-1-10	53-21-00-01	-082	01
MS27039-1-09	21-30-00-01	-002	04	MS27039-1-10	53-21-00-01	-116	02
MS27039-1-09	22-10-30-01	-003	04	MS27039-1-10	53-21-00-01	-167	11
MS27039-1-09	22-10-30-01	-007	04	MS27039-1-10	53-21-00-01	-171	01
MS27039-1-09	23-11-00-01	-003	04	MS27039-1-10	53-42-01-01	-004	256
MS27039-1-09	23-15-00-01	-003	04	MS27039-1-10	53-42-01-01	-098	14
MS27039-1-09	23-15-00-01	-092	02	MS27039-1-10	53-42-01-01	-101	16
MS27039-1-09	23-15-00-01	-094	11	MS27039-1-10	53-50-00-01	-164	04
MS27039-1-09	24-35-00-01	-077	01	MS27039-1-10	55-40-00-01	-028	01
MS27039-1-09	24-35-00-01	-086	01	MS27039-1-10	55-40-00-01	-102	01
MS27039-1-09	27-50-20-01	-031	06	MS27039-1-11	24-30-55-01	-005	04
MS27039-1-09	28-20-05-01	-029	01	MS27039-1-11	27-10-50-02	-035	20
MS27039-1-09	30-40-00-01A	-033	01	MS27039-1-11	27-24-00-01	-005	04
MS27039-1-09	31-40-10-01	-007	04	MS27039-1-11	34-10-00-02	-234	01
MS27039-1-09	34-10-00-02	-097	01	MS27039-1-11	34-57-00-01	-010	04

© Cessna Aircraft Company

PART NUMBER	CH SEC SUBJ FIG	ITEM	REQ
MS27039-1-11	52-10-00-01	-081	02
MS27039-1-11	52-10-03-01	-013	03
MS27039-1-11	52-10-21-01	-165	02
MS27039-1-11	52-10-21-01	-169	01
MS27039-1-11	52-10-22-02	-306	03
MS27039-1-11	52-10-22-02	-311	04
MS27039-1-11	52-10-35-01	-038	06
MS27039-1-11	52-11-00-01	-005	02
MS27039-1-11	53-21-00-02	-100	02
MS27039-1-11	53-30-03-02	-011	09
MS27039-1-12	23-15-00-01	-088	08
MS27039-1-12	23-15-00-01	-090	04
MS27039-1-12	24-30-30-01	-083	02
MS27039-1-12	27-00-02-01	-020	02
MS27039-1-12	52-10-22-02	-229	03
MS27039-1-12	52-10-22-02	-407	01
MS27039-1-12	52-40-37-01	-017	01
MS27039-1-12	52-40-37-01	-166	01
MS27039-1-13	35-10-00-01	-076	01
MS27039-1-13	49-30-00-01	-018	01
MS27039-1-13	52-30-00-01	-002	02
MS27039-1-13	52-40-01-01	-013	02
MS27039-1-13	52-40-11-01	-021	01
MS27039-1-13	52-40-25-01	-012	01
MS27039-1-13	52-40-51-01	-014	01
MS27039-1-13	52-40-51-01	-033	01
MS27039-1-13	53-10-01-01	-022	06
MS27039-1-14	36-15-00-02	-170	01
MS27039-1-14	52-10-19-01	-151	04
MS27039-1-14	52-10-22-02	-228	01
MS27039-1-15	27-10-30-01	-226	03
MS27039-1-15	27-10-30-01	-232	02
MS27039-1-15	27-13-00-01	-229	01
MS27039-1-15	32-43-00-02	-241	02
MS27039-1-15	35-10-00-01	-111	01
MS27039-1-15	35-10-20-01	-118	01
MS27039-1-15	36-15-00-01	-042	02
MS27039-1-15	36-15-00-02	-035	01
MS27039-1-15	52-11-00-01	-012	01
MS27039-1-15	52-11-00-01	-023	03
MS27039-1-16	24-40-05-01	-002	04
MS27039-1-16	27-40-00-01	-018	04
MS27039-1-16	30-10-20-01	-005	02
MS27039-1-16	32-35-00-01	-011	04
MS27039-1-16	32-35-00-02	-045	02
MS27039-1-16	32-49-00-01	-029	01
MS27039-1-16	36-15-00-01	-043	01
MS27039-1-16	36-15-00-03	-107	01
MS27039-1-16	52-10-19-01	-077	04
MS27039-1-17	24-20-25-01	-003	04
MS27039-1-17	32-33-00-01	-086	02
MS27039-1-17	32-49-00-01	-031	01
MS27039-1-17	34-47-00-01	-008	04
MS27039-1-17	53-10-01-01	-023	12
MS27039-1-18	21-23-00-01	-171	01
MS27039-1-18	32-49-00-01	-030	01
MS27039-1-18	32-49-00-03	-088	01
MS27039-1-18	36-15-00-02	-104	01
MS27039-1-19	30-40-00-01A	-023	02
MS27039-1-19	34-53-00-01	-006	02
MS27039-1-19	52-10-03-01	-005	01
MS27039-1-20	27-40-00-01	-017	02
MS27039-1-21	32-49-00-01	-027	01
MS27039-1-22	32-33-00-01	-085	01
MS27039-1-23	30-10-20-01	-004	02
MS27039-1-23	30-40-00-01	-014	02
MS27039-1-23	34-53-00-01	-007	02
MS27039-1-23	36-15-00-02	-034	01
MS27039-1-23	36-15-00-02	-169	01
MS27039-1-25	36-15-00-02	-032	02
MS27039-1-25	36-15-00-03	-040	02
MS27039-1-28	27-25-00-01	-100	02
MS27039-1-28	27-25-00-01	-173	02
MS27039-1-28	27-25-00-01	-244	02
MS27039-1-28	27-25-00-01	-301	02
MS27039-1-30	52-30-20-01	-101	01
MS27039-1-31	29-10-00-10	-037	04
MS27039-1-31	29-10-00-10	-086	06
MS27039-1-31	29-10-00-10	-159	04
MS27039-1-33	52-10-19-01	-079	02
MS27039-1-37	52-30-20-01	-096	01
MS27039-1-37	53-10-12-01	-006	08
MS27039-4-08	32-33-05-01	-010	02
MS27039-4-09	32-10-00-01	-002	01
MS27039-4-09	53-20-00-01	-009	04
MS27039-4-10	24-20-20-01	-003	04
MS27039-4-10	27-25-00-01	-112	01
MS27039-4-10	27-25-00-01	-176	01
MS27039-4-10	27-25-00-01	-247	01
MS27039-4-10	27-25-00-01	-304	01
MS27039-4-13	52-10-22-02	-408	01
MS27039C0804	38-30-05-01	-010	04
MS27039C0805	28-20-05-01	-018	12
MS27039C0805	53-43-00-01	-036	03
MS27039C0806	28-20-70-01	-011	02
MS27039C0806	28-21-00-01	-002	04
MS27039C0806	28-21-00-02	-304	03
MS27039C0806	28-21-00-02	-316	02
MS27039C0806	28-21-00-03	-099	04
MS27039C0806	34-50-05-01	-007	02
MS27039C0806	36-10-20-02	-025	04
MS27039C0806	36-10-20-04	-012	04
MS27039C0806	36-10-20-04	-020	02
MS27039C0806	52-11-00-01	-043	AR
MS27039C0806	53-30-02-03	-007	10
MS27039C0806	53-30-02-04	-076	49
MS27039C0806	53-30-02-04	-078	30
MS27039C0806	53-30-02-04	-083	13
MS27039C0806	53-30-02-04	-087	09
MS27039C0806	54-50-00-01	-052	03
MS27039C0806	54-50-00-01	-063	03
MS27039C0806	54-50-00-01	-138	06
MS27039C0806	80-10-00-01	-099	04
MS27039C0807	57-10-01-01	-004	12
MS27039C0807	57-10-01-01	-009	12
MS27039C0807	57-10-01-01	-014	12
MS27039C0807	57-10-01-01	-020	12
MS27039C0808	26-20-30-01	-016	04
MS27039C0808	28-21-00-02	-161	04
MS27039C0808	28-21-00-03	-185	03
MS27039C0808	38-30-00-01	-010	02
MS27039C0808	71-60-00-01	-014	02
MS27039C0809	38-30-10-01	-008	06
MS27039C0809	53-30-00-01	-032	16

© Cessna Aircraft Company

PART NUMBER	CH SEC SUBJ FIG	ITEM	REQ
MS27039C0809	57-10-01-01	-027	16
MS27039C0809	71-60-00-01	-009	12
MS27039C0810	53-23-00-03A	-003	07
MS27039C0810	53-23-00-03A	-012	07
MS27039C0810	53-23-00-03A	-016	10
MS27039C0811	32-51-00-01	-030	04
MS27039C0827	23-15-00-01	-080	06
MS27039C0838	21-50-10-01	-046	04
MS27039C0838	32-30-00-02	-124	01
MS27039C1-04	28-21-00-02	-301	03
MS27039C1-04	28-21-00-03	-181	03
MS27039C1-04	29-23-00-01	-154	04
MS27039C1-04	29-23-05-01	-079	06
MS27039C1-04	49-80-00-01	-005	15
MS27039C1-05	29-10-05-01	-010	04
MS27039C1-05	32-70-00-01	-017	03
MS27039C1-06	32-51-35-01	-004	01
MS27039C1-07	21-50-10-01	-040	16
MS27039C1-07	27-80-00-01	-012	01
MS27039C1-07	28-11-20-01	-156	01
MS27039C1-07	28-11-40-01	-088	02
MS27039C1-07	28-20-00-02	-007	01
MS27039C1-07	28-20-00-02	-027	01
MS27039C1-07	28-20-00-02	-033	01
MS27039C1-07	28-20-00-02	-087	01
MS27039C1-07	28-20-00-02	-116	01
MS27039C1-07	28-20-20-01	-013	04
MS27039C1-07	28-20-21-01	-003	03
MS27039C1-07	28-20-21-01	-008	01
MS27039C1-07	28-20-21-01	-018	01
MS27039C1-07	28-20-21-01	-080	01
MS27039C1-07	28-20-21-01	-097	01
MS27039C1-07	28-20-21-01	-104	01
MS27039C1-07	28-23-00-01	-006	01
MS27039C1-07	28-23-00-01	-032	03
MS27039C1-07	29-10-00-01	-011	02
MS27039C1-07	29-10-00-01	-080	02
MS27039C1-07	29-10-00-01	-155	02
MS27039C1-07	29-10-00-02	-008	04
MS27039C1-07	29-10-00-02	-032	01
MS27039C1-07	29-10-00-02	-088	02
MS27039C1-07	29-10-00-02	-165	01
MS27039C1-07	29-10-00-02	-171	01
MS27039C1-07	29-10-00-07	-165	01
MS27039C1-07	29-10-00-07	-168	01
MS27039C1-07	29-10-00-09	-079	AR
MS27039C1-07	29-10-00-09	-099	AR
MS27039C1-07	29-10-00-10	-016	01
MS27039C1-07	29-10-00-10	-192	01
MS27039C1-07	29-10-00-11	-029	03
MS27039C1-07	29-30-00-01	-005	01
MS27039C1-07	32-20-00-01	-013	02
MS27039C1-07	32-30-00-02	-025	05
MS27039C1-07	32-30-00-03	-040	01
MS27039C1-07	32-30-00-03	-091	01
MS27039C1-07	32-33-00-01	-162	02
MS27039C1-07	32-33-00-01	-234	01
MS27039C1-07	32-33-00-01	-304	05
MS27039C1-07	32-43-00-02	-081	01
MS27039C1-07	32-45-00-01	-010	02
MS27039C1-07	32-45-00-01	-017	01
MS27039C1-07	32-45-00-01	-020	01

PART NUMBER	CH SEC SUBJ FIG	ITEM	REQ
MS27039C1-07	32-49-00-02	-014	03
MS27039C1-07	32-49-00-02	-086	07
MS27039C1-07	32-51-00-01	-120	02
MS27039C1-07	52-10-19-01	-016	01
MS27039C1-07	53-30-02-04	-003	08
MS27039C1-07	53-30-02-04	-015	06
MS27039C1-07	53-30-02-04	-018	04
MS27039C1-07	53-30-02-04	-021	06
MS27039C1-07	53-30-02-04	-023	04
MS27039C1-07	53-30-02-04	-025	06
MS27039C1-07	53-30-02-04	-029	04
MS27039C1-07	53-30-02-04	-081	08
MS27039C1-07	78-30-10-01	-098	02
MS27039C1-07	78-30-10-02	-003	01
MS27039C1-07	78-30-10-02	-013	01
MS27039C1-07	78-30-10-02	-023	01
MS27039C1-08	24-20-10-01	-005	04
MS27039C1-08	28-11-20-01	-167	03
MS27039C1-08	29-10-00-04	-020	02
MS27039C1-08	29-10-00-04	-031	01
MS27039C1-08	29-10-00-04	-043	01
MS27039C1-08	29-10-00-04	-101	01
MS27039C1-08	29-10-00-04	-108	01
MS27039C1-08	29-10-00-04	-155	02
MS27039C1-08	29-10-00-05	-187	01
MS27039C1-08	29-10-00-05	-245	01
MS27039C1-08	29-10-00-05	-320	01
MS27039C1-08	29-10-00-06	-035	07
MS27039C1-08	29-10-00-06	-194	02
MS27039C1-08	29-10-00-08	-018	01
MS27039C1-08	29-10-00-08	-079	03
MS27039C1-08	29-21-00-01	-018	01
MS27039C1-08	30-20-00-01	-027	01
MS27039C1-08	32-20-00-01	-012	06
MS27039C1-08	32-30-00-02	-194	02
MS27039C1-08	32-30-00-03	-041	01
MS27039C1-08	32-33-00-01	-019	02
MS27039C1-08	32-33-00-01	-031	01
MS27039C1-08	32-33-00-01	-103	02
MS27039C1-08	32-33-00-01	-233	02
MS27039C1-08	32-33-05-01	-006	02
MS27039C1-08	32-43-00-02	-015	01
MS27039C1-08	32-49-00-01	-040	01
MS27039C1-08	32-49-00-02	-087	01
MS27039C1-08	32-51-05-01	-100	01
MS27039C1-08	32-51-35-01	-006	03
MS27039C1-09	28-11-20-01	-178	10
MS27039C1-09	28-20-00-03	-082	02
MS27039C1-09	28-20-20-01	-002	04
MS27039C1-09	29-10-00-05	-007	01
MS27039C1-09	29-10-00-05	-017	02
MS27039C1-09	29-10-00-05	-031	02
MS27039C1-09	29-10-00-05	-081	01
MS27039C1-09	29-10-00-05	-105	01
MS27039C1-09	29-10-00-05	-107	02
MS27039C1-09	29-10-00-05	-194	01
MS27039C1-09	29-10-00-05	-247	02
MS27039C1-09	29-10-00-06	-037	01
MS27039C1-09	29-10-00-07	-013	01
MS27039C1-09	29-10-00-10	-080	01
MS27039C1-09	29-10-00-10	-097	01
MS27039C1-09	29-10-80-01	-034	02

© Cessna Aircraft Company

PART NUMBER	CH SEC SUBJ FIG	ITEM	REQ
MS27039C1-09	29-10-80-01	-104	01
MS27039C1-09	29-23-00-01	-009	03
MS27039C1-09	29-23-00-01	-165	01
MS27039C1-09	29-23-00-01	-169	01
MS27039C1-09	29-23-05-01	-161	01
MS27039C1-09	32-20-00-02	-160	02
MS27039C1-09	32-30-00-02	-112	01
MS27039C1-09	32-30-00-02	-194A	01
MS27039C1-09	32-33-00-01	-004	02
MS27039C1-09	32-33-00-01	-392	07
MS27039C1-09	32-33-05-01	-002	02
MS27039C1-09	32-35-00-01	-089	01
MS27039C1-09	32-43-00-02	-016	01
MS27039C1-09	32-43-00-02	-170	02
MS27039C1-09	32-43-00-02	-192	08
MS27039C1-09	32-45-00-01	-008	04
MS27039C1-09	32-47-00-01	-026	02
MS27039C1-09	32-49-00-01	-026	01
MS27039C1-09	32-49-00-02	-088	01
MS27039C1-09	32-49-00-03	-006	01
MS27039C1-09	32-49-00-03	-015	03
MS27039C1-09	32-49-00-03	-086	01
MS27039C1-09	32-51-05-01	-022	01
MS27039C1-09	34-40-00-01	-017	04
MS27039C1-09	49-10-00-01	-013	01
MS27039C1-09	49-80-00-01	-015	01
MS27039C1-09	53-10-10-01	-018	02
MS27039C1-09	53-42-02-01	-005	02
MS27039C1-09	57-10-00-01	-043	06
MS27039C1-09	78-30-10-01	-103	02
MS27039C1-09	78-30-10-02	-031	01
MS27039C1-10	28-11-20-01	-179	10
MS27039C1-10	29-10-00-05	-021	02
MS27039C1-10	29-10-00-07	-031	02
MS27039C1-10	29-10-00-10	-077	01
MS27039C1-10	29-10-00-10	-096	01
MS27039C1-10	29-23-00-01	-010	02
MS27039C1-10	29-23-00-01	-241	01
MS27039C1-10	29-23-05-01	-077	02
MS27039C1-10	32-30-00-03	-042	01
MS27039C1-10	32-30-00-03	-088	01
MS27039C1-10	32-33-00-01	-165	03
MS27039C1-10	32-45-00-01	-028	04
MS27039C1-10	32-49-00-02	-015	01
MS27039C1-10	32-49-00-03	-087	01
MS27039C1-10	32-51-05-01	-016	01
MS27039C1-10	34-50-05-01	-006	08
MS27039C1-10	38-30-15-01	-025	04
MS27039C1-10	78-30-10-01	-004	03
MS27039C1-10	78-30-10-02	-076	03
MS27039C1-11	28-20-00-02	-034	01
MS27039C1-11	28-20-00-02	-122	01
MS27039C1-11	29-10-00-06	-038	01
MS27039C1-11	29-10-00-06	-195	02
MS27039C1-11	29-23-00-01	-007	01
MS27039C1-11	32-33-00-01	-164	01
MS27039C1-11	32-35-00-01	-088	01
MS27039C1-11	32-50-25-01	-003	01
MS27039C1-11	32-51-05-01	-030	01
MS27039C1-11	32-51-25-01	-003	01
MS27039C1-12	29-10-00-06	-036	04
MS27039C1-12	29-10-00-11	-090	02
MS27039C1-12	32-30-00-03	-044A	01
MS27039C1-12	32-35-00-02	-020	02
MS27039C1-12	32-35-00-02	-027	01
MS27039C1-12	32-47-05-01	-003	04
MS27039C1-12	32-51-00-01	-110	01
MS27039C1-13	29-10-00-04	-103	01
MS27039C1-13	29-10-00-05	-029	01
MS27039C1-13	29-10-00-11	-107	01
MS27039C1-13	29-10-00-11	-155	01
MS27039C1-13	29-10-00-11	-178	01
MS27039C1-13	32-33-00-01	-163	03
MS27039C1-13	32-33-00-01	-235	01
MS27039C1-13	32-43-00-02	-017	01
MS27039C1-13	32-49-00-02	-016	03
MS27039C1-13	32-49-00-02	-089	02
MS27039C1-13	36-15-00-02	-036	01
MS27039C1-14	25-60-00-01	-022	06
MS27039C1-14	27-24-05-01	-012	02
MS27039C1-14	29-10-00-04	-320	01
MS27039C1-14	29-10-00-08	-058	01
MS27039C1-14	29-10-00-09	-095	AR
MS27039C1-14	29-10-00-11	-102	01
MS27039C1-14	29-10-00-11	-108	01
MS27039C1-14	29-23-00-01	-011	01
MS27039C1-14	29-23-00-01	-096	01
MS27039C1-14	29-23-00-01	-316	01
MS27039C1-14	32-43-00-02	-018	01
MS27039C1-14	32-43-00-02	-082	01
MS27039C1-14	38-30-15-01	-018	08
MS27039C1-15	29-10-00-11	-172	01
MS27039C1-15	29-10-00-11	-234	01
MS27039C1-15	29-10-80-01	-030	01
MS27039C1-15	32-43-00-02	-193	01
MS27039C1-15	32-49-00-03	-016	01
MS27039C1-15	32-51-00-01	-102	01
MS27039C1-15	34-47-00-01	-020	04
MS27039C1-16	29-10-00-06	-196	01
MS27039C1-16	32-30-00-02	-115	01
MS27039C1-16	32-51-00-01	-116	01
MS27039C1-16	78-30-10-02	-026	01
MS27039C1-17	29-10-00-01	-171	01
MS27039C1-17	29-10-00-07	-032	02
MS27039C1-17	29-23-00-01	-008	03
MS27039C1-17	32-49-00-02	-017	02
MS27039C1-18	29-10-00-05	-025	01
MS27039C1-18	29-10-00-05	-109	01
MS27039C1-18	29-10-00-08	-062	01
MS27039C1-18	32-30-00-02	-113	01
MS27039C1-18	32-30-00-03	-039	01
MS27039C1-18	32-33-00-01	-166	01
MS27039C1-18	32-33-00-01	-236	02
MS27039C1-18	32-43-00-02	-194	01
MS27039C1-18	32-49-00-02	-018	01
MS27039C1-19	29-10-00-01	-172	01
MS27039C1-19	29-10-00-08	-063	01
MS27039C1-19	32-30-00-03	-043	01
MS27039C1-20	29-10-00-01	-012	01
MS27039C1-20	29-10-00-04	-305	01
MS27039C1-20	29-10-00-05	-093	01
MS27039C1-20	32-30-00-02	-111	02
MS27039C1-20	32-30-00-02	-114	01
MS27039C1-20	32-30-00-02	-194B	01

© Cessna Aircraft Company

PART NUMBER	CH SEC SUBJ FIG	ITEM	REQ	PART NUMBER	CH SEC SUBJ FIG	ITEM	REQ
MS27039C1-20	71-70-00-01	-033	02	MS27646-39	27-25-00-01	-308	02
MS27039C1-21	32-30-00-03	-044	01	MS27646-40	27-10-15-01	-226	01
MS27039C1-21	32-51-05-01	-024	02	MS27646-40	27-10-15-01	-238	01
MS27039C1-22	29-10-00-11	-230	01	MS27646-41	27-10-50-01	-105	04
MS27039C1-23	29-10-00-04	-329	01	MS27646-41	27-31-00-01	-020	01
MS27039C1-23	29-10-00-05	-103	01	MS27646-41	27-31-00-01	-029	01
MS27039C1-23	32-20-00-01	-019	01	MS27646-41	27-36-00-01	-159	01
MS27039C1-23	32-30-00-02	-110	01	MS27646-44	27-36-00-01	-185	01
MS27039C1-23	32-33-00-01	-237	02	MS27647-4	27-11-00-01	-261	01
MS27039C1-23	32-45-00-01	-017A	01	MS27647-6	27-10-30-01	-394	01
MS27039C1-23	36-15-00-02	-033	01	MS27648-16	27-33-00-01	-012	01
MS27039C1-24	29-10-00-11	-085	01	MS27648-21	27-25-00-01	-013	01
MS27039C1-24	29-10-00-11	-182	01	MS27648-29	27-25-00-01	-014	01
MS27039C1-25	36-15-00-02	-037	01	MS27975-1	32-35-00-01	-017	01
MS27039C1-31	29-10-00-05	-098	01	MS27975-1	32-35-00-01	-033	01
MS27039C1-31	29-10-00-05	-190	01	MS27975-2	32-35-00-01	-017A	01
MS27039C1-33	32-33-00-01	-021	01	MS27975-2	32-35-00-01	-033A	01
MS27039C1-48	29-10-00-06	-047	02	MS27980-1B	27-36-00-01	-196	05
MS27039C1-48	29-10-00-08	-049	04	MS27980-6B	27-36-00-01	-197	05
MS27039DD0806	54-50-00-01	-189	AR	MS27980-7B	27-36-00-01	-198	05
MS27039DD1-06	28-20-00-03	-179	02	MS27980-8B	27-36-00-01	-199	05
MS27212-5-2	24-30-30-01	-075	01	MS27994-1	52-70-50-01	-008	04
MS27640-4	27-10-50-01	-028	01	MS28034-1	21-25-00-02	-032	01
MS27640-5	27-10-50-02	-095	01	MS28034-1	21-25-00-02	-033	01
MS27641-12	27-36-00-01	-091	01	MS28034-3	28-40-20-01	-001	01
MS27641-3	27-10-50-01	-204	02	MS28034-3	28-40-20-01	-002	01
MS27641-3	27-32-00-01	-028	02	MS28773-04	29-10-00-02	-036	01
MS27641-4	27-10-50-01	-173	01	MS28773-04	29-10-00-08	-014B	01
MS27641-4	27-20-00-01	-031	02	MS28773-04	29-10-00-12	-187	04
MS27641-4	27-32-00-01	-232	02	MS28773-04	29-10-00-12	-257	01
MS27641-4	55-20-00-03	-006	01	MS28773-04	29-10-00-12	-257A	02
MS27641-6	55-10-00-01	-156	01	MS28773-04	29-10-00-12	-333	04
MS27641-6	55-10-00-01	-230	01	MS28773-04	29-10-10-01	-077	01
MS27641-6	55-30-00-02	-176	01	MS28773-04	29-10-10-01	-227	01
MS27641-6	55-30-00-02	-199	01	MS28773-04	29-21-00-01	-015	01
MS27641-6	55-30-00-02	-233	01	MS28773-04	29-23-00-01	-177	01
MS27641-6	55-30-00-02	-242	01	MS28773-04	29-23-00-01	-312	01
MS27641-6	57-60-00-01	-094	02	MS28773-04	29-23-00-01	-380	01
MS27641-8	27-10-30-01	-461	02	MS28773-04	32-33-00-01	-078	02
MS27641-8	55-30-00-02	-154	01	MS28773-04	32-51-00-01	-080	02
MS27641-8	57-60-00-01	-033	02	MS28773-04	32-51-05-01	-094	02
MS27642-16	27-32-00-01	-077	01	MS28773-06	29-10-00-11	-013	04
MS27642-16	27-32-00-01	-087	01	MS28773-06	32-30-00-02	-155	04
MS27644-4	27-25-00-01	-117	01	MS28773-06	32-30-00-03	-014	01
MS27644-4	27-25-00-01	-189	01	MS28773-06	32-30-00-03	-023	02
MS27644-4	27-25-00-01	-266	01	MS28773-06	32-30-00-03	-033	01
MS27644-4	27-25-00-01	-323	01	MS28773-06	32-31-25-01	-006	02
MS27645-3	27-25-00-01	-118	02	MS28773-06	78-30-10-01	-076	01
MS27645-3	27-25-00-01	-190	02	MS28773-06	78-30-10-02	-082	01
MS27645-3	27-25-00-01	-267	02	MS28773-06	78-30-10-02	-086	01
MS27645-3	27-25-00-01	-324	02	MS28773-08	29-10-10-01	-007	01
MS27645-3A	27-10-50-01	-014	01	MS28773-08	29-10-10-01	-160	01
MS27645-3A	27-10-50-01	-257	01	MS28773-08	29-21-00-01	-023	01
MS27645-3A	27-10-50-01	-302	01	MS28773-08	32-51-05-01	-010	01
MS27645-6A	27-20-00-01	-015	01	MS28773-10	29-10-00-01	-016	01
MS27645-6A	27-20-00-01	-026	01	MS28773-10	29-10-00-02	-012	01
MS27646-38	27-10-50-01	-301	02	MS28773-10	29-10-00-04	-314	01
MS27646-38	27-10-50-02	-187	02	MS28773-10	29-10-00-06	-095	02
MS27646-38	27-11-00-01	-244	02	MS28773-12	29-10-00-04	-227	01
MS27646-39	27-25-00-01	-088	02	MS28773-12	29-10-00-06	-091	01
MS27646-39	27-25-00-01	-159	02	MS28773-16	29-10-10-01	-017	01
MS27646-39	27-25-00-01	-251	02	MS28774-130	29-10-30-01	-080	01

© Cessna Aircraft Company

PART NUMBER	CH SEC SUBJ FIG	ITEM	REQ
MS28774-130	29-10-30-01	-155	01
MS28774-132	29-10-30-01	-087	01
MS28774-211	29-10-30-01	-007	01
MS28774-211	29-10-30-01	-161	01
MS28774-211	29-10-30-01	-167	01
MS28774-211	29-10-30-01	-230	01
MS28775-022	28-20-00-01	-014	02
MS28775-022	57-10-02-01	-426	02
MS28775-114	52-10-13-01	-025	01
MS28775-139	52-10-31-01	-026	01
MS28775-231	38-30-15-01	-021	01
MS28778-4	27-40-00-01	-082	01
MS28778-4	27-40-00-01	-095	01
MS28778-6	34-10-00-01	-025	01
MS28778-6	52-11-25-01	-002	01
MS28778-8	52-11-25-01	-005	01
MS28889-2	32-51-05-01	-027	01
MS29512-02	49-10-20-01	-014	01
MS29512-04	21-31-00-01	-005	01
MS29512-04	21-33-00-01	-014	04
MS29512-04	21-33-00-01	-018	02
MS29512-04	21-35-00-01	-034	01
MS29512-04	21-35-00-01	-088	01
MS29512-04	28-11-20-01	-036	02
MS29512-04	28-20-40-01	-003	02
MS29512-04	28-20-45-01	-003	02
MS29512-04	28-21-00-01	-006	03
MS29512-04	28-21-00-02	-213	01
MS29512-04	28-21-00-02	-278	01
MS29512-04	28-21-00-02	-308	01
MS29512-04	28-21-00-03	-190	04
MS29512-04	28-40-20-01	-003	02
MS29512-04	49-10-20-01	-004	01
MS29512-04	71-70-00-01	-037	01
MS29512-04	80-10-00-01	-080	01
MS29512-05	21-35-00-01	-006	02
MS29512-05	21-35-00-01	-037	01
MS29512-06	28-10-10-01	-012	02
MS29512-06	28-20-00-03	-091	02
MS29512-06	28-20-70-01	-007	02
MS29512-06	28-21-00-01	-011	02
MS29512-06	28-21-00-02	-268	06
MS29512-06	28-21-00-02	-274	01
MS29512-06	28-21-00-02	-312	02
MS29512-06	28-21-00-03	-014	02
MS29512-06	37-10-00-01	-009	01
MS29512-06	37-10-00-01	-088	01
MS29512-06	49-30-00-01	-086	01
MS29512-08	28-20-00-02	-098	02
MS29512-10	28-20-00-02	-017	02
MS29512-10	28-20-00-02	-023	06
MS29512-10	28-20-00-02	-107	02
MS29512-10	73-10-00-01	-003	01
MS29512-10	73-10-00-02	-026	01
MS29512-12	28-20-00-02	-100	02
MS29512-12	28-20-30-01	-030	02
MS29512-12	73-10-00-01	-008	01
MS29512-12	73-10-00-02	-029	01
MS29512-16	28-20-00-02	-094	02
MS29512-4	49-30-00-01	-004	02
MS29512-8	73-10-00-01	-025	01
MS29512-8	73-10-00-02	-024	01

PART NUMBER	CH SEC SUBJ FIG	ITEM	REQ
MS29513-007	28-10-10-01	-004	01
MS29513-011	28-21-00-03	-192	04
MS29513-017	28-11-30-01	-010	08
MS29513-017	28-20-00-03	-153	16
MS29513-017	28-20-20-01	-008	08
MS29513-017	28-20-21-01	-100	08
MS29513-017	28-20-30-01	-032	08
MS29513-021	28-10-10-01	-008	06
MS29513-026	28-11-30-01	-012	02
MS29513-026	28-20-00-03	-155	02
MS29513-026	28-20-21-01	-076	06
MS29513-028	28-40-15-01	-005	01
MS29513-030	28-11-20-01	-018	02
MS29513-030	28-11-20-01	-106	02
MS29513-030	28-20-00-02	-011	02
MS29513-030	28-20-00-03	-165	03
MS29513-030	28-21-00-03	-107	02
MS29513-032	28-11-10-01	-078	02
MS29513-032	28-20-21-01	-083	06
MS29513-035	28-11-20-01	-187	02
MS29513-039	28-11-20-01	-151	02
MS29513-039	28-21-00-01	-095	01
MS29513-117	28-11-10-01	-174	08
MS29513-124	28-20-30-01	-007	02
MS29513-124	28-20-30-01	-023	02
MS29513-124	28-20-30-01	-081	02
MS29513-124	28-23-00-01	-017	04
MS29513-139	28-21-00-01	-037	01
MS29513-144	28-20-30-01	-006	01
MS29513-144	28-20-30-01	-022	01
MS29513-144	28-20-30-01	-080	01
MS29513-144	28-23-00-01	-019	01
MS29513-153	28-21-00-01	-029	01
MS29513-163	28-21-00-01	-031	01
MS29513-214	28-11-10-01	-157	AR
MS29513-214	28-11-20-01	-010	AR
MS29513-214	28-11-20-01	-078	AR
MS29513-214	28-20-00-01	-012	08
MS29513-214	28-20-00-02	-003	16
MS29513-214	28-20-00-02	-92	04
MS29513-214	28-20-00-03	-011	04
MS29513-214	28-20-00-03	-019	04
MS29513-214	28-20-00-03	-028	08
MS29513-214	28-20-00-03	-160	24
MS29513-214	28-20-05-01	-026	02
MS29513-214	28-20-30-01	-015	08
MS29513-214	28-20-30-01	-090	08
MS29513-214	28-21-00-02	-099	04
MS29513-214	28-21-00-02	-102	02
MS29513-214	28-21-00-02	-166	04
MS29513-214	28-23-00-01	-009	AR
MS29513-218	28-11-10-01	-010	AR
MS29513-218	28-11-10-01	-089	AR
MS29513-218	28-11-10-01	-171	08
MS29513-218	28-20-00-03	-008	04
MS29513-218	28-20-20-01	-010	08
MS29513-218	28-20-21-01	-014	AR
MS29513-218	28-20-21-01	-153	AR
MS29513-218	28-21-00-02	-168	08
MS29513-218	28-21-00-02	-172	03
MS29513-218	28-21-00-03	-022	16
MS29513-222	28-11-20-01	-183	20

© Cessna Aircraft Company

PART NUMBER	CH SEC SUBJ FIG	ITEM	REQ	PART NUMBER	CH SEC SUBJ FIG	ITEM	REQ
MS29513-222	28-20-20-01	-020	04	MS35190-237	52-10-35-01	-016	01
MS29513-222	28-21-00-02	-195	04	MS35206-212	23-50-20-01	-003	02
MS29513-222	28-21-00-02	-210	02	MS35206-213	24-60-25-01	-013	02
MS29513-225	28-20-00-03	-085	02	MS35206-213	24-60-25-01	-027	02
MS29513-226	28-11-20-01	-163	16	MS35206-213	24-60-35-01	-012	02
MS29513-226	28-21-00-01	-093	04	MS35206-213	24-60-35-01	-026	02
MS29513-226	28-21-00-02	-170	04	MS35206-213	25-60-00-01	-030	02
MS29513-226	28-21-00-02	-232	06	MS35206-213	33-40-30-01	-003	02
MS29513-230	28-20-00-01	-003	04	MS35206-213	34-25-00-01	-013	04
MS29513-230	28-20-00-02	-082	08	MS35206-213	52-10-31-01	-024	04
MS29513-235	21-35-00-01	-011	01	MS35206-214	23-15-00-01	-084	02
MS29513-243	21-33-00-01	-011	02	MS35206-214	24-30-30-01	-036	02
MS29513-245	28-10-05-01	-008	02	MS35206-214	24-60-05-01	-017	04
MS29513-30	28-20-00-03	-013	01	MS35206-214	24-60-05-02	-017	04
MS29526-2	28-21-00-01	-027	01	MS35206-214	24-60-35-01	-015	02
MS3115-8L	24-30-30-01	-034	02	MS35206-214	24-60-35-01	-029	02
MS3181-14NAL	24-30-30-01	-037	02	MS35206-214	33-30-10-01	-012	04
MS3186C113B	27-20-00-01	-099	02	MS35206-215	24-60-10-01	-033	04
MS3341-1-9	38-30-10-01	-010	03	MS35206-215	24-60-10-01	-246	02
MS3341-1-9	38-30-10-01	-010A	02	MS35206-215	24-60-10-02	-033	04
MS3367-1-0	21-25-75-01	-019	02	MS35206-215	24-60-10-02	-245	02
MS3367-1-0	52-40-11-01	-023	02	MS35206-215	24-60-15-01	-096	04
MS3367-1-0	52-40-25-01	-014	01	MS35206-215	31-37-00-01	-005	04
MS3367-1-0	52-40-37-01	-019	02	MS35206-215	35-20-15-01	-010	04
MS3367-1-0	52-40-37-01	-168	02	MS35206-215	57-60-00-03	-012	02
MS3367-1-0	52-40-51-01	-016	01	MS35206-216	23-15-00-01	-009	04
MS3367-1-0	52-40-51-01	-035	01	MS35206-217	52-70-60-01	-006	04
MS3367-1-9	28-11-20-01	-037	AR	MS35206-219	71-70-00-01	-032	04
MS3367-1-9	28-11-20-01	-107	AR	MS35206-223	52-10-03-01	-032	01
MS3367-1-9	28-11-30-01	-038	AR	MS35206-225	21-23-20-01	-019	02
MS3367-1-9	28-20-00-01	-015	AR	MS35206-225	21-23-20-01	-029	02
MS3367-1-9	28-20-00-02	-002A	08	MS35206-227	21-25-20-01	-078	04
MS3367-1-9	28-20-00-02	-091	02	MS35206-227	23-70-00-01	-005	02
MS3367-1-9	28-20-21-01	-107	AR	MS35206-227	24-60-05-01	-013	04
MS3367-1-9	32-51-05-01	-034	02	MS35206-227	24-60-05-02	-013	04
MS3367-1-9	32-51-05-01	-077	01	MS35206-227	24-60-05-02	-038	03
MS3367-2-9	21-25-00-02	-039	01	MS35206-227	24-60-10-01	-007	AR
MS3367-2-9	21-25-75-01	-004	02	MS35206-227	24-60-10-02	-007	AR
MS3367-2-9	27-80-00-02	-201	AR	MS35206-227	25-50-00-01	-002	06
MS3367-2-9	27-80-00-03	-039	AR	MS35206-227	25-50-00-01	-081	02
MS3367-2-9	27-80-00-03	-103	AR	MS35206-227	27-40-00-01	-087	04
MS3367-2-9	28-11-20-01	-193	AR	MS35206-227	28-11-40-01	-020	02
MS3367-2-9	28-20-00-01	-016	AR	MS35206-228	21-25-20-01	-035	04
MS3367-2-9	28-20-00-03	-101	AR	MS35206-228	24-60-10-01	-035	04
MS3367-2-9	28-20-20-01	-025	AR	MS35206-228	24-60-10-01	-228	03
MS3367-3-9	21-23-00-01	-026	04	MS35206-228	24-60-10-02	-035	04
MS3367-3-9	21-50-20-01	-004	04	MS35206-228	24-60-10-02	-228	03
MS3367-3-9	38-30-05-01	-005	AR	MS35206-228	24-60-15-01	-098	02
MS3367-3-9	38-30-10-01	-011	03	MS35206-228	34-25-00-01	-019	04
MS3367-3-9	38-30-10-01	-011A	02	MS35206-229	23-50-20-01	-028	02
MS3367-6-9	21-23-20-01	-004	08	MS35206-229	24-30-30-01	-078	02
MS3367-6-9	38-30-15-01	-016	02	MS35206-229	28-11-40-01	-016	02
MS3367-7-0	32-20-00-02	-157	01	MS35206-229	33-40-10-01	-004	04
MS3367-7-9	21-23-20-01	-036	04	MS35206-229	34-31-00-01	-007	02
MS33737-16	35-10-20-01	-089	04	MS35206-229	35-20-15-01	-002	04
MS35059-22	33-30-10-01	-006	01	MS35206-229	35-20-15-01	-006	04
MS35059-22	33-30-20-01	-010	01	MS35206-230	24-50-05-01	-003	04
MS35059-31	31-10-10-01	-007	01	MS35206-230	24-60-05-01	-010	AR
MS35059-31	31-10-10-01	-008	01	MS35206-230	24-60-05-02	-010	AR
MS35059-31	31-10-10-01	-009	01	MS35206-230	27-21-00-01	-029	02
MS3506-1	24-40-05-01	-001	01	MS35206-230	32-30-10-01	-002	04
MS35190-237	52-10-35-01	-008	01	MS35206-230	34-60-00-01	-082	02

© Cessna Aircraft Company

PART NUMBER	CH SEC SUBJ FIG	ITEM	REQ
MS35206-231	21-50-00-01	-027	01
MS35206-231	30-10-00-02	-173	01
MS35206-231	30-10-20-01	-026	02
MS35206-231	30-13-10-01	-092	01
MS35206-231	30-20-00-01	-012	01
MS35206-231	31-32-10-01	-002	02
MS35206-232	24-60-05-01	-098	02
MS35206-232	24-60-05-02	-098	02
MS35206-232	34-55-00-01	-009	01
MS35206-233	34-10-25-01	-003	02
MS35206-234	35-10-20-01	-086	04
MS35206-235	21-25-20-01	-077	04
MS35206-236	33-40-35-01	-006	01
MS35206-238	21-29-00-01	-003	04
MS35206-240	21-23-20-01	-013	02
MS35206-241	21-23-20-01	-041	04
MS35206-241	52-10-31-01	-003	03
MS35206-241	52-10-31-01	-032	02
MS35206-241	52-10-31-01	-077	11
MS35206-241	52-10-31-01	-081	10
MS35206-242	25-80-03-01	-024	03
MS35206-242	27-10-50-01	-347	02
MS35206-242	27-40-00-01	-159	02
MS35206-243	21-25-20-01	-008	01
MS35206-243	23-13-00-01	-040	04
MS35206-243	24-60-05-01	-076	01
MS35206-243	24-60-05-02	-076	01
MS35206-243	25-50-00-01	-024	02
MS35206-243	35-10-20-01	-092	03
MS35206-243	52-10-31-01	-110	02
MS35206-243	52-20-10-01	-018	02
MS35206-244	23-13-00-01	-029	04
MS35206-244	23-13-00-01	-032	02
MS35206-244	23-13-00-01	-035	04
MS35206-244	23-13-00-01	-037	02
MS35206-244	24-60-10-01	-226	04
MS35206-244	24-60-10-02	-226	04
MS35206-244	24-60-35-01	-002	04
MS35206-244	24-60-35-01	-018	04
MS35206-244	26-20-05-01	-006	01
MS35206-244	33-50-05-01	-002	04
MS35206-244	34-47-05-01	-003	04
MS35206-245	21-50-10-01	-051	04
MS35206-245	24-60-05-01	-011	04
MS35206-245	24-60-05-02	-011	04
MS35206-245	24-60-10-01	-006	04
MS35206-245	24-60-10-01	-252	02
MS35206-245	24-60-10-02	-006	04
MS35206-245	24-60-10-02	-252	02
MS35206-245	24-60-15-01	-153	02
MS35206-245	25-50-15-01	-087	04
MS35206-245	30-13-10-01	-102	03
MS35206-245	30-13-10-01	-105	02
MS35206-245	30-20-00-01	-008	01
MS35206-245	30-43-05-01	-003	04
MS35206-245	30-43-05-01	-005	04
MS35206-245	33-30-20-01	-014	05
MS35206-245	33-40-35-02	-031	04
MS35206-245	52-40-07-01	-014	01
MS35206-245	53-43-00-01	-029	01
MS35206-245	55-20-10-01	-012	02
MS35206-246	24-60-10-01	-301	04
MS35206-246	24-60-10-02	-301	04
MS35206-246	24-60-15-01	-010	05
MS35206-246	27-10-15-01	-082	01
MS35206-246	52-10-31-01	-105	04
MS35206-247	25-50-12-01	-002	06
MS35206-247	25-50-12-01	-004	12
MS35206-247	27-10-15-01	-006	01
MS35206-247	27-10-15-01	-076	01
MS35206-247	27-10-15-01	-157	02
MS35206-247	27-13-00-01	-002	01
MS35206-247	34-20-00-01	-004	08
MS35206-247	34-47-00-01	-005	04
MS35206-248	27-21-00-01	-005	01
MS35206-248	34-47-00-01	-004	02
MS35206-249	23-13-00-01	-025	04
MS35206-250	57-10-03-06	-010	02
MS35206-251	27-21-00-01	-006	01
MS35206-251	35-10-20-01	-019	02
MS35206-251	35-10-20-01	-165	02
MS35206-256	32-20-00-01	-022	04
MS35206-261	32-30-30-01	-012	01
MS35206-264	27-50-20-01	-002	04
MS35206-327	27-37-00-01	-007	04
MS35206-328	27-40-00-01	-078	06
MS35206-329	27-50-00-01	-237	01
MS35206-329	27-50-00-01	-312	01
MS35207-244	23-50-25-01	-007	04
MS35207-244	23-50-25-01	-013	04
MS35207-245	26-10-10-01	-002	04
MS35207-246	27-36-00-01	-179	01
MS35207-260	23-50-25-01	-017	01
MS35207-262	24-35-00-01	-015	04
MS35207-262	26-20-05-01	-005	01
MS35207-263	24-30-15-01	-003	04
MS35207-263	24-35-00-01	-013	04
MS35207-263	24-60-10-01	-240	02
MS35207-263	24-60-10-01	-304	04
MS35207-263	24-60-10-02	-240	02
MS35207-263	24-60-10-02	-304	04
MS35207-263	24-60-15-01	-017	04
MS35207-263	24-60-15-01	-024	04
MS35207-263	27-50-00-02	-013	04
MS35207-263	28-40-10-01	-002	04
MS35207-263	31-30-00-01	-006	03
MS35207-263	32-47-10-01	-002	04
MS35207-263	35-20-00-01	-092	01
MS35207-263	36-10-20-03	-084	02
MS35207-264	49-40-05-01	-006	03
MS35207-264	52-70-40-01	-002	02
MS35207-268	24-35-00-01	-018	02
MS35207-269	34-47-05-01	-007	02
MS35207-284	24-60-10-01	-333	AR
MS35207-284	24-60-10-02	-332	AR
MS35207-284	24-60-15-01	-091	06
MS35214-28	34-21-10-01	-002	03
MS35218-13	34-24-01-01	-009	03
MS35309-360	24-30-00-01	-031	01
MS35309-360	24-30-30-01	-082	02
MS35309-360	24-35-00-01	-021	01
MS35333-126	21-60-00-01	-013	AR
MS35333-126	31-10-10-01	-012	AR
MS35333-126	31-10-20-01	-010	01

© Cessna Aircraft Company

PART NUMBER	CH SEC SUBJ FIG	ITEM	REQ
MS35333-126	49-40-00-01	-013	AR
MS35333-136	21-60-00-01	-006	01
MS35333-136	32-61-00-01	-004	01
MS35333-136	32-61-00-01	-078	01
MS35333-136B	24-50-05-01	-009	01
MS35333-37	25-50-15-01	-026	02
MS35333-39	53-10-10-01	-077	01
MS35333-39	55-30-10-01	-004	16
MS35333-42	21-60-00-01	-017	01
MS35333-42	28-11-45-01	-005	02
MS35333-42	57-40-00-02	-085	02
MS35333-43	38-30-00-02	-004	01
MS35333-70	33-40-25-01	-015	04
MS35333-71	33-40-25-01	-014	02
MS35333-72	25-50-15-01	-088	04
MS35333-73	36-10-20-02	-104	01
MS35333-76	49-40-00-01	-016	01
MS35333-77	52-11-00-01	-020	01
MS35335-39	32-45-00-01	-032	01
MS35338-103	24-30-00-01	-033	01
MS35338-103	24-35-00-01	-023	01
MS35338-138	53-23-00-03A	-006	01
MS35338-138	53-23-00-03A	-022	01
MS35338-140	53-60-00-01	-020	01
MS35338-140	53-60-00-06	-020	01
MS35338-155	34-10-00-01	-004	04
MS35338-155	34-10-00-01	-018	04
MS35338-155	34-55-00-01	-011	01
MS35338-40	27-50-20-01	-036A	06
MS35338-41	24-60-10-01	-008	AR
MS35338-41	24-60-10-02	-008	AR
MS35338-41	27-50-20-01	-006	20
MS35338-41	27-50-20-01	-010	02
MS35338-42	24-60-05-01	-077	01
MS35338-42	24-60-05-02	-077	01
MS35338-42	24-60-15-01	-021	07
MS35338-42	27-36-00-01	-181	01
MS35338-42	27-36-00-01	-205	01
MS35338-42	31-30-00-01	-018	01
MS35338-42	32-20-00-02	-011	01
MS35338-42	52-10-37-01	-023	01
MS35338-42	52-40-07-01	-017	01
MS35338-42	53-23-00-03	-005	01
MS35338-42	53-43-00-01	-033	01
MS35338-42	53-60-00-07	-012	01
MS35338-42	53-60-00-07	-174	01
MS35338-42	53-60-00-07	-257	01
MS35338-42	53-60-00-07	-313	01
MS35338-42	53-60-05-03	-015	01
MS35338-43	24-60-10-01	-305	04
MS35338-43	24-60-10-02	-305	04
MS35338-43	24-60-15-01	-018	04
MS35338-43	24-60-15-01	-025	04
MS35338-43	25-60-00-01	-019	01
MS35338-43	27-50-20-01	-029	02
MS35338-43	28-20-05-01	-032	01
MS35338-43	30-40-00-01A	-006	01
MS35338-43	30-40-00-01A	-015	01
MS35338-43	31-30-00-01	-015	01
MS35338-43	32-20-00-02	-154	01
MS35338-43	32-30-30-01	-013	02
MS35338-43	33-50-00-01	-007	01
MS35338-43	34-47-05-01	-012	01
MS35338-43	53-23-00-03	-014	01
MS35338-43	57-60-00-01	-082	02
MS35338-44	24-60-10-01	-037	02
MS35338-44	24-60-10-01	-335	AR
MS35338-44	24-60-10-02	-038	02
MS35338-44	24-60-10-02	-334	AR
MS35338-44	24-60-15-01	-088	02
MS35338-44	24-60-15-01	-094	06
MS35338-44	29-23-00-01	-086	01
MS35338-44	34-43-00-01	-005	04
MS35338-45	24-60-10-01	-324	AR
MS35338-45	24-60-10-02	-323	AR
MS35338-45	24-60-15-01	-082	AR
MS35338-45	29-23-00-01	-087	01
MS35338-45	52-70-00-01	-009	01
MS35338-46	24-30-30-01	-088	01
MS35338-46	24-60-10-01	-309	02
MS35338-46	24-60-10-02	-309	02
MS35338-46	24-60-15-01	-028	02
MS35489-1	32-20-00-01	-018	02
MS35489-101	57-30-00-01	-087	01
MS35489-103	27-50-00-01	-251	01
MS35489-103	27-50-00-01	-252	02
MS35489-11	32-30-00-03	-082	02
MS35489-11	53-20-00-03	-023	01
MS35489-12	26-13-00-01	-006	01
MS35489-12	28-21-00-02	-164	01
MS35489-12	28-21-00-03	-103	02
MS35489-13	36-15-00-01	-054	01
MS35489-134	30-40-00-01	-004	04
MS35489-134	30-40-00-01A	-004	04
MS35489-141	32-20-00-01	-024	02
MS35489-141	38-32-10-01	-014	01
MS35489-149	24-50-05-01	-004	01
MS35489-149	29-23-00-01	-248	01
MS35489-149	30-40-00-01	-025	01
MS35489-150	53-10-10-01	-043	01
MS35489-150	53-10-10-01	-052	01
MS35489-150X	29-10-00-04	-097	01
MS35489-150X	29-10-00-06	-162	01
MS35489-16	27-50-00-01	-019	02
MS35489-16	27-50-00-01	-020	03
MS35489-16	27-50-00-01	-092	10
MS35489-16	27-50-00-01	-165	02
MS35489-16	27-50-00-01	-249	05
MS35489-16	27-50-00-01	-250	04
MS35489-35	21-25-20-01	-094	02
MS35489-35X	29-20-05-01	-013	01
MS35489-35X	29-21-00-01	-019	01
MS35489-4	33-30-10-01	-009	01
MS35489-4	52-40-01-01	-024	01
MS35489-4	53-20-02-03	-015	02
MS35489-40	29-10-80-01	-173	02
MS35489-42	27-80-00-02	-200	AR
MS35489-42	27-80-00-03	-038	AR
MS35489-42	27-80-00-03	-102	AR
MS35489-6	29-10-00-07	-029	02
MS35489-6	32-31-05-01	-008	01
MS35489-6	52-11-00-01	-036	02
MS35489-98	27-00-02-01	-229	01
MS35649-244	33-40-25-01	-017	04

© Cessna Aircraft Company

PART NUMBER	CH SEC SUBJ FIG	ITEM	REQ
MS35649-262	34-55-00-01	-012	01
MS35649-282	24-60-15-01	-020	07
MS35650-302	32-20-00-02	-155	01
MS35650-302	52-30-20-01	-033	01
MS35650-304	36-10-20-02	-105	01
MS35650-3255T	24-60-10-01	-039	02
MS35650-3255T	24-60-10-02	-040	02
MS35650-3255T	24-60-15-01	-090	02
MS35650-382	27-36-00-01	-183	01
MS35675-4	56-15-00-01	-026	01
MS35842-13	24-35-00-01	-082	02
MS35842-13	24-35-00-01	-089	02
MS35842-13	24-35-00-01	-091	02
MS35842-13	30-13-10-01	-013	01
MS35842-14	24-35-00-01	-008	04
MS35842-14	36-13-00-01	-020	01
MS35842-16	21-26-00-01	-005	02
MS35842-16	21-26-00-01	-017	02
MS51521A12	26-23-00-01	-010	01
MS51521A4	49-10-20-01	-007	01
MS51521B4	21-33-00-01	-030	01
MS51521B4	21-33-00-01	-037	01
MS51521B4	27-40-00-01	-093	01
MS51521B4	30-10-00-01	-017	02
MS51521B4	36-15-00-01	-021	02
MS51521B4	36-15-00-02	-114	02
MS51521B4	71-70-00-01	-002	01
MS51521B4	71-70-00-01	-004	01
MS51521B4	71-70-00-01	-016	01
MS51521B4	71-70-00-01	-021	01
MS51521B6	37-10-00-01	-011	01
MS51521B6	37-10-00-01	-080	01
MS51521B6	37-10-00-01	-086	01
MS51957-14	33-40-25-01	-016	04
MS51957-26	33-40-25-01	-007	01
MS51957-26	33-40-25-01	-013	02
MS51958-25	34-10-00-01	-003	04
MS51958-25	34-10-00-01	-017	04
MS51959-17	33-30-20-01	-007	03
MS90335-5	23-50-20-01	-017	01
MS90335-5	23-50-20-01	-024	01
MS90335-5	24-60-05-01	-099	01
MS90335-5	24-60-05-02	-099	01
MS90353-0505	53-12-00-01	-009	04
MS90354-0502	53-20-02-01	-239	03
MS90354-0505	53-12-00-01	-010	06
MS90354S0502	53-20-02-01	-239A	03
MS90354U0502	53-20-02-01	-239B	03
MS9204-035	36-10-20-02	-001	02
MS9204-059	36-10-20-04	-003	02
MS9245-25	28-21-00-01	-083	01
MS9245-25	52-10-19-01	-178	01
MS9245-25	52-10-35-01	-006	01
MS9245-25	52-10-35-01	-014	01
MS9245-25	52-10-37-01	-095	04
MS9245-27	27-60-00-01	-006	01
MS9245-27	27-60-00-01	-023	02
MS9245-27	27-60-00-01	-028	01
MS9245-50	32-51-00-01	-160	10
MS9353-03	32-33-00-01	-011	01
MS9353-03	52-11-00-01	-011	01
MS9353-03	52-11-00-01	-026	03
MS9385-04	21-21-00-01	-031	02
MS9385-04	30-10-00-01	-010	04
MS9385-04	30-10-00-01	-021	02
MS9385-04	35-10-20-01	-030	01
MS9385-04	35-10-20-01	-168	01
MS9385-04	36-10-20-02	-091	04
MS9385-04	52-11-20-01	-019	01
MS9385-04	80-10-00-01	-170	01
MS9385-05	35-10-00-01	-004	01
MS9385-05	35-10-20-01	-022	02
MS9385-05	35-10-20-01	-155	04
MS9385-06	36-15-00-03	-019	01
MS9385-06	36-15-00-03	-024	02
MS9385-08	21-21-00-01	-029	02
MS9385-08	36-15-00-03	-080	09
MS9557-07	36-10-20-02	-003	04
MS9557-07	36-10-20-04	-002	04
MS9596-067	21-35-00-01	-017	01
MS9696-12	73-30-00-01	-003	03
MS9715-09	49-10-00-01	-010	04
MSPF101BC0	23-50-20-01	-034	01
MVC69370AP150	30-20-00-02	-002	01
MXP411-10	35-10-10-01	-001	01
MXP411-10	35-10-10-01	-002	01
N	11-00-00-01	-001	AR
NAS1022N4	53-20-00-01	-007A	01
NAS1022N4	53-20-00-01	-011A	04
NAS1022N4	53-20-00-01	-026A	01
NAS1022N4	53-20-00-01	-039A	01
NAS1022N4	53-20-00-01	-154A	01
NAS1022N4	53-20-00-01	-164A	01
NAS1022N4	53-20-00-01	-177A	01
NAS1033A08	24-30-55-01	-017	01
NAS1033A08	24-60-15-01	-006	08
NAS1033A3	36-15-00-02	-047	04
NAS1080AG05	27-20-05-01	-161D	04
NAS1080K04	57-20-01-05	-022	04
NAS1080K04	57-20-01-06	-009	06
NAS1080K05	27-10-50-02	-011	10
NAS1080K05	27-10-50-02	-017	06
NAS1080K05	57-10-02-02	-009	04
NAS1080K05	57-10-02-02	-014	03
NAS1080K05	57-10-02-02	-021	06
NAS1080K05	57-10-02-02	-026	06
NAS1080K05	57-10-02-02	-031	06
NAS1080K05	57-10-02-02	-034	34
NAS1080K05	57-20-01-06	-017	04
NAS1080K05	57-20-01-06	-025	02
NAS1080K05	57-20-01-06	-092	02
NAS1080K05	57-20-01-06	-103	04
NAS1080K05	57-20-01-07	-010	04
NAS1080K05	57-20-01-07	-018	02
NAS1080K05	57-20-01-07	-082	13
NAS1080K05	57-20-01-07	-090	02
NAS1080K05	57-20-01-07	-098	04
NAS1080K05	57-20-01-08	-011	04
NAS1080K05	57-20-01-08	-018	04
NAS1080K05	57-20-01-08	-090	02
NAS1080K05	57-20-01-08	-098	04
NAS1080K05	57-20-01-09	-012	02
NAS1080K05	57-20-01-09	-020	06
NAS1080K05	57-20-01-09	-084	08

© Cessna Aircraft Company

PART NUMBER	CH SEC SUBJ FIG	ITEM	REQ
NAS1080K05	57-20-01-09	-092	02
NAS1080K05	57-20-01-09	-099	02
NAS1080K05	57-20-01-11	-022	02
NAS1080K05	57-20-01-11	-030	04
NAS1080K05	57-20-01-11	-090	02
NAS1080K05	57-20-01-11	-101	02
NAS1080K05	57-20-01-12	-009	02
NAS1080K05	57-20-01-12	-082	04
NAS1081-06A4	27-50-00-02	-005	NP
NAS1081-06A4N	27-50-00-02	-005A	01
NAS1081-06A4P	27-50-00-02	-005B	01
NAS1081-4D4	52-10-19-01	-086	NP
NAS1081-4D4N	52-10-19-01	-086A	01
NAS1081-4D4P	52-10-19-01	-086B	01
NAS1081-4D6	52-10-19-01	-087	NP
NAS1081-4D6N	52-10-19-01	-087A	01
NAS1081-4D6P	52-10-19-01	-087B	01
NAS1081C08D5	29-10-80-01	-158	NP
NAS1081C08D5N	29-10-80-01	-158A	04
NAS1081C08D5P	29-10-80-01	-158B	04
NAS1081C4A6L	52-10-19-01	-017	01
NAS1102E08-6P	57-00-05-01	-003	12
NAS1102E08-6P	57-00-05-01	-009	12
NAS1102E08-6P	57-00-05-01	-015	12
NAS1102E08-6P	57-00-05-01	-021	12
NAS1102E08-6P	57-00-05-01	-077	12
NAS1102E08-6P	57-00-05-01	-084	16
NAS1102E08-6P	57-00-05-01	-092	16
NAS1102E08-6P	57-00-05-01	-100	12
NAS1103-24D	27-32-00-01	-152	01
NAS1103-24D	27-32-00-01	-174	02
NAS1104-13	32-51-00-01	-023	01
NAS1104-16D	27-32-00-01	-180	01
NAS1149B0663H	24-30-00-01	-034	01
NAS1149B0663H	24-35-00-01	-022	01
NAS1149B1016H	28-23-00-01	-026	04
NAS1149BN632H	34-21-10-01	-003	03
NAS1149C0316R	32-31-25-01	-026	02
NAS1149C0332B	52-10-03-01	-151	02
NAS1149C0332R	21-23-00-01	-153	01
NAS1149C0332R	21-23-00-01	-162	01
NAS1149C0332R	21-23-00-01	-167	01
NAS1149C0332R	21-23-00-01	-172	01
NAS1149C0332R	25-60-00-01	-005	04
NAS1149C0332R	25-60-00-01	-013	04
NAS1149C0332R	27-20-00-01	-011	02
NAS1149C0332R	27-24-05-01	-013	02
NAS1149C0332R	28-11-10-01	-022	02
NAS1149C0332R	28-11-10-01	-087	02
NAS1149C0332R	28-11-10-01	-153	01
NAS1149C0332R	28-11-10-01	-165	01
NAS1149C0332R	28-11-20-01	-015	01
NAS1149C0332R	28-11-20-01	-030	02
NAS1149C0332R	28-11-40-01	-013	02
NAS1149C0332R	28-11-40-01	-080	02
NAS1149C0332R	28-11-40-01	-085	02
NAS1149C0332R	28-11-40-01	-089	02
NAS1149C0332R	28-11-40-01	-095	02
NAS1149C0332R	28-20-00-03	-022	02
NAS1149C0332R	28-20-05-01	-004	12
NAS1149C0332R	28-20-05-01	-030	01
NAS1149C0332R	28-20-20-01	-003	04

PART NUMBER	CH SEC SUBJ FIG	ITEM	REQ
NAS1149C0332R	28-20-21-01	-004	03
NAS1149C0332R	28-20-21-01	-009	01
NAS1149C0332R	28-20-21-01	-092	01
NAS1149C0332R	28-20-21-01	-164	03
NAS1149C0332R	28-21-00-03	-028	01
NAS1149C0332R	29-10-00-05	-152	03
NAS1149C0332R	29-10-00-05	-191	01
NAS1149C0332R	29-10-30-01	-164	02
NAS1149C0332R	29-10-80-01	-099	01
NAS1149C0332R	29-20-05-01	-016	01
NAS1149C0332R	29-23-00-01	-387	02
NAS1149C0332R	30-20-00-02	-007	02
NAS1149C0332R	32-10-30-01	-094	02
NAS1149C0332R	32-31-25-01	-027	08
NAS1149C0332R	32-33-00-01	-005	04
NAS1149C0332R	32-33-00-01	-008	02
NAS1149C0332R	32-33-05-01	-003	02
NAS1149C0332R	32-33-05-01	-007	02
NAS1149C0332R	32-49-00-01	-023	03
NAS1149C0332R	32-51-00-01	-004	02
NAS1149C0332R	32-51-00-01	-042	01
NAS1149C0332R	32-51-05-01	-004	02
NAS1149C0332R	32-51-35-01	-015	04
NAS1149C0332R	32-70-00-01	-018	03
NAS1149C0332R	36-10-20-01	-034	08
NAS1149C0332R	36-10-20-02	-016	02
NAS1149C0332R	52-40-01-01	-010	02
NAS1149C0332R	55-20-00-01	-087	30
NAS1149C0332R	55-20-00-01	-091	48
NAS1149C0332R	55-20-00-01	-095	38
NAS1149C0332R	55-40-00-01	-091	02
NAS1149C0332R	57-70-00-02	-005	02
NAS1149C0332R	71-60-00-01	-036	04
NAS1149C0332R	80-10-00-01	-092	01
NAS1149C0363B	24-20-10-01	-006	04
NAS1149C0363R	21-50-05-01	-005	04
NAS1149C0363R	21-50-05-01	-010	04
NAS1149C0363R	21-50-05-01	-015	18
NAS1149C0363R	21-50-10-01	-041	16
NAS1149C0363R	26-11-00-01	-013	01
NAS1149C0363R	28-11-40-01	-004	02
NAS1149C0363R	28-11-40-01	-008	02
NAS1149C0363R	28-20-00-03	-088	04
NAS1149C0363R	28-20-00-03	-234	28
NAS1149C0363R	28-20-20-01	-018	04
NAS1149C0363R	28-20-30-01	-012	04
NAS1149C0363R	28-20-30-01	-027	04
NAS1149C0363R	28-20-30-01	-087	04
NAS1149C0363R	30-10-20-01	-006	02
NAS1149C0363R	30-10-30-01	-007	04
NAS1149C0363R	30-10-30-01	-021	04
NAS1149C0363R	30-13-10-01	-017	04
NAS1149C0363R	30-13-10-01	-025	04
NAS1149C0363R	30-13-10-01	-077	08
NAS1149C0363R	30-13-10-01	-082	04
NAS1149C0363R	30-20-00-01	-028	01
NAS1149C0363R	32-10-30-01	-095	01
NAS1149C0363R	32-43-00-01	-159	01
NAS1149C0363R	32-43-00-01	-163	01
NAS1149C0363R	36-10-20-02	-077	16
NAS1149C0363R	37-10-00-01	-104	01
NAS1149C0363R	38-30-15-01	-019	08

© Cessna Aircraft Company

PART NUMBER	CH SEC SUBJ FIG	ITEM	REQ	PART NUMBER	CH SEC SUBJ FIG	ITEM	REQ
NAS1149C0363R	52-40-45-01	-003	04	NAS1149C0532R	32-31-25-01	-015	AR
NAS1149C0363R	57-70-00-02	-004	02	NAS1149C0532R	57-51-00-01	-087	01
NAS1149C0363R	57-70-00-02	-109	02	NAS1149C0532R	57-51-00-01	-158	02
NAS1149C0363R	71-10-00-01	-083	01	NAS1149C0563R	32-31-25-01	-016	AR
NAS1149C0363R	71-10-00-01	-159	02	NAS1149C0632R	21-50-10-01	-025	06
NAS1149C0363R	71-10-00-01	-252	02	NAS1149C0632R	36-10-20-01	-032	02
NAS1149C0416R	26-10-00-01	-007	AR	NAS1149C0632R	57-51-00-01	-007	02
NAS1149C0416R	27-25-00-02	-009	02	NAS1149C0632R	57-51-00-01	-085	01
NAS1149C0416R	27-80-05-01	-003	06	NAS1149C0632R	57-51-00-01	-160	01
NAS1149C0416R	71-10-00-01	-272	AR	NAS1149C0716R	32-33-00-01	-376	01
NAS1149C0432R	26-10-00-01	-006	AR	NAS1149C0732R	27-80-00-01	-076	08
NAS1149C0432R	27-50-00-01	-153	02	NAS1149C0732R	27-80-00-02	-002	08
NAS1149C0432R	27-50-00-01	-228	02	NAS1149C0732R	27-80-00-02	-076	08
NAS1149C0432R	27-50-00-01	-303	02	NAS1149C0732R	27-80-00-02	-157	08
NAS1149C0432R	27-50-00-01	-378	02	NAS1149C0732R	27-80-00-02	-191	08
NAS1149C0432R	27-50-00-01	-453	02	NAS1149C0732R	27-80-00-03	-002	08
NAS1149C0432R	28-11-55-01	-077	02	NAS1149C0732R	27-80-00-03	-026	08
NAS1149C0432R	28-21-00-02	-239	02	NAS1149C0732R	27-80-00-03	-076	08
NAS1149C0432R	29-10-00-02	-157	02	NAS1149C0732R	27-80-00-03	-092	08
NAS1149C0432R	29-10-00-08	-010	02	NAS1149C0732R	29-10-00-04	-016	02
NAS1149C0432R	29-10-00-08	-088	02	NAS1149C0732R	29-10-00-06	-006	02
NAS1149C0432R	29-10-30-01	-004	02	NAS1149C0732R	29-10-00-08	-031	06
NAS1149C0432R	29-10-30-01	-077	03	NAS1149C0732R	29-10-00-08	-055	04
NAS1149C0432R	29-10-30-01	-084	03	NAS1149C0732R	29-10-00-09	-022	02
NAS1149C0432R	29-10-30-01	-152	03	NAS1149C0732R	29-10-00-09	-030	02
NAS1149C0432R	29-10-30-01	-158	01	NAS1149C0732R	29-10-00-10	-024	01
NAS1149C0432R	29-10-30-01	-227	02	NAS1149C0732R	29-10-00-10	-178	01
NAS1149C0432R	29-10-80-01	-026	01	NAS1149C0732R	29-10-00-11	-009	20
NAS1149C0432R	29-10-80-01	-087	02	NAS1149C0732R	29-10-00-11	-047	04
NAS1149C0432R	29-20-05-01	-003	04	NAS1149C0732R	29-10-00-11	-081	08
NAS1149C0432R	29-21-00-01	-005	04	NAS1149C0732R	29-10-00-11	-193	08
NAS1149C0432R	29-21-00-01	-026	03	NAS1149C0732R	29-10-00-12	-002	05
NAS1149C0432R	32-10-00-01	-004	01	NAS1149C0732R	29-10-00-12	-088	06
NAS1149C0432R	32-10-30-01	-012	04	NAS1149C0732R	29-10-00-12	-172	08
NAS1149C0432R	32-30-15-01	-003	03	NAS1149C0732R	29-10-00-12	-241	08
NAS1149C0432R	32-43-00-01	-077	01	NAS1149C0732R	29-10-00-12	-244	08
NAS1149C0432R	32-43-10-01	-003	04	NAS1149C0732R	29-10-00-12	-323	08
NAS1149C0432R	32-49-00-01	-079	02	NAS1149C0732R	29-10-00-12	-335	04
NAS1149C0432R	32-51-00-01	-016	01	NAS1149C0732R	29-10-09-01	-152	01
NAS1149C0432R	32-51-00-01	-020	01	NAS1149C0732R	29-10-09-01	-230	01
NAS1149C0432R	32-51-35-01	-020	01	NAS1149C0732R	29-23-00-01	-025	04
NAS1149C0432R	36-10-20-03	-095	02	NAS1149C0732R	29-23-00-01	-172	01
NAS1149C0432R	36-10-20-04	-016	03	NAS1149C0732R	29-23-05-01	-153	01
NAS1149C0432R	52-10-22-01	-029	02	NAS1149C0732R	32-33-00-01	-095	03
NAS1149C0432R	52-10-22-01	-181	02	NAS1149C0732R	32-43-00-02	-087	03
NAS1149C0432R	52-10-22-02	-155	01	NAS1149C0732R	32-43-00-02	-161	04
NAS1149C0432R	55-20-00-01	-099	02	NAS1149C0732R	32-43-00-02	-184	04
NAS1149C0432R	57-60-00-01	-007	02	NAS1149C0732R	32-43-00-02	-231	08
NAS1149C0432R	71-00-00-01	-013	04	NAS1149C0732R	32-43-00-02	-256	04
NAS1149C0432R	71-10-00-01	-273	AR	NAS1149C0732R	32-43-00-02	-260	04
NAS1149C0463B	27-20-00-01	-083	03	NAS1149C0732R	32-49-00-02	-097	01
NAS1149C0463R	26-10-00-01	-005	AR	NAS1149C0732R	32-49-00-03	-009	02
NAS1149C0463R	27-25-00-02	-010	02	NAS1149C0732R	32-49-00-03	-078	02
NAS1149C0463R	28-21-00-02	-096	08	NAS1149C0732R	32-49-00-03	-096	02
NAS1149C0463R	32-10-00-01	-005	01	NAS1149C0732R	32-49-00-03	-100	02
NAS1149C0463R	32-51-00-01	-024	01	NAS1149C0732R	32-51-00-01	-083	02
NAS1149C0463R	71-10-00-01	-274	AR	NAS1149C0732R	32-51-05-01	-081	02
NAS1149C0532R	28-11-55-01	-003	12	NAS1149C0732R	57-51-00-01	-088	01
NAS1149C0532R	28-21-00-03	-106	04	NAS1149C0732R	57-51-00-01	-159	01
NAS1149C0532R	29-23-00-01	-246	02	NAS1149C0732R	71-00-00-01	-004	AR
NAS1149C0532R	32-10-30-01	-098	02	NAS1149C0732R	78-30-10-01	-016	02
NAS1149C0532R	32-31-25-01	-013	01	NAS1149C0732R	78-30-10-01	-088	02

© Cessna Aircraft Company

PART NUMBER	CH SEC SUBJ FIG	ITEM	REQ
NAS1149C0732R	78-30-10-02	-101	02
NAS1149C0763R	32-31-25-01	-017	06
NAS1149C0763R	32-33-00-01	-158	01
NAS1149C0763R	32-49-00-02	-008	01
NAS1149C0763R	49-80-00-01	-007	02
NAS1149C0832R	57-51-00-01	-008	02
NAS1149C0832R	57-51-00-01	-086	01
NAS1149C0832R	71-00-00-01	-009	12
NAS1149C0832R	71-20-00-01	-007	01
NAS1149C0832R	71-20-00-01	-012	02
NAS1149C0863R	32-10-00-01	-025	01
NAS1149C0863R	38-30-05-01	-004	01
NAS1149C0932R	28-11-30-01	-035	02
NAS1149C0932R	29-10-00-04	-008	02
NAS1149C0932R	29-10-00-04	-077	02
NAS1149C0932R	29-10-00-06	-005	02
NAS1149C0932R	29-10-00-06	-170	02
NAS1149C0932R	29-10-00-08	-032	02
NAS1149C0932R	29-10-00-09	-004	02
NAS1149C0932R	29-10-00-09	-012	02
NAS1149C0932R	29-10-00-10	-004	11
NAS1149C0932R	29-10-00-10	-010	01
NAS1149C0932R	29-10-00-10	-020	02
NAS1149C0932R	29-10-00-10	-175	02
NAS1149C0932R	29-10-00-10	-181	01
NAS1149C0932R	29-10-00-10	-187	01
NAS1149C0932R	29-10-00-11	-044	04
NAS1149C0932R	29-10-00-12	-005	03
NAS1149C0932R	29-10-00-12	-009	04
NAS1149C0932R	29-10-00-12	-091	02
NAS1149C0932R	29-23-00-01	-226	01
NAS1149C0932R	32-30-00-02	-030	02
NAS1149C0932R	32-30-00-02	-162	02
NAS1149C0932R	32-30-00-02	-176	02
NAS1149C0932R	32-30-00-02	-181	04
NAS1149C0932R	32-30-00-03	-002	02
NAS1149C0932R	32-30-00-03	-034	02
NAS1149C0932R	32-30-00-03	-055	02
NAS1149C0932R	78-30-10-01	-081	02
NAS1149C0932R	78-30-10-02	-105	01
NAS1149C0963R	28-11-30-01	-036	04
NAS1149C1063R	57-80-00-01	-157	12
NAS1149C1232R	29-10-00-04	-090	02
NAS1149C1232R	29-10-00-06	-160	02
NAS1149C1232R	32-30-00-02	-087	02
NAS1149C1290R	36-15-00-02	-015	02
NAS1149C1432R	28-20-00-02	-104	02
NAS1149C1432R	29-10-00-04	-082	02
NAS1149C1432R	29-10-00-05	-182	01
NAS1149C1432R	29-10-00-06	-080	02
NAS1149C1432R	29-10-80-01	-007	02
NAS1149C1490R	28-11-30-01	-022	01
NAS1149C1490R	28-11-30-01	-039	02
NAS1149C1632R	29-10-80-01	-014	02
NAS1149C1632R	29-10-80-01	-080	02
NAS1149C1732R	29-10-00-04	-085	02
NAS1149C1732R	29-10-00-06	-079	02
NAS1149CN432B	52-40-07-01	-018	01
NAS1149CN432B	53-43-00-01	-032	01
NAS1149CN432R	32-31-25-01	-025	04
NAS1149CN616R	27-10-50-01	-052	01
NAS1149CN616R	57-60-00-02	-030	AR
NAS1149CN632R	21-50-00-01	-029	01
NAS1149CN632R	28-11-40-01	-017	02
NAS1149CN632R	30-10-00-02	-174	01
NAS1149CN632R	30-10-20-01	-028	04
NAS1149CN632R	30-13-10-01	-094	01
NAS1149CN632R	30-20-00-01	-013	01
NAS1149CN816B	54-50-00-01	-053	03
NAS1149CN816B	54-50-00-01	-064	03
NAS1149CN816B	54-50-00-01	-139	06
NAS1149CN816R	28-11-20-01	-174	07
NAS1149CN816R	36-10-20-02	-026	04
NAS1149CN816R	36-10-20-04	-013	04
NAS1149CN816R	36-10-20-04	-021	02
NAS1149CN816R	71-10-00-01	-244	02
NAS1149CN816R	80-10-00-01	-100	04
NAS1149CN832B	32-20-00-01	-023	04
NAS1149CN832B	52-40-07-01	-016	01
NAS1149CN832B	53-43-00-01	-031	01
NAS1149CN832R	38-30-00-01	-011	02
NAS1149CN832R	52-40-11-01	-008	AR
NAS1149D0316H	28-20-05-01	-031	02
NAS1149D0316H	32-20-00-02	-080	01
NAS1149D0316K	26-21-00-01	-005	04
NAS1149D0316K	32-49-00-01	-089	01
NAS1149D0316K	33-40-35-02	-016	07
NAS1149D0316K	52-20-10-01	-010	03
NAS1149D0316K	52-40-37-01	-006	02
NAS1149D0316K	52-40-37-01	-014	03
NAS1149D0316K	52-40-37-01	-155	02
NAS1149D0316K	52-40-37-01	-163	03
NAS1149D0332J	27-25-00-01	-085	01
NAS1149D0332J	27-25-00-01	-123	01
NAS1149D0332J	27-25-00-01	-156	01
NAS1149D0332J	27-25-00-01	-185	01
NAS1149D0332J	27-25-00-01	-257	01
NAS1149D0332J	27-25-00-01	-261	01
NAS1149D0332J	27-25-00-01	-314	01
NAS1149D0332J	27-25-00-01	-318	01
NAS1149D0332J	28-11-20-01	-180	20
NAS1149D0332J	30-40-00-01A	-007	01
NAS1149D0332J	31-30-00-01	-014	02
NAS1149D0332J	33-50-00-01	-006	02
NAS1149D0332J	34-47-05-01	-013	01
NAS1149D0332J	53-23-00-03A	-005	01
NAS1149D0332J	53-23-00-03A	-021	01
NAS1149D0332K	28-11-20-01	-168	03
NAS1149D0332K	28-21-00-01	-022	02
NAS1149D0332K	28-21-00-01	-026	08
NAS1149D0332K	28-21-00-02	-082	04
NAS1149D0332K	28-21-00-02	-153	08
NAS1149D0332K	28-21-00-02	-158	08
NAS1149D0332K	28-21-00-02	-184	02
NAS1149D0332K	28-21-00-02	-190	02
NAS1149D0332K	28-21-00-02	-228	02
NAS1149D0332K	28-21-00-02	-261	06
NAS1149D0332K	28-21-00-02	-302	03
NAS1149D0332K	28-21-00-02	-331	01
NAS1149D0332K	28-21-00-03	-182	03
NAS1149D0332K	32-51-35-01	-009	02
NAS1149D0332K	38-30-15-01	-007	AR
NAS1149D0332K	53-10-10-01	-027	02
NAS1149D0332K	53-43-00-01	-077	04

© Cessna Aircraft Company

PART NUMBER	CH SEC SUBJ FIG	ITEM	REQ
NAS1149D0332K	77-30-00-01	-003	04
NAS1149D0363K	32-51-35-01	-005	01
NAS1149D0363K	38-30-15-01	-006	04
NAS1149D0416H	34-43-00-01	-004	04
NAS1149D0416J	57-70-00-01	-109	16
NAS1149D0416K	52-10-19-01	-177	01
NAS1149D0416K	53-10-10-01	-033	01
NAS1149D0463J	53-20-00-01	-006	02
NAS1149D0463J	53-20-00-01	-025	02
NAS1149D0463J	53-20-00-01	-038	02
NAS1149D0463J	53-20-00-01	-153	02
NAS1149D0463J	53-20-00-01	-163	02
NAS1149D0463J	53-20-00-01	-176	02
NAS1149D0463J	57-70-00-01	-043	10
NAS1149D0463J	57-70-00-01	-108	12
NAS1149D0463K	28-21-00-01	-081	01
NAS1149D0463K	28-21-00-02	-079	04
NAS1149D0463K	28-21-00-02	-236	08
NAS1149D0463K	52-10-19-01	-182	AR
NAS1149D0516K	73-10-00-01	-020	02
NAS1149D0516K	73-10-00-01	-022	02
NAS1149D0516K	73-10-00-02	-021	02
NAS1149D0532J	53-60-00-01	-019	02
NAS1149D0532J	53-60-00-06	-019	02
NAS1149D0563K	28-21-00-01	-035	08
NAS1149D0616H	28-11-50-01	-002	02
NAS1149D0616K	57-70-00-01	-044	12
NAS1149D0616K	57-70-00-01	-116	04
NAS1149D0663J	57-70-00-01	-045	12
NAS1149D0663J	57-70-00-01	-110	08
NAS1149D0716J	21-33-00-01	-033	02
NAS1149D0716J	21-35-00-01	-079	02
NAS1149D0716K	32-10-00-01	-085	01
NAS1149D0732K	21-31-00-01	-003	02
NAS1149D0763J	28-21-00-02	-108	02
NAS1149D0763K	28-21-00-03	-003	02
NAS1149D0763K	28-21-00-03	-088	02
NAS1149D0763K	28-21-00-03	-165	02
NAS1149D0916J	28-20-60-01	-004	01
NAS1149D0916J	37-10-00-01	-015	01
NAS1149D0916J	37-10-00-01	-082	01
NAS1149D0916J	53-20-00-01	-014	01
NAS1149D0963J	28-11-27-01	-002	06
NAS1149D0963J	28-20-00-03	-095	01
NAS1149D0963J	28-20-65-01	-004	01
NAS1149D0963J	37-10-00-01	-083	01
NAS1149D0963K	28-21-00-02	-270	01
NAS1149D0963K	28-21-00-02	-314	02
NAS1149D0963K	28-21-00-03	-091	02
NAS1149D0963K	28-21-00-03	-168	02
NAS1149D1490H	28-21-00-03	-023	02
NAS1149D1490K	28-20-00-03	-100	02
NAS1149D1716J	27-36-00-01	-161	01
NAS1149D1790H	26-20-30-01	-009	02
NAS1149DN332J	21-50-10-01	-034	36
NAS1149DN416H	53-30-06-01	-038	02
NAS1149DN416H	53-30-06-01	-099	02
NAS1149DN616H	34-55-00-01	-010	04
NAS1149DN816H	32-20-00-02	-010	01
NAS1149DN816H	53-23-00-03	-004	01
NAS1149DN816H	53-30-06-01	-037	02
NAS1149DN816H	53-30-06-01	-098	02
NAS1149DN816H	53-30-06-02	-026	04
NAS1149DN816H	53-30-06-02	-034	04
NAS1149DN816H	53-60-05-03	-014	01
NAS1149DN816J	53-60-00-07	-013	02
NAS1149DN816J	53-60-00-07	-175	02
NAS1149DN816J	53-60-00-07	-258	02
NAS1149DN816J	53-60-00-07	-314	02
NAS1149DN832H	33-40-15-01	-012	01
NAS1149DN832J	21-23-25-01	-004	04
NAS1149DN832J	21-50-10-01	-047	04
NAS1149DN832J	25-10-05-01	-008	04
NAS1149DN832J	25-10-05-01	-015	02
NAS1149DN832J	27-36-00-01	-180	04
NAS1149DN832J	27-36-00-01	-206	01
NAS1149DN832K	21-60-00-01	-156	02
NAS1149DN832K	28-21-00-02	-162	04
NAS1149DN832K	28-21-00-02	-305	03
NAS1149DN832K	28-21-00-02	-317	02
NAS1149DN832K	28-21-00-03	-100	04
NAS1149DN832K	28-21-00-03	-186	03
NAS1149DN832K	52-40-07-01	-015	01
NAS1149DN832K	53-43-00-01	-030	01
NAS1149DN832K	53-43-00-01	-037	03
NAS1149E0332R	38-30-15-01	-026	04
NAS1149E0463R	78-30-00-01	-004	42
NAS1149F0316P	22-10-30-01	-008	04
NAS1149F0316P	22-10-30-01	-011	04
NAS1149F0316P	24-20-20-01	-009	02
NAS1149F0316P	25-50-15-01	-077	04
NAS1149F0316P	26-11-00-01	-005	01
NAS1149F0316P	26-11-00-01	-011	01
NAS1149F0316P	27-10-50-01	-108	02
NAS1149F0316P	27-10-50-01	-236	01
NAS1149F0316P	27-10-50-01	-332	01
NAS1149F0316P	27-11-00-01	-079	01
NAS1149F0316P	27-20-05-01	-077	01
NAS1149F0316P	27-24-00-01	-006	04
NAS1149F0316P	27-30-05-01	-156	02
NAS1149F0316P	27-30-05-01	-178	02
NAS1149F0316P	27-35-00-01	-009	03
NAS1149F0316P	27-35-00-01	-078	02
NAS1149F0316P	27-60-20-01	-079	02
NAS1149F0316P	35-20-00-01	-016	04
NAS1149F0316P	52-10-03-01	-081	01
NAS1149F032P	52-10-11-01	-179	01
NAS1149F0332P	21-26-00-01	-020	04
NAS1149F0332P	21-30-00-01	-003	04
NAS1149F0332P	21-35-00-01	-031	04
NAS1149F0332P	21-50-10-01	-016	02
NAS1149F0332P	22-10-10-02	-028	02
NAS1149F0332P	23-50-25-01	-018	01
NAS1149F0332P	24-35-00-01	-094	04
NAS1149F0332P	24-60-10-01	-306	04
NAS1149F0332P	24-60-10-02	-306	04
NAS1149F0332P	24-60-15-01	-019	04
NAS1149F0332P	24-60-15-01	-026	04
NAS1149F0332P	25-10-01-03	-011	02
NAS1149F0332P	25-60-00-01	-018	01
NAS1149F0332P	25-70-00-01	-003	04
NAS1149F0332P	26-10-00-01	-017	01
NAS1149F0332P	27-00-02-01	-021	02
NAS1149F0332P	27-10-15-01	-153	01

© Cessna Aircraft Company

PART NUMBER	CH SEC SUBJ FIG	ITEM	REQ	PART NUMBER	CH SEC SUBJ FIG	ITEM	REQ
NAS1149F0332P	27-10-30-01	-009	01	NAS1149F0332P	27-30-05-01	-176	01
NAS1149F0332P	27-10-30-01	-081	02	NAS1149F0332P	27-30-05-01	-241	02
NAS1149F0332P	27-10-30-01	-176	04	NAS1149F0332P	27-30-05-01	-259	02
NAS1149F0332P	27-10-30-01	-227	03	NAS1149F0332P	27-30-05-01	-279	02
NAS1149F0332P	27-10-30-01	-233	02	NAS1149F0332P	27-32-00-01	-096	03
NAS1149F0332P	27-10-50-01	-012	03	NAS1149F0332P	27-32-00-01	-153	02
NAS1149F0332P	27-10-50-01	-153	02	NAS1149F0332P	27-32-00-01	-175	04
NAS1149F0332P	27-10-50-01	-160	02	NAS1149F0332P	27-32-00-01	-228	01
NAS1149F0332P	27-10-50-01	-200	01	NAS1149F0332P	27-33-00-01	-166	04
NAS1149F0332P	27-10-50-01	-217	03	NAS1149F0332P	27-33-25-01	-012	02
NAS1149F0332P	27-10-50-01	-237	01	NAS1149F0332P	27-35-00-01	-010	02
NAS1149F0332P	27-10-50-01	-242	01	NAS1149F0332P	27-35-00-01	-026	01
NAS1149F0332P	27-10-50-01	-305	01	NAS1149F0332P	27-35-00-01	-079	01
NAS1149F0332P	27-10-50-01	-320	01	NAS1149F0332P	27-35-00-02	-018	02
NAS1149F0332P	27-10-50-01	-327	01	NAS1149F0332P	27-36-00-01	-015	01
NAS1149F0332P	27-10-50-01	-333	01	NAS1149F0332P	27-36-00-01	-026	02
NAS1149F0332P	27-10-50-02	-030	04	NAS1149F0332P	27-37-00-01	-004	02
NAS1149F0332P	27-10-50-02	-082	02	NAS1149F0332P	27-50-00-01	-003	04
NAS1149F0332P	27-10-50-02	-088	06	NAS1149F0332P	27-50-00-01	-008	02
NAS1149F0332P	27-10-50-02	-162	14	NAS1149F0332P	27-50-00-01	-015	01
NAS1149F0332P	27-10-50-02	-173	02	NAS1149F0332P	27-50-20-01	-028	02
NAS1149F0332P	27-10-50-02	-177	04	NAS1149F0332P	27-60-00-01	-010	04
NAS1149F0332P	27-11-00-01	-030	01	NAS1149F0332P	27-60-00-01	-017	04
NAS1149F0332P	27-11-00-01	-078	02	NAS1149F0332P	27-60-00-01	-021	02
NAS1149F0332P	27-11-00-01	-087	01	NAS1149F0332P	27-60-20-01	-012	01
NAS1149F0332P	27-11-00-01	-091	02	NAS1149F0332P	27-60-20-01	-019	02
NAS1149F0332P	27-11-00-01	-095	01	NAS1149F0332P	27-60-20-01	-029	02
NAS1149F0332P	27-11-00-01	-102	02	NAS1149F0332P	27-60-20-01	-081	02
NAS1149F0332P	27-11-00-01	-153	01	NAS1149F0332P	27-60-20-01	-155	04
NAS1149F0332P	27-11-00-01	-159	02	NAS1149F0332P	27-60-20-01	-159	06
NAS1149F0332P	27-11-00-01	-165	02	NAS1149F0332P	27-60-20-01	-164	02
NAS1149F0332P	27-11-00-01	-177	02	NAS1149F0332P	27-60-30-01	-011	04
NAS1149F0332P	27-11-00-01	-227	02	NAS1149F0332P	27-60-30-01	-015	06
NAS1149F0332P	27-11-20-01	-011	02	NAS1149F0332P	27-60-30-01	-087	02
NAS1149F0332P	27-11-20-01	-029	03	NAS1149F0332P	27-60-30-01	-092	02
NAS1149F0332P	27-13-00-01	-009	02	NAS1149F0332P	27-60-30-01	-098	02
NAS1149F0332P	27-13-00-01	-026	04	NAS1149F0332P	27-80-10-01	-003	08
NAS1149F0332P	27-13-00-01	-087	02	NAS1149F0332P	27-80-10-01	-016	01
NAS1149F0332P	27-13-05-01	-013	01	NAS1149F0332P	27-80-10-01	-038	01
NAS1149F0332P	27-13-05-01	-023	02	NAS1149F0332P	28-11-30-01	-017	01
NAS1149F0332P	27-13-05-01	-078	02	NAS1149F0332P	28-11-30-01	-031	01
NAS1149F0332P	27-13-05-01	-089	01	NAS1149F0332P	29-10-00-04	-256	04
NAS1149F0332P	27-13-05-01	-098	02	NAS1149F0332P	29-10-00-06	-048	02
NAS1149F0332P	27-13-05-01	-153	01	NAS1149F0332P	29-10-00-06	-187	02
NAS1149F0332P	27-13-05-01	-168	01	NAS1149F0332P	29-10-10-01	-090	04
NAS1149F0332P	27-13-05-01	-180	01	NAS1149F0332P	29-10-10-01	-238	13
NAS1149F0332P	27-13-05-01	-243	02	NAS1149F0332P	29-10-10-01	-242	01
NAS1149F0332P	27-20-00-01	-081	01	NAS1149F0332P	29-10-80-01	-154	02
NAS1149F0332P	27-20-05-01	-004	01	NAS1149F0332P	30-40-00-01	-003	08
NAS1149F0332P	27-20-05-01	-015	01	NAS1149F0332P	30-40-00-01	-015	02
NAS1149F0332P	27-20-05-02	-081	01	NAS1149F0332P	30-40-00-01A	-016	01
NAS1149F0332P	27-20-05-02	-090	01	NAS1149F0332P	30-40-00-01A	-024	02
NAS1149F0332P	27-20-05-02	-098	02	NAS1149F0332P	32-20-00-02	-004	06
NAS1149F0332P	27-24-10-01	-011	02	NAS1149F0332P	32-20-00-02	-081	01
NAS1149F0332P	27-24-15-01	-005	02	NAS1149F0332P	32-20-00-02	-087	02
NAS1149F0332P	27-24-15-01	-009	01	NAS1149F0332P	32-20-00-02	-153	01
NAS1149F0332P	27-25-00-01	-003	08	NAS1149F0332P	32-30-00-01	-089	18
NAS1149F0332P	27-25-00-01	-108	01	NAS1149F0332P	32-30-30-01	-014	01
NAS1149F0332P	27-25-00-01	-165	01	NAS1149F0332P	32-31-05-01	-015	02
NAS1149F0332P	27-25-00-01	-271	01	NAS1149F0332P	32-35-00-01	-020A	01
NAS1149F0332P	27-25-00-01	-328	01	NAS1149F0332P	32-35-00-01	-039A	01
NAS1149F0332P	27-25-00-02	-003	02	NAS1149F0332P	32-35-00-02	-028	01

© Cessna Aircraft Company

PART NUMBER	CH SEC SUBJ FIG	ITEM	REQ
NAS1149F0332P	32-43-00-01	-004	01
NAS1149F0332P	32-43-00-01	-012	02
NAS1149F0332P	33-40-35-01	-011	04
NAS1149F0332P	33-40-35-02	-007	04
NAS1149F0332P	34-57-00-01	-007	04
NAS1149F0332P	36-10-20-01	-042	08
NAS1149F0332P	36-10-20-02	-100	02
NAS1149F0332P	52-10-00-01	-011	08
NAS1149F0332P	52-10-03-01	-003	06
NAS1149F0332P	52-10-03-01	-086	02
NAS1149F0332P	52-10-03-01	-155	02
NAS1149F0332P	52-10-11-01	-098	08
NAS1149F0332P	52-10-11-01	-104	06
NAS1149F0332P	52-10-11-01	-231	01
NAS1149F0332P	52-10-13-01	-016	12
NAS1149F0332P	52-10-21-01	-034	06
NAS1149F0332P	52-10-21-01	-078	06
NAS1149F0332P	52-10-21-01	-152	01
NAS1149F0332P	52-10-21-01	-156	01
NAS1149F0332P	52-10-22-01	-010	04
NAS1149F0332P	52-10-22-01	-083	04
NAS1149F0332P	52-10-22-01	-159	04
NAS1149F0332P	52-10-22-02	-231	07
NAS1149F0332P	52-10-22-02	-237	03
NAS1149F0332P	52-10-22-02	-307	04
NAS1149F0332P	52-10-22-02	-312	04
NAS1149F0332P	52-10-35-01	-088	01
NAS1149F0332P	52-10-37-01	-008	04
NAS1149F0332P	52-10-37-01	-014	04
NAS1149F0332P	52-10-37-01	-078	08
NAS1149F0332P	52-10-37-01	-104	02
NAS1149F0332P	52-11-00-01	-007	03
NAS1149F0332P	52-11-00-01	-014	02
NAS1149F0332P	52-11-00-01	-025	06
NAS1149F0332P	52-30-00-01	-021	01
NAS1149F0332P	52-30-00-01	-027	01
NAS1149F0332P	52-30-20-01	-010	04
NAS1149F0332P	52-30-20-01	-029	02
NAS1149F0332P	52-30-20-01	-037	01
NAS1149F0332P	52-30-20-01	-084	02
NAS1149F0332P	52-30-20-01	-097	01
NAS1149F0332P	52-40-01-01	-004	02
NAS1149F0332P	52-40-37-01	-086	02
NAS1149F0332P	52-40-37-01	-234	02
NAS1149F0332P	52-70-00-01	-007	02
NAS1149F0332P	52-70-40-01	-003	02
NAS1149F0332P	53-10-12-01	-007	08
NAS1149F0332P	53-23-00-03	-015	01
NAS1149F0332P	55-10-00-01	-034	01
NAS1149F0332P	55-10-00-03	-004	03
NAS1149F0332P	55-30-10-01	-005	16
NAS1149F0332P	55-40-00-01	-029	02
NAS1149F0332P	55-40-00-01	-103	02
NAS1149F0332P	57-30-00-01	-009	05
NAS1149F0332P	57-40-10-01	-324	32
NAS1149F0332P	57-60-00-01	-005	02
NAS1149F0332P	57-60-00-01	-083	02
NAS1149F0332P	71-10-00-01	-261	01
NAS1149F0332P	71-70-00-01	-010	01
NAS1149F0332P	71-70-00-01	-025	01
NAS1149F0332P	73-10-00-01	-011	01
NAS1149F0332P	73-10-00-01	-016	02
NAS1149F0332P	73-10-00-01	-042	03
NAS1149F0332P	73-10-00-02	-010	10
NAS1149F0332P	73-10-00-02	-014	01
NAS1149F0332P	73-30-00-01	-004	03
NAS1149F0363P	21-21-00-01	-010	01
NAS1149F0363P	21-21-00-01	-038	06
NAS1149F0363P	21-23-00-01	-009	01
NAS1149F0363P	21-23-00-01	-081	02
NAS1149F0363P	21-23-00-01	-091	02
NAS1149F0363P	21-25-00-01	-007	01
NAS1149F0363P	21-25-00-01	-090	01
NAS1149F0363P	21-25-00-01	-096	01
NAS1149F0363P	21-25-00-02	-006	04
NAS1149F0363P	21-27-00-01	-003	08
NAS1149F0363P	21-28-00-01	-005	04
NAS1149F0363P	21-50-10-01	-006	14
NAS1149F0363P	21-50-10-01	-037	14
NAS1149F0363P	21-50-20-01	-007	02
NAS1149F0363P	22-10-10-01	-004	04
NAS1149F0363P	22-10-10-01	-040	03
NAS1149F0363P	22-10-10-01	-054	04
NAS1149F0363P	22-10-10-02	-042	04
NAS1149F0363P	24-30-30-01	-016	01
NAS1149F0363P	25-50-15-01	-004	02
NAS1149F0363P	27-10-15-01	-229	08
NAS1149F0363P	27-10-15-01	-233	04
NAS1149F0363P	27-10-15-01	-243	04
NAS1149F0363P	27-10-15-01	-248	04
NAS1149F0363P	27-10-30-01	-379	01
NAS1149F0363P	27-10-50-01	-176	01
NAS1149F0363P	27-10-50-01	-252	01
NAS1149F0363P	27-10-50-01	-316	02
NAS1149F0363P	27-10-50-02	-079	04
NAS1149F0363P	27-10-50-02	-178	04
NAS1149F0363P	27-11-00-01	-080	01
NAS1149F0363P	27-11-00-01	-152	01
NAS1149F0363P	27-11-20-01	-016	01
NAS1149F0363P	27-11-20-01	-030	01
NAS1149F0363P	27-12-00-01	-003	08
NAS1149F0363P	27-13-00-01	-015	01
NAS1149F0363P	27-13-00-01	-025	04
NAS1149F0363P	27-13-00-01	-082	04
NAS1149F0363P	27-13-05-01	-008	02
NAS1149F0363P	27-13-05-01	-019	02
NAS1149F0363P	27-13-05-01	-088	01
NAS1149F0363P	27-13-05-01	-152	01
NAS1149F0363P	27-13-05-01	-158	01
NAS1149F0363P	27-13-05-01	-167	02
NAS1149F0363P	27-13-05-01	-175	01
NAS1149F0363P	27-13-05-01	-244	02
NAS1149F0363P	27-20-00-01	-044	02
NAS1149F0363P	27-20-00-01	-080	02
NAS1149F0363P	27-20-05-01	-102	02
NAS1149F0363P	27-21-00-01	-025	03
NAS1149F0363P	27-24-05-01	-010	01
NAS1149F0363P	27-24-10-01	-004	02
NAS1149F0363P	27-24-10-01	-010	02
NAS1149F0363P	27-24-15-01	-008	01
NAS1149F0363P	27-30-05-01	-098	06
NAS1149F0363P	27-30-05-01	-177	01
NAS1149F0363P	27-32-00-01	-025	01
NAS1149F0363P	27-32-00-01	-091	04

© Cessna Aircraft Company

PART NUMBER	CH SEC SUBJ FIG	ITEM	REQ
NAS1149F0363P	27-32-00-01	-230	01
NAS1149F0363P	27-33-25-01	-004	03
NAS1149F0363P	27-35-00-01	-011	02
NAS1149F0363P	27-35-00-02	-019	03
NAS1149F0363P	27-35-00-02	-025	04
NAS1149F0363P	27-50-20-01	-032	08
NAS1149F0363P	27-60-00-01	-164	02
NAS1149F0363P	27-60-00-01	-175	02
NAS1149F0363P	27-60-30-01	-010	08
NAS1149F0363P	27-60-30-01	-097	04
NAS1149F0363P	28-23-00-01	-015	04
NAS1149F0363P	29-10-80-01	-153	01
NAS1149F0363P	30-10-00-01	-015	02
NAS1149F0363P	30-10-00-01	-078	02
NAS1149F0363P	30-10-00-01	-080	04
NAS1149F0363P	30-10-00-01	-093	04
NAS1149F0363P	30-10-00-02	-009	01
NAS1149F0363P	30-10-00-02	-016	01
NAS1149F0363P	30-10-00-02	-085	02
NAS1149F0363P	30-10-00-02	-100	04
NAS1149F0363P	30-10-00-02	-160	02
NAS1149F0363P	30-10-00-02	-165	02
NAS1149F0363P	30-13-00-01	-012	01
NAS1149F0363P	30-13-10-01	-005	16
NAS1149F0363P	30-13-10-01	-009	02
NAS1149F0363P	30-13-10-01	-028	02
NAS1149F0363P	32-20-00-02	-003	06
NAS1149F0363P	32-20-00-02	-014	02
NAS1149F0363P	32-20-00-02	-022	02
NAS1149F0363P	32-20-00-02	-079	02
NAS1149F0363P	32-20-00-02	-106	04
NAS1149F0363P	32-30-00-01	-016	01
NAS1149F0363P	32-30-00-01	-088	06
NAS1149F0363P	32-31-05-01	-014	02
NAS1149F0363P	32-33-00-01	-014	01
NAS1149F0363P	32-35-00-01	-012	04
NAS1149F0363P	32-35-00-01	-020	01
NAS1149F0363P	32-35-00-01	-039	02
NAS1149F0363P	32-35-00-02	-032	01
NAS1149F0363P	32-41-20-01	-011	03
NAS1149F0363P	32-49-00-01	-007	02
NAS1149F0363P	33-40-35-01	-022	04
NAS1149F0363P	33-40-35-01	-033	02
NAS1149F0363P	34-57-00-01	-009	04
NAS1149F0363P	35-10-20-01	-008	04
NAS1149F0363P	35-10-20-01	-121	01
NAS1149F0363P	36-10-20-02	-085	01
NAS1149F0363P	36-10-20-03	-010	02
NAS1149F0363P	36-10-20-03	-019	04
NAS1149F0363P	36-10-20-03	-078	04
NAS1149F0363P	36-10-20-03	-099	03
NAS1149F0363P	36-10-20-04	-031	01
NAS1149F0363P	36-10-20-04	-092	01
NAS1149F0363P	36-13-00-01	-013	01
NAS1149F0363P	36-15-00-02	-039	04
NAS1149F0363P	36-15-00-02	-171	01
NAS1149F0363P	49-10-00-01	-014	02
NAS1149F0363P	52-10-13-01	-004	01
NAS1149F0363P	52-10-19-01	-078	06
NAS1149F0363P	52-10-19-01	-152	04
NAS1149F0363P	52-10-21-01	-016	02
NAS1149F0363P	52-10-21-01	-020	01
NAS1149F0363P	52-10-21-01	-026	01
NAS1149F0363P	52-10-21-01	-030	01
NAS1149F0363P	52-10-21-01	-038	01
NAS1149F0363P	52-10-21-01	-090	01
NAS1149F0363P	52-11-20-01	-025	01
NAS1149F0363P	55-20-00-01	-021	02
NAS1149F0363P	55-30-00-02	-152	04
NAS1149F0363P	55-30-00-02	-174	04
NAS1149F0363P	55-30-00-02	-197	06
NAS1149F0363P	55-30-00-02	-231	06
NAS1149F0363P	55-30-00-02	-240	06
NAS1149F0363P	55-40-00-01	-024	04
NAS1149F0363P	56-13-00-01	-004	50
NAS1149F0363P	57-20-01-03	-020	06
NAS1149F0363P	80-10-00-01	-156	04
NAS1149F0363P	80-10-00-01	-168	02
NAS1149F0363P	80-10-00-01	-176	01
NAS1149F0363P	80-10-00-01	-183	04
NAS1149F0416P	24-20-20-01	-004	04
NAS1149F0416P	27-10-15-01	-165	02
NAS1149F0416P	27-10-30-01	-085	02
NAS1149F0416P	27-60-00-01	-026	01
NAS1149F0432P	24-60-10-01	-003	04
NAS1149F0432P	24-60-10-01	-038	02
NAS1149F0432P	24-60-10-01	-334	AR
NAS1149F0432P	24-60-10-02	-003	04
NAS1149F0432P	24-60-10-02	-039	02
NAS1149F0432P	24-60-10-02	-333	AR
NAS1149F0432P	24-60-15-01	-003	04
NAS1149F0432P	24-60-15-01	-089	02
NAS1149F0432P	24-60-15-01	-093	06
NAS1149F0432P	25-50-15-01	-040	04
NAS1149F0432P	25-80-03-01	-011	01
NAS1149F0432P	25-80-03-01	-032	03
NAS1149F0432P	25-80-03-01	-038	02
NAS1149F0432P	25-80-03-01	-050	02
NAS1149F0432P	25-80-03-01	-088	01
NAS1149F0432P	25-80-03-01	-094	03
NAS1149F0432P	25-80-03-01	-100	02
NAS1149F0432P	25-80-03-01	-123	02
NAS1149F0432P	26-20-15-01	-011	04
NAS1149F0432P	27-10-30-01	-077	02
NAS1149F0432P	27-10-30-01	-152	02
NAS1149F0432P	27-10-30-01	-310	01
NAS1149F0432P	27-10-50-01	-021	01
NAS1149F0432P	27-10-50-01	-092	03
NAS1149F0432P	27-10-50-01	-167	02
NAS1149F0432P	27-10-50-01	-207	01
NAS1149F0432P	27-11-00-01	-252	03
NAS1149F0432P	27-13-00-01	-152	02
NAS1149F0432P	27-13-00-01	-166	01
NAS1149F0432P	27-13-05-01	-237	02
NAS1149F0432P	27-14-00-01	-004	04
NAS1149F0432P	27-20-00-01	-082	01
NAS1149F0432P	27-20-00-01	-118	01
NAS1149F0432P	27-20-00-01	-160	01
NAS1149F0432P	27-20-00-01	-191	01
NAS1149F0432P	27-20-05-01	-153	01
NAS1149F0432P	27-20-05-01	-173	01
NAS1149F0432P	27-20-05-01	-227	01
NAS1149F0432P	27-21-00-01	-020	04
NAS1149F0432P	27-30-05-01	-078	01

© Cessna Aircraft Company

PART NUMBER	CH SEC SUBJ FIG	ITEM	REQ
NAS1149F0432P	27-30-05-01	-170	01
NAS1149F0432P	27-32-00-01	-016	01
NAS1149F0432P	27-32-00-01	-181	02
NAS1149F0432P	27-32-00-01	-229	02
NAS1149F0432P	27-35-00-01	-012	06
NAS1149F0432P	27-36-00-01	-006	01
NAS1149F0432P	27-50-00-01	-078	02
NAS1149F0432P	27-60-00-01	-003	01
NAS1149F0432P	27-60-00-01	-093	02
NAS1149F0432P	27-80-10-01	-009	01
NAS1149F0432P	27-80-10-01	-029	01
NAS1149F0432P	29-23-00-01	-088	01
NAS1149F0432P	32-10-30-01	-077	04
NAS1149F0432P	32-10-30-01	-086	02
NAS1149F0432P	32-30-00-01	-086	17
NAS1149F0432P	32-51-00-01	-036	02
NAS1149F0432P	32-51-00-01	-159	01
NAS1149F0432P	36-10-20-03	-090	02
NAS1149F0432P	52-10-11-01	-077	02
NAS1149F0432P	52-10-11-01	-174	01
NAS1149F0432P	52-10-11-01	-227	01
NAS1149F0432P	52-10-11-01	-238	02
NAS1149F0432P	52-10-11-01	-254	01
NAS1149F0432P	52-10-22-01	-004	04
NAS1149F0432P	52-10-22-01	-078	03
NAS1149F0432P	52-10-22-01	-102	02
NAS1149F0432P	52-10-22-01	-153	03
NAS1149F0432P	52-10-22-01	-253	02
NAS1149F0432P	52-10-22-02	-152	01
NAS1149F0432P	52-10-22-02	-163	01
NAS1149F0432P	52-10-22-02	-245	01
NAS1149F0432P	52-10-22-02	-414	08
NAS1149F0432P	52-10-35-01	-022	04
NAS1149F0432P	52-10-35-01	-026	02
NAS1149F0432P	52-10-35-01	-032	04
NAS1149F0432P	52-10-37-01	-107	02
NAS1149F0432P	52-20-00-01	-004	01
NAS1149F0432P	52-30-40-01	-003	01
NAS1149F0432P	53-15-00-02	-014	03
NAS1149F0432P	53-20-00-01	-010	04
NAS1149F0432P	55-20-00-01	-020	05
NAS1149F0432P	55-40-00-01	-006	01
NAS1149F0432P	57-60-00-01	-006	02
NAS1149F0432P	57-70-00-01	-042	04
NAS1149F0432P	57-70-00-01	-111	04
NAS1149F0432P	71-10-00-01	-004	34
NAS1149F0432P	71-10-00-01	-267	02
NAS1149F0463P	21-50-00-01	-004	04
NAS1149F0463P	22-10-10-02	-004	04
NAS1149F0463P	22-10-10-02	-016	02
NAS1149F0463P	22-10-10-02	-022	01
NAS1149F0463P	27-10-30-01	-453	01
NAS1149F0463P	27-10-50-01	-227	02
NAS1149F0463P	27-11-00-01	-254	01
NAS1149F0463P	27-11-00-01	-258	01
NAS1149F0463P	27-13-05-01	-028	01
NAS1149F0463P	27-13-05-01	-228	01
NAS1149F0463P	27-20-00-01	-016	01
NAS1149F0463P	27-20-00-01	-027	01
NAS1149F0463P	27-20-00-01	-042	05
NAS1149F0463P	27-20-00-01	-084	01
NAS1149F0463P	27-20-00-01	-111	01
NAS1149F0463P	27-20-00-01	-119	01
NAS1149F0463P	27-20-00-01	-171	02
NAS1149F0463P	27-20-05-01	-096	02
NAS1149F0463P	27-20-05-01	-172	01
NAS1149F0463P	27-20-05-02	-086	01
NAS1149F0463P	27-21-00-01	-015	01
NAS1149F0463P	27-26-00-01	-003	01
NAS1149F0463P	27-30-05-01	-171	01
NAS1149F0463P	27-32-00-01	-168	02
NAS1149F0463P	27-33-00-01	-008	04
NAS1149F0463P	27-33-00-01	-153	01
NAS1149F0463P	27-36-00-01	-086	08
NAS1149F0463P	27-60-00-01	-004	01
NAS1149F0463P	27-60-00-01	-088	03
NAS1149F0463P	27-80-10-01	-010	01
NAS1149F0463P	27-80-10-01	-028	01
NAS1149F0463P	32-10-00-01	-090	04
NAS1149F0463P	32-10-30-01	-005	08
NAS1149F0463P	32-30-00-01	-007	04
NAS1149F0463P	32-30-00-01	-015	01
NAS1149F0463P	32-30-00-01	-087	06
NAS1149F0463P	32-31-05-01	-030	01
NAS1149F0463P	32-31-05-01	-036	02
NAS1149F0463P	32-35-00-01	-078	02
NAS1149F0463P	32-51-00-01	-037	01
NAS1149F0463P	32-70-00-01	-004	56
NAS1149F0463P	32-70-00-01	-012	28
NAS1149F0463P	36-10-20-03	-091	02
NAS1149F0463P	52-10-37-01	-094	05
NAS1149F0463P	53-15-00-02	-015	01
NAS1149F0516P	24-60-10-01	-325	AR
NAS1149F0516P	24-60-10-02	-324	AR
NAS1149F0516P	24-60-15-01	-083	AR
NAS1149F0532P	24-35-00-01	-003	06
NAS1149F0532P	25-10-01-01	-005	02
NAS1149F0532P	27-10-50-01	-082	02
NAS1149F0532P	27-10-50-01	-086	04
NAS1149F0532P	27-10-50-01	-102	02
NAS1149F0532P	27-10-50-01	-193	03
NAS1149F0532P	27-13-00-01	-233	02
NAS1149F0532P	27-20-00-01	-109	01
NAS1149F0532P	27-20-00-01	-183	AR
NAS1149F0532P	27-20-15-01	-007	01
NAS1149F0532P	27-20-15-01	-008	01
NAS1149F0532P	27-24-05-01	-004	02
NAS1149F0532P	27-30-05-01	-152	01
NAS1149F0532P	27-31-00-01	-004	02
NAS1149F0532P	27-32-00-01	-004	02
NAS1149F0532P	27-32-00-01	-015	01
NAS1149F0532P	27-32-00-01	-154	01
NAS1149F0532P	29-10-10-01	-004	04
NAS1149F0532P	29-10-10-01	-153	04
NAS1149F0532P	29-23-00-01	-089	01
NAS1149F0532P	32-31-05-01	-021	01
NAS1149F0532P	49-10-00-01	-018	08
NAS1149F0532P	52-10-03-01	-099	04
NAS1149F0532P	52-10-22-02	-005	02
NAS1149F0532P	52-10-22-02	-015	02
NAS1149F0532P	52-10-22-02	-031	02
NAS1149F0532P	52-10-22-02	-078	02
NAS1149F0532P	52-10-22-02	-253	02
NAS1149F0532P	52-10-22-02	-318	02

© Cessna Aircraft Company

PART NUMBER	CH SEC SUBJ FIG	ITEM	REQ
NAS1149F0532P	52-10-22-02	-325	01
NAS1149F0532P	52-10-22-02	-380	02
NAS1149F0532P	52-10-22-02	-387	02
NAS1149F0532P	52-10-35-01	-085	01
NAS1149F0532P	55-20-00-01	-018	01
NAS1149F0532P	55-40-00-01	-007	02
NAS1149F0532P	73-10-00-01	-030	04
NAS1149F0532P	73-10-00-02	-033	04
NAS1149F0563P	27-10-50-02	-092	01
NAS1149F0563P	27-20-00-01	-176	02
NAS1149F0563P	27-20-00-01	-184	AR
NAS1149F0563P	27-20-05-02	-077	02
NAS1149F0563P	27-20-15-01	-005	02
NAS1149F0563P	27-20-15-01	-006	01
NAS1149F0563P	27-30-05-01	-094	02
NAS1149F0563P	27-30-05-01	-153	01
NAS1149F0563P	27-30-05-01	-233	01
NAS1149F0563P	27-30-05-01	-255	01
NAS1149F0563P	27-30-05-01	-275	01
NAS1149F0563P	27-31-00-01	-005	01
NAS1149F0563P	27-32-00-01	-155	01
NAS1149F0563P	27-33-00-01	-019	02
NAS1149F0563P	27-33-00-01	-077	01
NAS1149F0563P	27-33-00-01	-082	01
NAS1149F0563P	27-33-00-01	-087	01
NAS1149F0563P	27-33-00-01	-092	01
NAS1149F0563P	27-33-00-01	-097	02
NAS1149F0563P	27-33-00-01	-103	02
NAS1149F0563P	27-33-00-01	-173	02
NAS1149F0563P	29-10-05-01	-004	02
NAS1149F0563P	32-31-05-01	-022	01
NAS1149F0563P	53-15-00-02	-016	05
NAS1149F0563P	55-10-00-01	-108	03
NAS1149F0616P	24-60-10-01	-310	02
NAS1149F0616P	24-60-10-02	-310	02
NAS1149F0616P	24-60-15-01	-029	02
NAS1149F0616P	52-10-37-01	-091	02
NAS1149F0632P	27-10-30-01	-391	01
NAS1149F0632P	27-10-30-01	-536	02
NAS1149F0632P	27-11-00-01	-105	02
NAS1149F0632P	27-11-00-01	-240	01
NAS1149F0632P	27-11-00-01	-247	02
NAS1149F0632P	27-25-00-01	-094	01
NAS1149F0632P	28-11-45-01	-004	04
NAS1149F0632P	29-10-80-01	-175	02
NAS1149F0632P	32-31-05-01	-031	04
NAS1149F0632P	32-51-00-01	-154	01
NAS1149F0632P	36-10-20-03	-085	02
NAS1149F0632P	52-10-03-01	-093	01
NAS1149F0632P	52-10-19-01	-172	01
NAS1149F0632P	52-10-22-02	-334	01
NAS1149F0632P	52-10-22-02	-418	02
NAS1149F0632P	55-10-00-01	-020	04
NAS1149F0632P	55-40-00-01	-079	02
NAS1149F0632P	57-40-00-02	-084	04
NAS1149F0663P	24-30-00-01	-032	01
NAS1149F0663P	24-30-30-01	-087	02
NAS1149F0663P	27-13-35-01	-005	02
NAS1149F0663P	27-20-00-01	-021	01
NAS1149F0663P	27-60-40-01	-006	02
NAS1149F0663P	32-51-00-01	-153	04
NAS1149F0663P	55-40-00-01	-078	04
NAS1149F0663P	55-40-00-01	-095	40
NAS1149F0663P	55-40-00-01	-100	12
NAS1149F0732P	27-36-00-01	-007	01
NAS1149F0732P	27-36-00-01	-079	02
NAS1149F0732P	56-15-00-01	-078	01
NAS1149F0732P	57-40-10-01	-328	02
NAS1149F0763P	27-20-00-01	-093	01
NAS1149F0763P	27-36-00-01	-034	01
NAS1149F0763P	27-36-00-01	-080	02
NAS1149F0763P	27-40-00-01	-090	01
NAS1149F0763P	36-15-00-02	-113	02
NAS1149F0763P	36-15-00-02	-118	01
NAS1149F0763P	57-40-10-01	-327	24
NAS1149F0763P	57-40-10-01	-329	02
NAS1149F0832P	27-11-00-01	-233	01
NAS1149F0832P	35-10-00-01	-003	02
NAS1149F0832P	36-15-00-01	-033	01
NAS1149F0832P	36-15-00-02	-096	01
NAS1149F0832P	49-10-00-01	-004	03
NAS1149F0832P	52-10-03-01	-157	02
NAS1149F0832P	52-10-11-01	-020	03
NAS1149F0832P	52-10-11-01	-167	01
NAS1149F0832P	52-10-19-01	-173	01
NAS1149F0832P	52-10-22-02	-319	AR
NAS1149F0832P	55-40-00-01	-008	01
NAS1149F0863P	27-10-30-01	-454	01
NAS1149F0863P	32-10-00-01	-098	01
NAS1149F0863P	52-10-00-01	-076	04
NAS1149F0863P	57-80-00-01	-081	04
NAS1149F0932P	36-15-00-02	-163	03
NAS1149F0932P	52-10-22-02	-335	AR
NAS1149F0932P	55-10-00-01	-026	08
NAS1149F0963P	32-20-00-01	-003	04
NAS1149F0963P	34-10-00-02	-077	04
NAS1149F0963P	57-20-05-02	-011	04
NAS1149F0963P	57-20-05-02	-091	02
NAS1149F0963P	57-20-05-02	-160	02
NAS1149F0963P	57-80-00-01	-076	08
NAS1149F1016P	27-11-00-01	-232	02
NAS1149F1032P	27-40-00-01	-005	02
NAS1149F1032P	31-35-00-01	-005	02
NAS1149F1032P	32-45-00-01	-031	02
NAS1149F1063P	27-10-50-01	-309	01
NAS1149F1063P	27-40-00-01	-008	06
NAS1149F1063P	32-30-20-01	-008	02
NAS1149F1063P	52-10-13-01	-026	01
NAS1149F1063P	57-20-05-01	-011	08
NAS1149F1063P	57-20-05-01	-086	06
NAS1149F1063P	57-80-00-01	-003	04
NAS1149F1232P	29-10-00-01	-089	01
NAS1149F1232P	29-10-00-02	-091	01
NAS1149F1232P	32-30-20-01	-003	02
NAS1149F1232P	55-10-00-01	-016	04
NAS1149F1290P	32-35-00-02	-036	02
NAS1149F1290P	36-15-00-02	-014	04
NAS1149F1432P	32-10-00-01	-115	02
NAS1149F1432P	32-30-30-01	-005	01
NAS1149F1490P	32-10-00-01	-114	02
NAS1149F1490P	32-30-30-01	-006	01
NAS1149F1490P	38-30-10-01	-005	02
NAS1149F1690P	55-10-00-01	-002	02
NAS1149F2132P	28-23-00-01	-039	02

© Cessna Aircraft Company

PART NUMBER	CH SEC SUBJ FIG	ITEM	REQ	PART NUMBER	CH SEC SUBJ FIG	ITEM	REQ
NAS1149F3016P	32-10-00-01	-076	02	NAS1149FN816P	24-60-35-01	-004	06
NAS1149FN332P	49-30-00-01	-007	02	NAS1149FN816P	24-60-35-01	-020	06
NAS1149FN332P	52-30-20-01	-102	01	NAS1149FN816P	27-10-15-01	-114	04
NAS1149FN416P	21-25-20-01	-018	02	NAS1149FN816P	27-10-15-01	-158	02
NAS1149FN416P	27-50-00-01	-097	02	NAS1149FN816P	27-10-30-01	-008	01
NAS1149FN416P	27-50-20-01	-020A	09	NAS1149FN816P	27-10-50-01	-231	02
NAS1149FN416P	27-50-20-01	-036B	06	NAS1149FN816P	27-20-05-01	-085	02
NAS1149FN416P	32-31-05-01	-013	02	NAS1149FN816P	27-21-00-01	-007	02
NAS1149FN416P	33-40-30-01	-004	02	NAS1149FN816P	27-21-00-01	-034	02
NAS1149FN416P	52-10-11-01	-090	01	NAS1149FN816P	27-30-05-01	-006	01
NAS1149FN416P	52-10-11-01	-244	02	NAS1149FN816P	27-32-00-01	-164	02
NAS1149FN416P	52-10-21-01	-160	01	NAS1149FN816P	27-35-00-01	-086	01
NAS1149FN416P	52-40-25-01	-016	04	NAS1149FN816P	27-36-00-01	-019	02
NAS1149FN416P	52-40-51-01	-018	04	NAS1149FN816P	30-20-00-02	-030	04
NAS1149FN416P	52-40-51-01	-042	04	NAS1149FN816P	32-20-00-02	-009	01
NAS1149FN432P	27-50-00-01	-238	01	NAS1149FN816P	32-43-00-01	-022	05
NAS1149FN432P	27-50-00-01	-313	01	NAS1149FN816P	35-20-00-01	-013	04
NAS1149FN432P	32-31-05-01	-012	02	NAS1149FN816P	38-32-10-01	-026	10
NAS1149FN432P	52-10-03-01	-033	01	NAS1149FN816P	49-10-15-01	-005	16
NAS1149FN432P	52-10-03-01	-163	02	NAS1149FN816P	52-10-37-01	-024	01
NAS1149FN432P	52-10-11-01	-025	03	NAS1149FN816P	53-20-02-01	-095	08
NAS1149FN432P	52-10-11-01	-166	01	NAS1149FN816P	53-20-02-01	-105	11
NAS1149FN432P	52-10-11-01	-261	01	NAS1149FN816P	53-20-02-01	-108	16
NAS1149FN616P	21-29-00-01	-005	04	NAS1149FN816P	53-60-05-03	-013	01
NAS1149FN616P	24-60-10-01	-009	AR	NAS1149FN816P	55-20-00-01	-004	04
NAS1149FN616P	24-60-10-02	-009	AR	NAS1149FN816P	55-20-00-01	-007	04
NAS1149FN616P	27-50-00-01	-089	01	NAS1149FN816P	55-30-00-04	-159	02
NAS1149FN616P	27-50-00-01	-163	01	NAS1149FN816P	57-60-00-03	-005	02
NAS1149FN616P	27-50-00-01	-243	01	NAS1149FN832P	22-10-10-01	-032	03
NAS1149FN616P	27-50-00-01	-318	01	NAS1149FN832P	22-10-10-01	-036	02
NAS1149FN616P	27-50-00-01	-390	01	NAS1149FN832P	22-10-10-02	-035	03
NAS1149FN616P	27-50-00-01	-463	01	NAS1149FN832P	23-50-25-01	-008	04
NAS1149FN616P	34-10-25-01	-004	02	NAS1149FN832P	23-50-25-01	-014	04
NAS1149FN616P	52-40-37-01	-079	08	NAS1149FN832P	24-60-10-01	-302	04
NAS1149FN616P	52-40-37-01	-229	08	NAS1149FN832P	24-60-10-02	-302	04
NAS1149FN632P	21-25-20-01	-036	04	NAS1149FN832P	24-60-15-01	-011	05
NAS1149FN632P	21-25-20-01	-079	04	NAS1149FN832P	25-50-00-01	-021	04
NAS1149FN632P	21-28-00-01	-017	04	NAS1149FN832P	27-00-02-01	-003	06
NAS1149FN632P	21-60-00-01	-152	02	NAS1149FN832P	27-00-02-01	-009	04
NAS1149FN632P	27-11-20-01	-007	01	NAS1149FN832P	27-00-02-01	-017	04
NAS1149FN632P	27-11-20-01	-025	01	NAS1149FN832P	27-00-02-01	-026	04
NAS1149FN632P	27-21-00-01	-030	02	NAS1149FN832P	27-00-02-01	-035	04
NAS1149FN632P	27-35-00-02	-011	01	NAS1149FN832P	27-00-02-01	-042	08
NAS1149FN632P	27-40-00-01	-079	06	NAS1149FN832P	27-00-02-01	-046	10
NAS1149FN632P	27-50-20-01	-011	02	NAS1149FN832P	27-00-02-01	-077	10
NAS1149FN632P	27-50-20-01	-043	03	NAS1149FN832P	27-00-02-01	-087	06
NAS1149FN632P	34-60-00-01	-079	07	NAS1149FN832P	27-00-02-01	-094	04
NAS1149FN632P	34-60-00-01	-083	02	NAS1149FN832P	27-00-02-01	-098	06
NAS1149FN632P	35-10-20-01	-083	04	NAS1149FN832P	27-00-02-01	-103	10
NAS1149FN632P	52-40-19-01	-006	04	NAS1149FN832P	27-00-02-01	-107	06
NAS1149FN632P	52-40-45-01	-008	04	NAS1149FN832P	27-00-02-01	-112	04
NAS1149FN632P	56-13-00-01	-011	44	NAS1149FN832P	27-00-02-01	-118	14
NAS1149FN816P	21-29-00-01	-012	06	NAS1149FN832P	27-00-02-01	-153	04
NAS1149FN816P	21-35-00-01	-091	04	NAS1149FN832P	27-00-02-01	-160	08
NAS1149FN816P	22-10-10-01	-047	03	NAS1149FN832P	27-00-02-01	-166	08
NAS1149FN816P	24-60-05-01	-078	01	NAS1149FN832P	27-00-02-01	-170	08
NAS1149FN816P	24-60-05-02	-078	01	NAS1149FN832P	27-00-02-01	-175	08
NAS1149FN816P	24-60-10-01	-184	04	NAS1149FN832P	27-00-02-01	-181	08
NAS1149FN816P	24-60-10-02	-184	04	NAS1149FN832P	27-00-02-01	-185	06
NAS1149FN816P	24-60-15-01	-022	07	NAS1149FN832P	27-00-02-01	-227	06
NAS1149FN816P	24-60-15-01	-183	02	NAS1149FN832P	27-00-02-01	-232	04
NAS1149FN816P	24-60-15-01	-256	02	NAS1149FN832P	27-00-02-01	-236	10

© Cessna Aircraft Company

PART NUMBER	CH SEC SUBJ FIG	ITEM	REQ
NAS1149FN832P	27-00-02-01	-240	04
NAS1149FN832P	27-00-02-01	-246	04
NAS1149FN832P	27-00-02-01	-250	02
NAS1149FN832P	27-00-02-01	-254	06
NAS1149FN832P	27-00-02-01	-258	04
NAS1149FN832P	27-00-02-01	-264	04
NAS1149FN832P	27-00-02-01	-269	04
NAS1149FN832P	27-10-15-01	-178	03
NAS1149FN832P	27-10-30-01	-319	04
NAS1149FN832P	27-10-30-01	-404	04
NAS1149FN832P	27-10-30-01	-410	03
NAS1149FN832P	27-10-30-01	-468	04
NAS1149FN832P	27-11-00-01	-015	01
NAS1149FN832P	27-11-00-01	-108	02
NAS1149FN832P	27-20-00-01	-128	02
NAS1149FN832P	27-20-05-01	-253	03
NAS1149FN832P	27-20-05-01	-257	03
NAS1149FN832P	27-20-05-01	-265	04
NAS1149FN832P	27-20-05-01	-271	03
NAS1149FN832P	27-20-05-02	-004	02
NAS1149FN832P	27-20-05-02	-012	04
NAS1149FN832P	27-20-05-02	-016	04
NAS1149FN832P	27-20-05-02	-020	04
NAS1149FN832P	27-20-05-02	-024	04
NAS1149FN832P	27-30-05-01	-011	04
NAS1149FN832P	27-30-05-01	-017	04
NAS1149FN832P	27-30-05-01	-090	04
NAS1149FN832P	27-30-05-01	-166	02
NAS1149FN832P	27-30-05-01	-228	02
NAS1149FN832P	27-32-00-01	-080	03
NAS1149FN832P	27-32-00-01	-242	03
NAS1149FN832P	27-33-00-01	-160	03
NAS1149FN832P	27-35-00-02	-010	01
NAS1149FN832P	27-40-00-01	-030	02
NAS1149FN832P	27-60-20-01	-091	03
NAS1149FN832P	31-30-00-01	-017	01
NAS1149FN832P	32-35-00-01	-029	04
NAS1149FN832P	33-30-20-01	-015	02
NAS1149FN832P	33-40-15-01	-011	01
NAS1149FN832P	35-10-20-01	-087	04
NAS1149FN832P	35-10-20-01	-093	03
NAS1149FN832P	35-10-20-01	-106	09
NAS1149FN832P	35-10-20-01	-161	01
NAS1149FN832P	35-10-20-01	-171	01
NAS1149FN832P	52-20-10-01	-019	02
NAS1149FN832P	52-30-20-01	-017	02
NAS1149FN832P	52-40-15-01	-013	02
NAS1149FN832P	52-40-37-01	-023	02
NAS1149FN832P	52-40-37-01	-027	01
NAS1149FN832P	52-40-37-01	-036	04
NAS1149FN832P	52-40-37-01	-172	02
NAS1149FN832P	52-40-37-01	-176	01
NAS1149FN832P	52-40-37-01	-185	04
NAS1149FN832P	53-30-03-02	-026	04
NAS1149FN832P	55-30-00-04	-118	02
NAS1149FN832P	56-15-00-01	-095	08
NAS1149FN832P	56-20-00-01	-003	24
NAS1149FN832P	57-40-00-02	-014	04
NAS1149FN949P	34-60-00-01	-093	05
NAS1149FN949P	34-60-00-01	-097	02
NAS1169C8	53-30-02-03	-094	12
NAS1169C8	71-10-00-01	-242	46

PART NUMBER	CH SEC SUBJ FIG	ITEM	REQ
NAS1189-04P5	27-50-00-01	-095	07
NAS1189-04P6	27-50-00-01	-096	02
NAS1189-08P7WL	52-20-10-01	-006	01
NAS1189-3T6	27-36-00-01	-168	02
NAS1189-3T6	27-36-00-01	-172	02
NAS1189E08T6J	52-10-11-01	-012	04
NAS1191E06P7	27-11-20-01	-003	03
NAS1191E06P7	27-11-20-01	-021	03
NAS1191E06P7	27-25-00-02	-030	03
NAS1191E06P7	27-35-00-02	-005	03
NAS1193K5C	27-10-50-01	-025	01
NAS1193K5C	27-10-50-01	-030	01
NAS1193K5C	27-10-50-01	-184	01
NAS1195DD4XH	57-30-00-01	-019	02
NAS1195DD4XM	57-30-00-01	-020	01
NAS1221R3E10L	52-10-11-01	-002	06
NAS1227-58W	32-10-00-01	-084	01
NAS1291-08	53-20-02-01	-087A	02
NAS1291-08	53-20-02-01	-093A	02
NAS1291-08	53-20-02-01	-096A	08
NAS1291-08	53-20-02-01	-106A	11
NAS1291-08	53-20-02-01	-109A	16
NAS1291-4	53-15-00-02	-017A	03
NAS1291-5	53-15-00-02	-018A	05
NAS1291C3M	27-40-00-01	-025	06
NAS1291C3M	57-40-10-01	-325	32
NAS1291C4	53-20-03-01	-010	02
NAS1291X08	32-35-00-01	-031A	04
NAS1291X3	27-25-00-02	-004A	02
NAS1291X3	32-35-00-01	-013A	04
NAS1291X4	53-10-10-01	-034A	01
NAS1297-06-2	27-50-00-01	-088	01
NAS1297-06-2	27-50-00-01	-162	01
NAS1297-06-2	27-50-00-01	-242	01
NAS1297-06-2	27-50-00-01	-317	01
NAS1297-06-2	27-50-00-01	-389	01
NAS1297-06-2	27-50-00-01	-462	01
NAS1297-06-2	27-50-00-01	-468	01
NAS1297-3H6	36-10-20-03	-094	02
NAS1351-08-8	57-60-00-03	-004	02
NAS1351C3H8	57-40-10-01	-314	32
NAS1352-04-6	24-60-05-01	-003	14
NAS1352-04-6	24-60-05-02	-003	14
NAS1352-04-6	33-10-05-01	-002	14
NAS1352-04-6	33-10-05-01	-005	14
NAS1352-04-6	33-10-15-01	-002	07
NAS1352-04-6	33-10-15-01	-002A	08
NAS1352-04-8	21-30-00-01	-009	05
NAS1352-04-8	21-60-00-01	-002	04
NAS1352-04-8	21-60-00-01	-010	03
NAS1352-04-8	23-50-20-01	-004	04
NAS1352-04-8	27-26-00-01	-010	05
NAS1352-04-8	31-10-10-01	-003	10
NAS1352-04-8	31-10-15-01	-004	09
NAS1352-04-8	31-10-20-01	-003	06
NAS1352-04-8	31-10-25-01	-003	06
NAS1352-04-8	33-10-10-01	-002	10
NAS1352-04-8	33-10-10-01	-004	09
NAS1352-04-8	33-10-15-01	-004	02
NAS1352-04-8P	21-33-00-01	-007	01
NAS1352-06-10	27-14-00-01	-011	02
NAS1352-06-10	27-14-00-01	-015	02

© Cessna Aircraft Company

PART NUMBER	CH SEC SUBJ FIG	ITEM	REQ
NAS1352-06H10P	27-11-20-01	-006	01
NAS1352-06H10P	27-11-20-01	-024	01
NAS1352-08-10P	27-35-00-02	-009A	01
NAS1352-08-16P	27-35-00-02	-009	01
NAS1352-08-16P	57-60-00-03	-007	01
NAS1352-08-4	35-20-00-01	-012	04
NAS1352-08H8P	28-20-30-01	-003	04
NAS1352-08H8P	28-20-30-01	-019	04
NAS1352-08H8P	28-20-30-01	-077	04
NAS1352C06-8	27-40-00-01	-104	04
NAS1352C08-8	28-11-10-01	-177	07
NAS1395-3L	27-11-00-01	-264	01
NAS1395-4L	27-10-15-01	-089	01
NAS1395-4L	27-10-15-01	-129	02
NAS1395-4L	27-36-00-01	-236	02
NAS1395C4L	27-10-30-01	-531	01
NAS1401-3C3	57-20-00-08	-030	01
NAS1401-3C3	57-20-00-08	-116	02
NAS1401-3C3	57-20-00-08	-236	04
NAS1401-4C3	57-20-00-08	-117	01
NAS1423-08	27-11-00-01	-016	01
NAS1423-3	27-11-00-01	-263	01
NAS1423-4	32-51-35-01	-017	01
NAS1423-5	27-10-50-01	-031	01
NAS1423-5	27-10-50-01	-185	01
NAS1423-5	27-32-00-01	-239	01
NAS1423-5	36-10-20-02	-108	01
NAS1423-5	52-10-22-02	-174	01
NAS1423-5	52-10-37-01	-017	01
NAS1423-5	71-10-00-01	-177	08
NAS1423-6	27-11-00-01	-248	04
NAS1423-8	27-10-50-01	-182	01
NAS1473A08	38-32-10-01	-027	10
NAS1473A3	23-11-10-01	-011	06
NAS1473A3	25-60-00-01	-015	02
NAS1473A3	25-60-00-01	-023	06
NAS1473A3	34-31-00-01	-003	04
NAS1473A3	34-51-10-01	-004	04
NAS1473A3	53-40-00-01	-004	NP
NAS1473A3	53-42-01-01	-005	17
NAS1473A3	53-42-01-01	-099	15
NAS1473A3	53-42-01-01	-102	17
NAS1473A3	55-30-00-03	-025	NP
NAS1473A3	56-11-05-01	-004	03
NAS1473A3	56-11-05-01	-007	21
NAS1473A3	56-11-05-01	-010	17
NAS1473A3	56-11-05-01	-015	25
NAS1473A3	57-00-05-01	-085	04
NAS1473A3	57-00-05-01	-093	04
NAS1473A3	57-00-05-01	-156	28
NAS1473A3	57-10-01-01	-021	NP
NAS1473A3	57-40-00-02	-020	NP
NAS1473A3K	32-35-00-02	-021	02
NAS1473A3K	53-40-00-01	-005	01
NAS1473A3K	53-42-01-01	-005A	17
NAS1473A3K	55-30-00-03	-026	02
NAS1473A3K	57-10-01-01	-022	04
NAS1473A3K	57-40-00-02	-021	AR
NAS1473A3N	53-40-00-01	-006	01
NAS1473A3N	53-42-01-01	-005B	17
NAS1473A3N	53-50-00-03	-012	06
NAS1473A3N	55-30-00-03	-027	02
NAS1473A3N	57-10-01-01	-023	04
NAS1473A3N	57-40-00-02	-022	AR
NAS1473R3	56-11-05-01	-012	21
NAS1474A06	53-20-06-01	-009	02
NAS1474A08	24-60-10-01	-027	02
NAS1474A08	24-60-10-02	-027	02
NAS1474A08	27-20-05-01	-087	01
NAS1474A08	32-51-00-01	-032	04
NAS1474A08	34-10-20-01	-005	12
NAS1474A08	52-11-00-01	-044	64
NAS1474A08	52-30-00-01	-040	02
NAS1474A08	53-20-01-03	-003	06
NAS1474A08	53-20-01-03	-008	06
NAS1474A08	53-30-00-01	-034	16
NAS1474A08	57-10-01-01	-029	16
NAS1474A3	25-60-00-01	-006	04
NAS1474A3	34-47-00-01	-011	02
NAS1474A3	52-10-00-01	-012	12
NAS1474A3	52-30-20-01	-110	04
NAS1474A3	53-30-03-04	-011	AR
NAS1474A3	53-60-00-03	-002	02
NAS1474A3	53-60-00-03	-007	02
NAS1474A3	53-60-05-02	-128	04
NAS1474A3	57-40-00-02	-081	AR
NAS1474A3	57-40-00-02	-160	AR
NAS1474A3	57-51-00-02	-004	02
NAS1474C08	53-20-00-02	-014	04
NAS1474C3	32-30-00-03	-051	03
NAS1474C3	32-51-00-01	-118	01
NAS1474C3	34-47-00-01	-023	04
NAS1474C3	53-12-00-01	-011	02
NAS1474C3	53-12-00-02	-009	18
NAS1474C3	53-12-00-02	-011	17
NAS1515B4	33-40-35-02	-008	04
NAS1515D4L	32-10-00-01	-012	02
NAS1515H08L	35-20-10-01	-004	04
NAS1515M4L	27-32-00-01	-182	02
NAS1523-08R	28-11-20-01	-173	07
NAS1523-08Y	28-11-10-01	-178	06
NAS1523AA9R	28-20-60-01	-005	01
NAS1523C3B	27-40-00-01	-019	02
NAS1523C4B	27-20-05-01	-090	01
NAS1564D6-4	28-21-00-02	-272	01
NAS1564D6-4	36-15-00-02	-081	01
NAS1564D6-4	37-10-00-01	-077	02
NAS1564D8-6	36-15-00-02	-011	02
NAS1564D8-6	36-15-00-03	-020	02
NAS1578A3H3	28-21-00-01	-025	08
NAS1580A4R10	53-15-00-02	-012	01
NAS1580A5R10	53-15-00-02	-013	05
NAS1580C3R15	56-13-00-01	-003	50
NAS1580C3R7	56-11-05-01	-003	87
NAS1580C3R8D	27-10-50-01	-041	NP
NAS1580C3T8D	27-10-50-01	-042	01
NAS1581C3R12P	52-10-11-01	-018	01
NAS1581C3R15P	52-10-11-01	-017	01
NAS1581C3R2P	25-50-15-01	-035	08
NAS1581C3R2P	25-50-15-01	-084	12
NAS1581C3R3P	25-50-15-01	-083	04
NAS1581C3T2	28-11-20-01	-099	03
NAS1581C3T2	33-40-35-02	-020	22
NAS1581C3T2	57-40-00-01	-003	AR

© Cessna Aircraft Company

PART NUMBER	CH SEC SUBJ FIG	ITEM	REQ	PART NUMBER	CH SEC SUBJ FIG	ITEM	REQ
NAS1581C3T2	57-40-00-02	-018	AR	NAS1612-10	29-10-00-04	-166	01
NAS1581C3T2	57-40-00-02	-079	AR	NAS1612-10	29-10-00-04	-308	01
NAS1581C3T2	57-40-00-02	-158	AR	NAS1612-10	29-10-00-04	-315	01
NAS1581C3T2	57-50-00-01	-031	30	NAS1612-10	29-10-00-04	-325	01
NAS1581C3T2	57-51-00-02	-012	37	NAS1612-10	29-10-00-05	-158	01
NAS1581C3T2	57-51-00-02	-022	33	NAS1612-10	29-10-00-05	-184	02
NAS1581C3T2	57-60-00-01	-097	58	NAS1612-10	29-10-00-05	-226	01
NAS1581C3T3	28-11-20-01	-103	06	NAS1612-10	29-10-00-05	-308	01
NAS1581C3T3	28-11-20-01	-191	03	NAS1612-10	29-10-00-05	-314	01
NAS1581C3T3	52-10-22-01	-229	02	NAS1612-12	29-10-00-02	-101	01
NAS1581C3T3	57-51-00-02	-003	AR	NAS1612-12	29-10-00-04	-228	01
NAS1581C3T3	57-51-00-02	-023	02	NAS1612-16	29-10-00-01	-023	01
NAS1581C3T4	57-40-00-02	-012	04	NAS1612-16	29-10-00-01	-033	01
NAS1581C3T4P	57-20-00-08	-328	26	NAS1612-16	29-10-00-02	-020	02
NAS1581C3T6	55-30-10-01	-029	03	NAS1612-16	29-10-10-01	-016	01
NAS1581C3T6	57-30-00-01	-005	18	NAS1612-16	29-10-10-01	-166	01
NAS1581C4R2P	52-10-22-01	-007	02	NAS1612-2	29-20-05-01	-005	01
NAS1581C4R2P	52-10-22-01	-080	02	NAS1612-3	29-20-05-01	-007	01
NAS1581C4R2P	52-10-22-01	-156	02	NAS1612-4	27-80-00-01	-004	04
NAS1581C4R5	52-10-22-01	-239	02	NAS1612-4	27-80-00-02	-164	04
NAS1581C4T3	52-10-22-01	-237	02	NAS1612-4	27-80-00-02	-198	04
NAS1581C4T8	57-30-00-01	-004	48	NAS1612-4	27-80-00-03	-033	04
NAS1581C5T8	57-30-00-01	-003	04	NAS1612-4	27-80-00-03	-099	04
NAS1601-130	29-10-30-01	-079	01	NAS1612-4	29-10-00-01	-040	01
NAS1601-130	29-10-30-01	-154	01	NAS1612-4	29-10-00-01	-159	01
NAS1601-132	29-10-30-01	-086	01	NAS1612-4	29-10-00-02	-037	01
NAS1602-904	29-10-00-06	-182	03	NAS1612-4	29-10-00-02	-156	01
NAS1602-904	29-10-09-01	-003	02	NAS1612-4	29-10-00-04	-004	03
NAS1602-904	29-10-09-01	-076	01	NAS1612-4	29-10-00-04	-253	01
NAS1602-904	29-10-80-01	-023	01	NAS1612-4	29-10-00-04	-258	01
NAS1602-904	29-10-80-01	-095	02	NAS1612-4	29-10-00-05	-168	01
NAS1602-904	29-23-05-01	-021	02	NAS1612-4	29-10-00-05	-232	01
NAS1602-904	32-47-00-01	-004	04	NAS1612-4	29-10-00-05	-236	03
NAS1602-904	32-49-00-03	-113	04	NAS1612-4	29-10-00-05	-243	01
NAS1602-904	32-51-00-01	-079	02	NAS1612-4	29-10-00-05	-302	01
NAS1602-904	32-51-00-01	-097	02	NAS1612-4	29-10-00-05	-307	01
NAS1602-905	29-23-05-01	-017	02	NAS1612-4	29-10-00-05	-328	01
NAS1602-906	29-10-00-06	-023	01	NAS1612-4	29-10-00-08	-015	05
NAS1602-906	29-10-09-01	-301	01	NAS1612-4	29-10-00-08	-043	02
NAS1602-906	32-47-00-01	-007	02	NAS1612-4	29-10-00-08	-092	10
NAS1602-908	29-10-09-01	-081	01	NAS1612-4	29-10-00-11	-006	04
NAS1602-908	29-23-05-01	-012	01	NAS1612-4	29-10-00-11	-164	02
NAS1602-910	29-10-00-01	-017	02	NAS1612-4	29-10-00-12	-179	02
NAS1602-910	29-10-00-06	-053	01	NAS1612-4	29-10-00-12	-188	04
NAS1602-910	29-10-00-06	-096	03	NAS1612-4	29-10-00-12	-258	04
NAS1602-910	29-10-09-01	-006	02	NAS1612-4	29-10-00-12	-330	08
NAS1602-910	29-10-09-01	-078	01	NAS1612-4	29-10-07-01	-005	01
NAS1602-910	29-10-09-01	-155	01	NAS1612-4	29-10-10-01	-076	01
NAS1602-912	29-10-00-06	-092	01	NAS1612-4	29-10-10-01	-084	01
NAS1602-912	29-10-09-01	-157	01	NAS1612-4	29-10-10-01	-157	01
NAS1602-912	29-10-09-01	-227	01	NAS1612-4	29-10-10-01	-226	01
NAS1611-010	29-23-00-01	-157	01	NAS1612-4	29-10-30-01	-009	02
NAS1611-010	29-23-00-01	-238	01	NAS1612-4	29-21-00-01	-014	01
NAS1611-010	29-23-00-01	-306	01	NAS1612-4	29-23-00-01	-081	02
NAS1611-012	29-23-00-01	-100	01	NAS1612-4	29-23-00-01	-174	01
NAS1611-012	29-23-00-01	-232	01	NAS1612-4	29-23-00-01	-237	01
NAS1611-014	32-41-05-01	-014	02	NAS1612-4	29-23-00-01	-305	01
NAS1611-211	29-10-30-01	-006	01	NAS1612-4	29-23-00-01	-313	01
NAS1611-211	29-10-30-01	-160	01	NAS1612-4	29-23-00-01	-381	02
NAS1611-211	29-10-30-01	-166	01	NAS1612-4	29-23-00-01	-393	01
NAS1611-211	29-10-30-01	-229	01	NAS1612-4	29-30-00-01	-006	01
NAS1612-10	29-10-00-02	-013	02	NAS1612-4	29-30-00-01	-009	01

© Cessna Aircraft Company

PART NUMBER	CH SEC SUBJ FIG	ITEM	REQ	PART NUMBER	CH SEC SUBJ FIG	ITEM	REQ
NAS1612-4	29-30-00-01	-014	01	NAS1716C24K	30-13-10-01	-003	04
NAS1612-4	32-30-00-02	-004	01	NAS1716C32K	30-10-00-02	-083	06
NAS1612-4	32-33-00-01	-028	01	NAS1716C32K	30-10-00-02	-084	04
NAS1612-4	32-33-00-01	-077	02	NAS1716C32K	30-10-00-02	-097	02
NAS1612-4	32-43-00-02	-157	02	NAS1716C32K	30-10-00-02	-158	01
NAS1612-4	32-49-00-01	-009	01	NAS1716C40K	80-10-00-01	-154	02
NAS1612-4	32-50-25-01	-008	02	NAS1716D24K	30-10-20-01	-003	02
NAS1612-4	32-51-05-01	-095	02	NAS1716D24K	30-10-30-01	-003	02
NAS1612-4	32-51-05-01	-104	03	NAS1716D34K	28-21-00-02	-151	02
NAS1612-4	32-51-25-01	-008	02	NAS1716D36T	32-51-05-01	-002	02
NAS1612-4	78-30-10-01	-003	01	NAS1770-3	34-10-00-02	-023	01
NAS1612-4	78-30-10-01	-011	01	NAS1791A3-1	28-11-20-01	-100A	03
NAS1612-4	78-30-10-02	-078	01	NAS1791A3-1	52-10-09-01	-027A	02
NAS1612-4	78-30-10-02	-079	01	NAS1791A3-1	53-20-00-04	-040A	16
NAS1612-5	29-23-05-01	-082	01	NAS1791A3-1	53-20-00-08	-027A	01
NAS1612-5	32-51-05-01	-013	01	NAS1791A3-1	53-20-00-08	-030A	01
NAS1612-6	29-10-00-02	-017	02	NAS1791A3-1	53-20-00-08	-033A	06
NAS1612-6	29-10-00-04	-323	01	NAS1791A3-1	53-50-00-02	-011	AR
NAS1612-6	29-10-00-05	-174	01	NAS1791A3-1	53-50-00-02	-180	22
NAS1612-6	29-10-00-07	-007	02	NAS1791A3-1	53-50-00-02	-184	20
NAS1612-6	29-10-00-08	-042	02	NAS1791A3-1	55-10-00-01	-183	54
NAS1612-6	29-10-00-08	-103	02	NAS1791A3-1	57-51-00-02	-016	04
NAS1612-6	29-10-00-11	-014	05	NAS1791A3-1	57-51-00-02	-030	04
NAS1612-6	29-10-00-11	-162	02	NAS1791A3-1N	55-10-00-03	-020	04
NAS1612-6	29-20-05-01	-011	01	NAS1791A3-1N	55-10-00-03	-031	01
NAS1612-6	29-20-05-01	-019	01	NAS1791A3-2	57-30-00-01	-021	12
NAS1612-6	29-20-05-01	-021	01	NAS1791A3-3	57-30-00-01	-006	02
NAS1612-6	29-23-00-01	-079	01	NAS1791A3-4	57-30-00-01	-007	04
NAS1612-6	29-23-00-01	-301	01	NAS1791C3-1	21-27-00-01	-009A	18
NAS1612-6	32-30-00-02	-154	06	NAS1791C3-1	28-11-20-01	-104A	06
NAS1612-6	32-30-00-03	-013	02	NAS1791C3-1	28-23-00-01	-030	03
NAS1612-6	32-30-00-03	-024	02	NAS1791C3-1	29-23-05-01	-008	04
NAS1612-6	32-30-00-03	-032	02	NAS1791C3-1	30-10-15-01	-006	AR
NAS1612-6	32-30-20-01	-014	01	NAS1791C3-1	32-20-00-02	-162	04
NAS1612-6	32-30-20-01	-017	01	NAS1791C3-1	38-30-15-01	-030	08
NAS1612-6	32-31-25-01	-004	02	NAS1791C3-1	52-10-19-01	-041A	02
NAS1612-6	32-43-00-02	-004	02	NAS1791C3-1	53-30-00-01	-009	18
NAS1612-6	32-43-00-02	-272	04	NAS1791C3-1	53-30-03-04	-015	AR
NAS1612-6	78-30-10-01	-005	01	NAS1791C3-1	53-30-03-05	-015	AR
NAS1612-6	78-30-10-01	-075	01	NAS1791C3-1	53-30-03-05	-024	AR
NAS1612-6	78-30-10-01	-083	01	NAS1791C3-1	53-38-00-01	-003A	14
NAS1612-6	78-30-10-01	-090	01	NAS1791C3-1	53-38-00-01	-008A	AR
NAS1612-6	78-30-10-02	-081	01	NAS1791C3-1	53-50-00-02	-007	AR
NAS1612-6	78-30-10-02	-085	01	NAS1791C3-1	53-50-00-02	-013	22
NAS1612-6	78-30-10-02	-089	01	NAS1791C3-1	53-50-00-02	-017	12
NAS1612-6	78-30-10-02	-092	01	NAS1791C3-1	53-50-00-02	-026	AR
NAS1612-8	29-10-00-05	-153	01	NAS1791C3-1	53-50-00-02	-030	AR
NAS1612-8	29-10-00-05	-165	01	NAS1791C3-1	53-50-00-02	-035	AR
NAS1612-8	29-10-00-05	-177	01	NAS1791C3-1	53-50-00-02	-040	AR
NAS1612-8	29-10-00-05	-238	01	NAS1791C3-1	53-50-00-02	-044	AR
NAS1612-8	29-10-10-01	-008	01	NAS1791C3-1	53-50-00-02	-078	04
NAS1612-8	29-10-10-01	-159	01	NAS1791C3-1	53-50-00-02	-085	04
NAS1612-8	29-21-00-01	-007	01	NAS1791C3-1	53-50-00-02	-094	08
NAS1612-8	29-21-00-01	-009	01	NAS1791C3-1	53-50-00-02	-102	02
NAS1612-8	29-21-00-01	-011	01	NAS1791C3-1	53-50-00-02	-109	37
NAS1612-8	29-21-00-01	-022	01	NAS1791C3-1	53-50-00-02	-113	04
NAS1612-8	29-23-05-01	-087	01	NAS1791C3-1	53-50-00-02	-155	AR
NAS1612-8	32-51-05-01	-009	01	NAS1791C3-1	53-50-00-02	-162	AR
NAS1713C40K	36-13-00-01	-011	01	NAS1791C3-1	53-50-00-02	-169	AR
NAS1713C40K	80-10-00-01	-166	01	NAS1791C3-1	53-50-00-02	-173	AR
NAS1716C16K	30-13-10-01	-027	02	NAS1791C3-1	53-50-00-02	-175	AR
NAS1716C24K	30-10-00-01	-079	02	NAS1791C3-1	53-50-00-02	-190	AR

© Cessna Aircraft Company

PART NUMBER	CH SEC SUBJ FIG	ITEM	REQ
NAS1791C3-1	53-50-00-02	-192	05
NAS1791C3-1	57-40-00-01	-007	08
NAS1791C3-1NP	21-30-00-01	-005	04
NAS1801-06-10	30-10-20-01	-027	02
NAS1801-06-6	31-35-00-01	-002	04
NAS1801-06-8	33-40-17-01	-003	04
NAS1801-06-8	34-60-00-01	-078	07
NAS1801-08-6	21-60-00-01	-155	02
NAS1801-08-6	25-10-05-01	-014	02
NAS1801-08-8	25-10-05-01	-007	04
NAS1801-08-8	27-10-15-01	-005	01
NAS1801-08-8	34-60-00-01	-092	04
NAS1801-08-8	34-60-00-01	-096	02
NAS1805-4	78-30-00-01	-005	18
NAS1832-06-3	21-28-00-01	-006	04
NAS1832-06-3	21-28-00-01	-018	04
NAS1832-08-3	21-28-00-01	-012	02
NAS1832-08-3	25-10-05-01	-009	04
NAS1832-08-3M	52-10-31-01	-095	08
NAS1832-08-3M	53-21-00-01	-117	03
NAS1833-08-250	25-80-03-01	-025	03
NAS1833-08-250	25-80-03-01	-108	06
NAS1833-08-250M	52-10-31-01	-018	26
NAS1833-3-250	25-80-03-01	-022	10
NAS1833-3-250	25-80-03-01	-082	07
NAS1834-08K250	25-80-03-01	-006	02
NAS1834-08K250	25-80-03-01	-018	17
NAS1834-08K250	25-80-03-01	-045	07
NAS1834-08K250	25-80-03-01	-077	17
NAS1834-08K250	25-80-03-01	-080	21
NAS1834-08K250	25-80-03-01	-105	02
NAS1834-08K250	25-80-03-01	-107	04
NAS1834-08K250	25-80-03-01	-111	04
NAS1834-08K250	25-80-03-01	-117	05
NAS1834-3-250	25-80-03-01	-021	04
NAS1834-3-250	25-80-03-01	-083	02
NAS1870CL3-2	33-40-15-01	-008	01
NAS1870CL3-2	33-40-15-01	-020	06
NAS1870CL3-3	33-40-15-01	-007	05
NAS1922-0050-1	38-32-10-01	-016	01
NAS1922-0075-1	38-32-10-01	-008	08
NAS1922-0075-1	53-30-03-04	-085	04
NAS1922-0150-1	30-10-00-02	-153	04
NAS1922-0150-1	30-20-00-02	-017	01
NAS1922-0150-1	30-20-00-02	-023	01
NAS1922-0150-1	36-10-20-02	-008	01
NAS1922-0200-1	24-30-30-01	-011C	04
NAS1922-0200-1	36-10-20-02	-017	02
NAS1922-0200-3	36-10-20-04	-038	01
NAS1922-0225-1	30-10-00-02	-076	04
NAS1922-0225-1	30-10-00-02	-157	01
NAS1922-0225-1	36-10-20-04	-036	01
NAS1922-0275-1	21-26-00-01	-005A	02
NAS1922-0275-1	21-26-00-01	-025	05
NAS1924-107	21-25-20-01	-029	04
NAS1924-48	21-25-20-01	-023	08
NAS1924-58	21-25-20-01	-005	08
NAS1924-58	32-30-00-02	-121A	02
NAS1924-74	21-25-20-01	-044	06
NAS220C8	28-11-20-01	-172	07
NAS333CP6	27-10-50-01	-107	02
NAS333CP7-5	27-10-50-01	-199	01
NAS333CPA5	57-00-05-01	-157	28
NAS333CPA5	57-00-05-01	-159	32
NAS333CPA5	57-00-05-01	-163	32
NAS333CPA6	52-10-09-01	-016	04
NAS333CPA6	52-30-20-01	-109	04
NAS333CPA6	53-12-15-01	-162	04
NAS333CPA6	53-60-05-01	-017	04
NAS334CP27	32-10-00-01	-089	01
NAS354-5-209	32-10-30-01	-090	01
NAS354-5-425	32-10-30-01	-081	01
NAS424-5D	35-10-20-01	-021	01
NAS424-5D	35-10-20-01	-154	02
NAS427K13	27-20-05-01	-228	02
NAS427K19	27-20-05-01	-176	02
NAS428-4A12	27-25-00-01	-022	04
NAS428-4A12	27-32-00-01	-098	04
NAS428-4A12	27-36-00-01	-234	02
NAS428-4A14	27-25-00-01	-021	04
NAS428-4A5	27-10-50-01	-210	01
NAS428-4A7	27-10-30-01	-463	04
NAS428CH4A14	71-10-00-01	-087	01
NAS428CH4A16	71-10-00-01	-088	01
NAS428H3A6	27-11-00-01	-262	01
NAS428H4A6	27-10-15-01	-093	01
NAS428H4A7	55-40-00-01	-084	02
NAS42DD5-32N	36-15-00-02	-120	01
NAS42DD5-32N	52-30-00-01	-030	01
NAS42DD6-8FC	27-10-50-01	-262	02
NAS42DD6A-31A	27-10-50-01	-256	01
NAS42DD8A-64FC	27-10-50-01	-264	02
NAS42DD8A-8FC	27-10-50-01	-263	02
NAS43DD0-24FC	52-10-03-01	-034	02
NAS43DD0-32FC	21-60-00-01	-162	03
NAS43DD1-10FC	34-24-01-01	-008	01
NAS43DD10-120FC	27-10-50-02	-188	01
NAS43DD10-42FC	27-11-00-01	-244B	01
NAS43DD3-10FC	35-10-00-01	-096	01
NAS43DD3-10FC	35-10-00-01	-103	01
NAS43DD3-10N	29-10-00-06	-201	01
NAS43DD3-10N	29-10-00-11	-179	01
NAS43DD3-10N	29-10-00-11	-183	01
NAS43DD3-10N	29-23-00-01	-014	01
NAS43DD3-10N	32-33-00-01	-170	01
NAS43DD3-10N	32-49-00-02	-020	01
NAS43DD3-10N	32-50-25-01	-004	01
NAS43DD3-10N	32-51-05-01	-017	01
NAS43DD3-10N	32-51-05-01	-031	01
NAS43DD3-10N	32-51-25-01	-004	01
NAS43DD3-11FC	34-10-00-02	-031	01
NAS43DD3-11FC	34-10-00-02	-240	01
NAS43DD3-11FC	35-10-00-01	-107	01
NAS43DD3-11N	21-21-00-01	-040	01
NAS43DD3-11N	32-30-00-03	-047	03
NAS43DD3-12	52-11-20-01	-022	NP
NAS43DD3-12FC	27-20-05-02	-099	02
NAS43DD3-12FC	27-30-05-01	-242	02
NAS43DD3-12FC	28-20-00-02	-123	01
NAS43DD3-12FC	29-23-05-01	-010	04
NAS43DD3-12FC	34-10-00-02	-098	01
NAS43DD3-12FC	35-10-00-01	-080	01
NAS43DD3-12FC	35-10-20-01	-113	01
NAS43DD3-12FC	52-11-20-01	-023	01

© Cessna Aircraft Company

PART NUMBER	CH SEC SUBJ FIG	ITEM	REQ
NAS43DD3-12N	29-23-00-01	-317	01
NAS43DD3-12N	52-11-20-01	-024	01
NAS43DD3-13FC	36-10-20-03	-018	02
NAS43DD3-13N	29-10-00-06	-040	02
NAS43DD3-13N	29-10-00-06	-191	01
NAS43DD3-13N	29-10-00-11	-091	02
NAS43DD3-13N	32-33-00-01	-171	01
NAS43DD3-13N	32-49-00-03	-091	01
NAS43DD3-14N	29-23-00-01	-097	01
NAS43DD3-14N	32-33-00-01	-022	01
NAS43DD3-15FC	29-10-00-05	-028	01
NAS43DD3-15FC	32-43-00-01	-092	01
NAS43DD3-15FC	34-10-00-02	-235	01
NAS43DD3-16	29-10-00-04	-109	01
NAS43DD3-16FC	21-23-00-01	-168	01
NAS43DD3-16FC	27-13-00-01	-027	02
NAS43DD3-16FC	35-10-00-01	-077	01
NAS43DD3-16FC	35-20-00-01	-091	01
NAS43DD3-16FC	52-11-00-01	-013	01
NAS43DD3-16FC	52-11-00-01	-024	03
NAS43DD3-16N	29-10-00-04	-104	01
NAS43DD3-16N	29-10-00-06	-041	03
NAS43DD3-16N	29-10-00-06	-192	01
NAS43DD3-16N	29-10-00-11	-109	01
NAS43DD3-16N	29-10-00-11	-156	01
NAS43DD3-16N	32-30-00-03	-050A	01
NAS43DD3-16N	32-33-00-01	-240	01
NAS43DD3-16N	32-43-00-02	-019	01
NAS43DD3-16N	32-43-00-02	-242	06
NAS43DD3-16N	32-49-00-02	-090	01
NAS43DD3-16N	32-49-00-03	-089	01
NAS43DD3-16N	32-51-00-01	-111	01
NAS43DD3-17FC	27-20-00-01	-194	01
NAS43DD3-20FC	29-10-00-04	-320A	01
NAS43DD3-20N	29-10-00-09	-080	01
NAS43DD3-20N	29-10-00-11	-173	01
NAS43DD3-20N	29-10-00-11	-235	01
NAS43DD3-20N	32-33-00-01	-172	01
NAS43DD3-20N	32-49-00-02	-021	01
NAS43DD3-20N	32-49-00-02	-091	01
NAS43DD3-22N	29-10-00-11	-103	01
NAS43DD3-22N	32-49-00-03	-090	01
NAS43DD3-23FC	21-25-20-01	-084	02
NAS43DD3-23N	29-23-00-01	-013	01
NAS43DD3-23N	36-15-00-02	-043	01
NAS43DD3-24N	36-15-00-02	-173	01
NAS43DD3-24N	49-30-00-01	-019	01
NAS43DD3-25	32-49-00-01	-033	01
NAS43DD3-25FC	29-10-00-08	-059	01
NAS43DD3-25N	32-43-00-02	-020	01
NAS43DD3-26N	29-10-00-11	-086	02
NAS43DD3-27FC	27-60-20-01	-020	01
NAS43DD3-27N	27-60-20-01	-021	AR
NAS43DD3-27N	29-10-00-09	-094	AR
NAS43DD3-27N	32-33-00-01	-242	01
NAS43DD3-27N	32-43-00-02	-083	01
NAS43DD3-28FC	29-10-80-01	-031	01
NAS43DD3-28FC	32-43-00-02	-196	01
NAS43DD3-28FC	32-49-00-03	-017	01
NAS43DD3-28N	32-51-00-01	-103	01
NAS43DD3-30FC	36-10-20-03	-017	01
NAS43DD3-30N	29-10-00-07	-033	02
NAS43DD3-30N	32-49-00-02	-022	02
NAS43DD3-31FC	27-10-15-01	-115	02
NAS43DD3-32	32-49-00-01	-035	01
NAS43DD3-32FC	21-25-00-01	-089	01
NAS43DD3-32FC	35-10-00-01	-112	01
NAS43DD3-32FC	35-10-20-01	-120	01
NAS43DD3-32FC	36-15-00-01	-045	03
NAS43DD3-32N	29-23-00-01	-012	03
NAS43DD3-32N	30-13-10-01	-029	02
NAS43DD3-32N	32-33-00-01	-088	02
NAS43DD3-32N	32-33-00-01	-243	01
NAS43DD3-32N	36-15-00-02	-044	01
NAS43DD3-32N	78-30-10-02	-027	01
NAS43DD3-33N	21-21-00-01	-033	02
NAS43DD3-33N	32-43-00-02	-195	01
NAS43DD3-34FC	29-10-00-05	-110	01
NAS43DD3-35N	32-30-00-03	-048	01
NAS43DD3-36	32-49-00-01	-034	01
NAS43DD3-36FC	29-10-00-05	-024	01
NAS43DD3-36FC	32-30-00-02	-119	01
NAS43DD3-36N	29-10-00-06	-193	01
NAS43DD3-36N	32-33-00-01	-173	01
NAS43DD3-36N	32-49-00-02	-023	02
NAS43DD3-38FC	36-15-00-03	-108	01
NAS43DD3-39N	32-51-00-01	-117	01
NAS43DD3-41FC	32-30-00-02	-116	01
NAS43DD3-41N	32-33-00-01	-087	01
NAS43DD3-42N	32-30-00-03	-049	01
NAS43DD3-44	28-20-21-01	-090	01
NAS43DD3-44FC	36-15-00-02	-105	01
NAS43DD3-44N	29-10-00-11	-184	01
NAS43DD3-45FC	29-10-00-05	-092	01
NAS43DD3-45FC	32-30-00-02	-194C	01
NAS43DD3-47FC	29-10-00-08	-064	01
NAS43DD3-48	32-49-00-01	-032	01
NAS43DD3-48FC	21-23-00-01	-173	01
NAS43DD3-48FC	29-10-00-04	-304	01
NAS43DD3-48FC	32-30-00-02	-118	03
NAS43DD3-48N	32-30-00-03	-050	01
NAS43DD3-4FC	27-36-00-01	-027	01
NAS43DD3-4N	32-33-00-01	-009	01
NAS43DD3-50N	29-10-00-11	-231	01
NAS43DD3-53FC	29-10-00-05	-102	01
NAS43DD3-57FC	29-10-00-04	-237	01
NAS43DD3-58N	32-33-00-01	-013	01
NAS43DD3-58N	32-33-00-01	-241	02
NAS43DD3-59FC	32-30-00-02	-125	02
NAS43DD3-5FC	27-10-50-01	-043	01
NAS43DD3-5FC	27-60-20-01	-013	01
NAS43DD3-5N	27-60-20-01	-014	01
NAS43DD3-60FC	36-15-00-02	-172	01
NAS43DD3-64FC	32-20-00-01	-020	01
NAS43DD3-64FC	32-45-00-01	-017B	01
NAS43DD3-64N	36-15-00-02	-042	02
NAS43DD3-68N	36-15-00-02	-041	01
NAS43DD3-6FC	29-10-00-10	-076	01
NAS43DD3-6FC	29-10-00-10	-095	01
NAS43DD3-6FC	32-43-00-01	-093	01
NAS43DD3-6FC	36-15-00-01	-094	01
NAS43DD3-6N	29-10-00-06	-039	01
NAS43DD3-6N	29-23-00-01	-242	01
NAS43DD3-7	35-10-20-01	-088	04

© Cessna Aircraft Company

PART NUMBER	CH SEC SUBJ FIG	ITEM	REQ
NAS43DD3-72FC	36-15-00-03	-041	02
NAS43DD3-72N	36-15-00-02	-040	02
NAS43DD3-74FC	29-10-00-05	-192	01
NAS43DD3-75N	21-29-00-01	-004	04
NAS43DD3-77FC	32-30-00-02	-117	02
NAS43DD3-77N	32-33-00-01	-023	01
NAS43DD3-79FC	29-10-00-05	-097	01
NAS43DD3-7FC	27-60-20-01	-015	01
NAS43DD3-7FC	27-60-20-01	-022	01
NAS43DD3-7FC	35-20-00-01	-031	01
NAS43DD3-7N	27-60-20-01	-016	01
NAS43DD3-7N	27-60-20-01	-023	01
NAS43DD3-7N	29-23-05-01	-009	04
NAS43DD3-7N	32-30-00-03	-045	02
NAS43DD3-8N	32-30-00-03	-046	01
NAS43DD3-9N	32-33-00-01	-169	01
NAS43DD3-9N	32-49-00-02	-019	01
NAS43DD4-12FC	27-60-00-01	-083	01
NAS43DD4-12N	27-60-00-01	-084	01
NAS43DD4-13FC	27-20-00-01	-120	01
NAS43DD4-16FC	29-21-00-01	-003	02
NAS43DD4-24FC	27-35-00-01	-015	02
NAS43DD4-28FC	27-32-00-01	-176	01
NAS43DD4-337N	52-10-35-01	-031	01
NAS43DD4-41	22-10-10-02	-021	01
NAS43DD4-42N	32-35-00-01	-080	01
NAS43DD4-48N	32-51-05-01	-021	02
NAS43DD4-50FC	27-60-00-01	-086	01
NAS43DD4-50N	27-60-00-01	-087	01
NAS43DD4-56FC	27-32-00-01	-169	01
NAS43DD4-9	28-23-00-01	-022	NP
NAS43DD4-9FC	28-23-00-01	-023	04
NAS43DD4-9N	28-23-00-01	-024	04
NAS43DD6-21FC	52-10-35-01	-034	01
NAS43HT1-28	52-10-11-01	-260	02
NAS43HT3-11	52-10-11-01	-021	02
NAS43HT3-16	27-20-05-01	-270	03
NAS43HT3-20	27-60-00-01	-174	01
NAS43HT3-32	27-13-05-01	-154	01
NAS43HT3-32	27-60-30-01	-096	02
NAS43HT3-32	30-10-20-01	-008	02
NAS43HT3-38	30-10-30-01	-006A	02
NAS43HT3-40	30-10-20-01	-007	02
NAS43HT3-42	29-10-00-01	-173	01
NAS43HT3-48	29-10-00-01	-174	01
NAS43HT3-51	29-10-00-01	-013	01
NAS43HT3-64	30-10-00-02	-099	04
NAS43HT3-7	27-20-05-01	-103	01
NAS43HT3-8	27-25-00-02	-012	02
NAS43HT3-8	32-43-00-01	-036	04
NAS43HT3-9	32-35-00-01	-091	01
NAS43HT4-14	27-20-05-01	-097	01
NAS43HT4-28	27-20-05-01	-154	01
NAS43HT4-4	52-10-11-01	-253	02
NAS43HT4-9	27-25-00-01	-081	01
NAS43HT4-9	27-25-00-01	-181	01
NAS43HT4-9	27-25-00-01	-237	01
NAS43HT4-9	27-25-00-01	-341	01
NAS43HT4-9	53-20-03-01	-005	06
NAS43HT5-85	27-30-05-01	-154	01
NAS43HT6-12	27-10-30-01	-389	01
NAS43HT6-25	27-10-30-01	-390	01

PART NUMBER	CH SEC SUBJ FIG	ITEM	REQ
NAS43HT6-45	52-10-35-01	-033	01
NAS43HT6-8	53-30-02-03	-170	18
NAS43HT8-28	32-10-00-01	-024	01
NAS463WDD416	57-30-00-01	-016	17
NAS463WDD416H	57-30-00-01	-017	17
NAS463WDD416M	57-30-00-01	-015	06
NAS463WDD516M	57-30-00-01	-013	02
NAS463XDD10M	53-38-00-01	-009	AR
NAS463YDD10M	53-38-00-01	-007	AR
NAS464-4-12	27-25-00-01	-116	01
NAS464-4-12	27-25-00-01	-188	01
NAS464-4-12	27-25-00-01	-265	01
NAS464-4-12	27-25-00-01	-322	01
NAS464P3-10	32-43-00-01	-151	01
NAS464P3-13	32-30-00-01	-013	01
NAS464P3-15	32-30-00-01	-080	02
NAS464P3-15	32-30-00-01	-081	02
NAS464P3-17	32-30-00-01	-079	02
NAS464P3-25	57-60-00-01	-002	01
NAS464P3-8	27-25-00-01	-107	01
NAS464P3-8	27-25-00-01	-164	01
NAS464P3-8	27-25-00-01	-270	01
NAS464P3-8	27-25-00-01	-327	01
NAS464P4-5	32-31-05-01	-035	02
NAS464P5-37	32-31-05-01	-020	01
NAS464P5-42	27-30-05-01	-232	01
NAS464P6-26	57-60-00-01	-003	01
NAS464P6-48	32-51-00-01	-151	01
NAS464P6-52	32-51-00-01	-152	01
NAS509-3	22-10-10-02	-037	02
NAS509-3	27-24-10-01	-017	01
NAS509-3	27-24-15-01	-015	01
NAS509-3	27-36-00-01	-023	01
NAS509-3	52-10-03-01	-082	01
NAS509-3	52-10-11-01	-248	01
NAS509-4	27-10-50-01	-338	02
NAS509-4	27-11-00-01	-173	01
NAS509-4	27-20-05-01	-081	01
NAS509-4	27-21-00-01	-010	02
NAS509-4	27-32-00-01	-099	04
NAS509-4	32-35-00-01	-016	01
NAS509-4	32-35-00-01	-034	01
NAS509-4	55-40-00-01	-085	02
NAS509-4C	32-10-30-01	-010	02
NAS509-4C	71-10-00-01	-089	03
NAS509-5	27-33-00-01	-107	01
NAS509-5	32-10-30-01	-099	02
NAS509-5	52-10-03-01	-090	02
NAS509-5	52-10-22-02	-022	01
NAS509-5	52-10-22-02	-039	01
NAS509-5	52-10-22-02	-085	01
NAS509-7	27-20-00-01	-102	01
NAS509-7	32-51-35-01	-011	02
NAS509-7	52-10-22-02	-157	01
NAS509-7	52-10-22-02	-165	01
NAS509-8	27-11-00-01	-234	01
NAS509-8	55-40-00-01	-012	01
NAS509L3	27-24-10-01	-018	01
NAS509L3	27-24-15-01	-016	01
NAS509L5	27-33-00-01	-108	01
NAS513-18	27-20-00-01	-098	02
NAS513-4	27-10-50-01	-337	02

© Cessna Aircraft Company

PART NUMBER	CH SEC SUBJ FIG	ITEM	REQ
NAS513-4	27-11-00-01	-171	01
NAS513-4	27-21-00-01	-011	01
NAS513-5	27-10-50-01	-181	01
NAS513-5	36-10-20-02	-107	01
NAS513-5	52-10-22-02	-023	01
NAS513-5	52-10-22-02	-040	01
NAS513-5	52-10-22-02	-087	01
NAS513-5	52-10-37-01	-020	01
NAS513-7	27-20-00-01	-101	01
NAS513-7	52-10-22-02	-158	01
NAS513-7	52-10-22-02	-166	01
NAS513-8	27-10-50-01	-180	01
NAS514P632-7P	33-40-15-01	-026	03
NAS537-16P030	55-10-00-01	-100	04
NAS537-16P038	55-30-00-02	-095	04
NAS537-16P043	55-30-00-08	-014	04
NAS537-16P055	55-10-00-01	-101	02
NAS551-4D	28-21-00-03	-191	04
NAS552-4D	28-21-00-03	-189	04
NAS557-10	25-50-00-01	-101	01
NAS557-10A	30-40-00-01A	-035	01
NAS557-10B	34-10-00-02	-160	12
NAS557-10C	57-20-05-02	-094	02
NAS557-12B	34-10-00-01	-023	01
NAS557-12B	35-20-00-01	-023	02
NAS557-4C	28-20-60-01	-008	02
NAS557-4C	28-20-65-01	-006	02
NAS557-6A	28-21-00-01	-085	01
NAS557-8B	32-35-00-01	-084	01
NAS557-8B	53-20-02-01	-158	01
NAS557-8B	53-20-02-01	-168	01
NAS559-1	27-33-00-01	-106	02
NAS561-3-4	32-35-00-02	-011	01
NAS561-3-8	32-35-00-01	-003	01
NAS561-4-12	27-60-00-01	-078	01
NAS561P4-6	53-10-10-02	-012A	04
NAS561P4-6	53-10-10-02	-024A	04
NAS561P4-6	53-10-10-02	-084A	04
NAS561P4-6	53-10-10-02	-097A	04
NAS561P4-8	32-30-10-01	-004	01
NAS561P6-24	32-30-30-01	-009	01
NAS563-15	29-10-00-04	-182	01
NAS563-15	29-23-05-01	-020	01
NAS563-17	27-12-00-01	-002	08
NAS563-31	52-10-11-01	-247	01
NAS564-63	52-10-11-01	-266	01
NAS565-59	52-10-22-02	-271	02
NAS5903-6	32-41-05-01	-010	03
NAS600-5	35-20-10-01	-007	02
NAS600-5	35-20-10-01	-013	02
NAS600-7	33-40-10-01	-002	02
NAS6003U10	21-50-00-01	-010	02
NAS601-26	21-28-00-01	-016	04
NAS601-5	25-50-15-01	-025	02
NAS601-8	33-30-10-01	-002	02
NAS602-6	24-60-10-01	-182	04
NAS602-6	24-60-10-02	-182	04
NAS602-6	24-60-15-01	-182	02
NAS602-6	24-60-15-01	-255	02
NAS602-8	21-60-00-01	-151	02
NAS603-4	35-20-10-01	-002	04
NAS603-4	35-20-10-01	-010	04
NAS604-6	26-21-00-01	-010	02
NAS620-10	28-21-00-01	-087	01
NAS620-10L	21-50-00-01	-012	02
NAS620-10L	34-25-00-01	-008	02
NAS620-4	21-33-00-01	-008	02
NAS620-416L	27-35-00-02	-013	01
NAS620-5L	52-10-11-01	-088	01
NAS620-8	28-21-00-01	-003	04
NAS6203-10	53-10-01-01	-024	13
NAS6203-11	53-10-01-01	-025	05
NAS6203-11D	22-10-10-01	-039	01
NAS6203-11D	27-10-50-01	-326	01
NAS6203-11H	57-70-00-02	-019	01
NAS6203-12	53-10-01-01	-026	06
NAS6203-12D	27-10-50-01	-175	01
NAS6203-13	52-10-03-01	-002	03
NAS6203-15	52-10-13-01	-029	02
NAS6203-15D	27-10-30-01	-006	01
NAS6203-17H	27-10-30-01	-301	01
NAS6203-18D	27-10-30-01	-007	01
NAS6203-19D	27-11-00-01	-158	01
NAS6203-19H	27-60-20-01	-011	01
NAS6203-2	27-11-00-01	-101	02
NAS6203-2	27-20-05-01	-013	03
NAS6203-2	32-30-00-02	-189	02
NAS6203-2	32-43-00-02	-246	01
NAS6203-2	32-43-00-02	-251	01
NAS6203-2	32-43-00-02	-264	01
NAS6203-2	32-49-00-01	-003	01
NAS6203-2	53-20-05-01	-027	03
NAS6203-2	53-20-05-01	-030	02
NAS6203-22D	27-11-20-01	-015	01
NAS6203-27D	27-11-00-01	-164	01
NAS6203-3	27-10-50-02	-081	02
NAS6203-3	27-10-50-02	-172	02
NAS6203-3	27-24-15-01	-004	02
NAS6203-3	34-57-00-01	-006	04
NAS6203-31D	27-10-50-01	-241	01
NAS6203-32	52-10-37-01	-076	02
NAS6203-33D	27-32-00-01	-024	01
NAS6203-34	52-10-37-01	-077	02
NAS6203-34D	27-11-00-01	-176	01
NAS6203-34D	27-11-00-01	-226	01
NAS6203-4	27-10-50-02	-029	04
NAS6203-4	27-10-50-02	-078	04
NAS6203-4	27-10-50-02	-175	04
NAS6203-4	27-25-00-01	-002	08
NAS6203-4	32-49-00-01	-006	02
NAS6203-4	34-57-00-01	-008	04
NAS6203-46D	55-20-00-01	-015	02
NAS6203-4D	27-11-00-01	-077	01
NAS6203-4D	27-20-05-01	-003	01
NAS6203-5	27-25-00-01	-225	03
NAS6203-5	27-25-00-01	-240	03
NAS6203-5D	32-35-00-01	-018A	01
NAS6203-5D	32-35-00-01	-038A	01
NAS6203-6	27-10-50-01	-216	03
NAS6203-6	27-10-50-02	-176	04
NAS6203-6	53-10-10-01	-042	04
NAS6203-6	53-10-10-01	-051	04
NAS6203-6	53-10-10-01	-060	04
NAS6203-6	57-30-00-01	-008	05

© Cessna Aircraft Company

PART NUMBER	CH SEC SUBJ FIG	ITEM	REQ	PART NUMBER	CH SEC SUBJ FIG	ITEM	REQ
NAS6203-66	27-35-00-01	-008	02	NAS6204-13D	32-10-30-01	-076	02
NAS6203-6D	22-10-10-01	-023	01	NAS6204-14D	27-10-50-01	-091	03
NAS6203-6D	27-11-00-01	-151	01	NAS6204-15D	27-10-50-01	-206	01
NAS6203-6D	32-35-00-01	-004	01	NAS6204-15D	27-32-00-01	-014	01
NAS6203-6D	32-35-00-01	-023	01	NAS6204-16D	27-10-15-01	-164	01
NAS6203-6D	32-35-00-01	-035	01	NAS6204-16D	27-10-30-01	-084	01
NAS6203-6H	27-60-20-01	-154	04	NAS6204-16H	52-10-22-02	-181	01
NAS6203-7	57-20-01-03	-019	06	NAS6204-16H	52-10-22-02	-185	01
NAS6203-7D	27-10-30-01	-377	01	NAS6204-17D	27-20-05-01	-151	01
NAS6203-7D	27-11-00-01	-086	01	NAS6204-17D	27-20-05-01	-171	01
NAS6203-7D	27-80-10-01	-037	01	NAS6204-17D	27-30-05-01	-168	01
NAS6203-7H	52-10-00-01	-009	12	NAS6204-18D	27-20-00-01	-010	02
NAS6203-7H	52-10-22-02	-172	02	NAS6204-18D	27-20-05-01	-170	01
NAS6203-8	27-13-00-01	-008	01	NAS6204-18D	57-70-00-01	-038	02
NAS6203-8	27-13-00-01	-086	01	NAS6204-19D	27-20-00-01	-013	01
NAS6203-8	53-10-10-01	-016	04	NAS6204-19D	27-20-00-01	-024	01
NAS6203-8D	22-10-10-01	-022	01	NAS6204-19D	27-20-00-01	-037	01
NAS6203-8D	27-10-50-01	-159	01	NAS6204-19D	55-40-00-01	-003	01
NAS6203-8D	27-10-50-01	-198	01	NAS6204-19D	57-70-00-01	-104	02
NAS6203-8D	27-10-50-01	-234	01	NAS6204-1H	27-20-05-01	-014	01
NAS6203-8D	27-10-50-01	-303	01	NAS6204-20	52-10-22-02	-244	01
NAS6203-8D	27-10-50-01	-331	02	NAS6204-21D	27-10-30-01	-308	01
NAS6203-8D	27-11-00-01	-094	01	NAS6204-21H	57-70-00-01	-103	02
NAS6203-8D	27-24-10-01	-003	02	NAS6204-22D	27-20-00-01	-076	01
NAS6203-8D	27-24-10-01	-008	01	NAS6204-22H	27-10-30-01	-238	01
NAS6203-8H	27-60-20-01	-078	02	NAS6204-23D	27-11-00-01	-257	01
NAS6203-8H	57-70-00-02	-078	01	NAS6204-23D	27-20-00-01	-117	02
NAS6203-9D	27-10-50-01	-152	01	NAS6204-23D	27-36-00-01	-042	01
NAS6203-9D	27-10-50-01	-158	01	NAS6204-23D	55-20-00-01	-016	01
NAS6203-9D	27-10-50-01	-235	01	NAS6204-23H	57-70-00-01	-040	02
NAS6203-9D	27-24-10-01	-009	01	NAS6204-24	52-10-22-02	-241	01
NAS6203-9D	27-24-15-01	-007	02	NAS6204-24D	27-32-00-01	-227	01
NAS6203-9D	27-60-00-01	-020	02	NAS6204-24D	27-36-00-01	-032	01
NAS6204-10D	27-10-50-01	-226	02	NAS6204-27	52-10-11-01	-076	01
NAS6204-10D	27-13-00-01	-151	01	NAS6204-30	32-51-00-01	-035	02
NAS6204-10D	27-13-00-01	-165	01	NAS6204-30	53-15-00-02	-011	02
NAS6204-10D	27-20-00-01	-038	02	NAS6204-32D	32-30-00-01	-082	02
NAS6204-10D	27-20-00-01	-159	01	NAS6204-34D	27-30-05-01	-169	01
NAS6204-10D	27-30-05-01	-077	01	NAS6204-34D	27-32-00-01	-167	01
NAS6204-10H	27-20-05-01	-226	01	NAS6204-34D	55-20-00-01	-017	01
NAS6204-11D	27-20-00-01	-039	02	NAS6204-38D	57-70-00-01	-041	04
NAS6204-11D	27-20-00-01	-170	01	NAS6204-38D	57-70-00-01	-107	02
NAS6204-11D	27-20-05-01	-089	01	NAS6204-44D	32-31-05-01	-026	01
NAS6204-11D	27-20-05-01	-152	01	NAS6204-48D	27-32-00-01	-084	03
NAS6204-11D	27-20-05-02	-084	01	NAS6204-48D	32-30-00-01	-078	02
NAS6204-11D	27-50-00-01	-077	01	NAS6204-48H	27-10-30-01	-452	01
NAS6204-11D	27-50-00-01	-152	01	NAS6204-5	27-36-00-01	-085	08
NAS6204-11D	55-20-00-01	-098	02	NAS6204-52D	32-10-00-01	-003	01
NAS6204-11H	27-20-05-01	-017	01	NAS6204-55D	32-10-00-01	-011	01
NAS6204-12D	27-11-00-01	-250	01	NAS6204-5D	27-60-00-01	-025	01
NAS6204-12D	27-33-00-01	-152	01	NAS6204-5H	27-14-00-01	-003	04
NAS6204-12D	27-50-00-01	-227	01	NAS6204-60D	27-20-00-01	-040	01
NAS6204-12D	27-50-00-01	-302	01	NAS6204-6D	53-20-03-01	-004	06
NAS6204-12D	27-50-00-01	-377	01	NAS6204-7	32-51-00-01	-158	01
NAS6204-12D	27-50-00-01	-452	01	NAS6204-8H	27-20-00-01	-104	01
NAS6204-12D	32-10-30-01	-085	01	NAS6204-9D	27-10-50-01	-165	01
NAS6204-12D	57-70-00-01	-105	08	NAS6204-9D	27-20-00-01	-190	01
NAS6204-13D	27-10-50-01	-166	01	NAS6204-9D	27-60-00-01	-002	01
NAS6204-13D	27-11-00-01	-251	01	NAS6204-9H	27-10-15-01	-085	01
NAS6204-13D	27-20-00-01	-108	01	NAS6204U12	71-10-00-01	-270	02
NAS6204-13D	27-21-00-01	-014	01	NAS6205-10D	27-31-00-01	-002	01
NAS6204-13D	27-26-00-01	-002	01	NAS6205-11	28-11-55-01	-007	02

© Cessna Aircraft Company

PART NUMBER	CH SEC SUBJ FIG	ITEM	REQ
NAS6205-11D	27-13-00-01	-232	01
NAS6205-12D	27-32-00-01	-003	01
NAS6205-12D	27-32-00-01	-013	01
NAS6205-12D	27-33-00-01	-018	01
NAS6205-12D	27-33-00-01	-096	02
NAS6205-12D	27-33-00-01	-101	01
NAS6205-13D	27-20-00-01	-182	01
NAS6205-14D	27-20-00-01	-181	02
NAS6205-14D	27-33-00-01	-102	01
NAS6205-15D	27-20-00-01	-107	01
NAS6205-15D	27-20-00-01	-180	01
NAS6205-18D	27-31-00-01	-003	01
NAS6205-18D	52-10-22-02	-316	02
NAS6205-19D	27-32-00-01	-002	01
NAS6205-19D	27-32-00-01	-151	01
NAS6205-21D	27-20-00-01	-175	02
NAS6205-22	52-10-22-02	-378	01
NAS6205-24D	55-40-00-01	-002	01
NAS6205-25D	27-30-05-01	-093	01
NAS6205-38D	32-31-25-01	-012	01
NAS6205-53D	27-33-00-01	-081	01
NAS6205-53D	27-33-00-01	-091	01
NAS6205-53H	27-33-00-01	-086	01
NAS6205-7	28-11-55-01	-002	04
NAS6205C13D	27-10-50-02	-091	01
NAS6206-14D	27-10-30-01	-535	01
NAS6206-14D	55-40-00-01	-076	01
NAS6206-16D	27-10-30-01	-533	01
NAS6206-18D	55-40-00-01	-077	02
NAS6206-18D	57-70-00-01	-039	06
NAS6206-18D	57-70-00-01	-106	04
NAS6206C13D	27-13-35-01	-004	01
NAS6206C13D	27-60-40-01	-005	01
NAS6206C18D	27-13-35-01	-003	01
NAS6206C18D	27-60-40-01	-004	01
NAS6207-13D	27-20-00-01	-091	01
NAS6208-29D	32-10-00-01	-095	01
NAS620A416L	28-21-00-01	-080	01
NAS6214C21D	32-10-00-01	-113	01
NAS623-2-11	52-20-10-01	-003	01
NAS623-3-3	27-12-00-01	-006	02
NAS623-3-3	27-12-00-01	-008	12
NAS623-3-5	27-36-00-01	-014	01
NAS623-3-8	52-30-20-01	-077	04
NAS626-14	27-36-00-01	-075	01
NAS6303-9	52-10-37-01	-102	02
NAS6303P9	55-20-00-01	-086	15
NAS6303P9	55-20-00-01	-090	24
NAS6303P9	55-20-00-01	-094	19
NAS6304-18D	57-60-00-01	-004	01
NAS6304-7	32-51-00-01	-158A	01
NAS6304U12D	32-10-30-01	-085A	01
NAS6305C11D	27-10-50-01	-099	01
NAS6305C13D	27-33-00-01	-171	01
NAS6305C15D	27-10-50-01	-077	02
NAS6305C16D	27-24-05-01	-003	01
NAS6305C16D	27-33-00-01	-172	01
NAS6305C17D	27-10-50-01	-100	01
NAS6305C20D	27-24-05-01	-002	01
NAS6603H13	27-60-20-01	-018	02
NAS6604-4	53-20-00-01	-005	01
NAS6604-4	53-20-00-01	-024	01
NAS6604-4	53-20-00-01	-037	01
NAS6604-4	53-20-00-01	-152	01
NAS6604-4	53-20-00-01	-162	01
NAS6604-4	53-20-00-01	-175	01
NAS6604-44	27-25-00-01	-229	04
NAS6604D10	22-10-10-02	-015	01
NAS6604D10	27-10-30-01	-076	01
NAS6604D10	27-10-30-01	-151	01
NAS6604D19	22-10-10-02	-020	01
NAS6605H44	27-30-05-01	-151	01
NAS6605H53	27-33-00-01	-076	01
NAS6606-29	27-25-00-01	-093	01
NAS6607D18	27-36-00-01	-078	01
NAS6608H1	27-31-00-01	-013	01
NAS6608H1	27-31-00-01	-023	01
NAS6704U6	78-30-00-01	-006	24
NAS6706HE-60	52-10-03-01	-092	01
NAS6708DE44	52-10-00-01	-075	02
NAS686C08	54-50-00-01	-101	12
NAS686C08MK	54-50-00-01	-087	04
NAS686C3	21-30-00-01	-006	04
NAS686C3	53-20-00-02	-010A	05
NAS686C3	53-20-00-03	-008A	01
NAS686C3	53-20-00-05	-017A	01
NAS686C3	53-20-00-06	-010A	01
NAS686C3	53-20-00-06	-085A	02
NAS686C3	53-20-00-06	-090A	02
NAS686C3	53-20-00-07	-012A	01
NAS686C3	53-20-03-04	-010	02
NAS686C3	53-20-05-01	-022	04
NAS686C3	53-20-05-01	-032	02
NAS686C3	54-50-00-01	-103	04
NAS686C3M	21-27-00-01	-009B	18
NAS686C3M	28-11-20-01	-104B	06
NAS686C3M	32-20-00-02	-163	04
NAS686C3M	53-10-01-01	-028A	01
NAS686C3M	53-15-00-02	-172A	01
NAS686C3M	53-15-00-02	-174A	01
NAS686C3M	53-20-02-07	-027	04
NAS686C3M	53-20-03-03	-007	25
NAS686C3MK	54-50-00-01	-089	04
NAS687A3	30-10-00-02	-087	02
NAS687A3	30-10-00-02	-090	02
NAS697A4	32-31-25-01	-031	02
NAS697C04L	52-10-31-01	-010A	01
NAS697C08M	54-50-00-01	-191	AR
NAS7034H02	57-20-01-05	-021	04
NAS7034H02	57-20-01-06	-008	06
NAS7035H02	57-20-01-12	-008	02
NAS7035H03	57-20-01-06	-013	04
NAS7035H03	57-20-01-06	-021	02
NAS7035H03	57-20-01-06	-088	02
NAS7035H03	57-20-01-06	-097	04
NAS7035H03	57-20-01-07	-008	04
NAS7035H03	57-20-01-07	-016	02
NAS7035H03	57-20-01-07	-081	13
NAS7035H03	57-20-01-07	-088	02
NAS7035H03	57-20-01-07	-096	04
NAS7035H03	57-20-01-08	-009	04
NAS7035H03	57-20-01-08	-016	04
NAS7035H03	57-20-01-08	-088	02
NAS7035H03	57-20-01-08	-096	04

© Cessna Aircraft Company

PART NUMBER	CH SEC SUBJ FIG	ITEM	REQ	PART NUMBER	CH SEC SUBJ FIG	ITEM	REQ
NAS7035H03	57-20-01-09	-010	02	NAS75-3-009	27-11-00-01	-029	01
NAS7035H03	57-20-01-09	-018	06	NAS75-3-009	27-35-00-01	-024	01
NAS7035H03	57-20-01-09	-083	08	NAS75-3-009	32-20-00-02	-088	01
NAS7035H03	57-20-01-09	-090	02	NAS75-3-014	52-40-01-01	-003	02
NAS7035H03	57-20-01-09	-097	02	NAS75-3-125	52-10-37-01	-086	02
NAS7035H03	57-20-01-11	-020	02	NAS75-4-008	27-11-00-01	-032	01
NAS7035H03	57-20-01-11	-028	04	NAS75-4-008	27-35-00-01	-022	01
NAS7035H03	57-20-01-11	-088	02	NAS75-4-009	32-30-00-01	-095	02
NAS7035H03	57-20-01-11	-098	02	NAS75-4-024	27-25-00-01	-091	01
NAS7035H03	57-20-01-12	-079	02	NAS75-4-024	27-25-00-01	-162	01
NAS7035H05	27-10-50-02	-010	10	NAS75-4-024	27-25-00-01	-254	01
NAS7035H05	27-10-50-02	-016	06	NAS75-4-024	27-25-00-01	-311	01
NAS7035H05	57-10-02-02	-033	34	NAS75-4-024	32-30-00-01	-096	02
NAS7035H05	57-20-01-12	-080	02	NAS75-4-025	27-36-00-01	-043	01
NAS7035H06	57-10-02-02	-008	04	NAS75-4-104	32-35-00-01	-079	01
NAS7035H06	57-10-02-02	-012	02	NAS75-5-005	27-32-00-01	-029	04
NAS7035H06	57-10-02-02	-024	04	NAS75-5-7	55-40-00-01	-088	08
NAS7035H07	27-20-05-01	-161B	03	NAS75-6-003	55-20-00-01	-037	02
NAS7035H07	57-10-02-02	-013	01	NAS75-6-004	57-60-00-02	-013	02
NAS7035H07	57-10-02-02	-025	02	NAS75-6-005	55-10-00-01	-023	01
NAS7035H08	27-20-05-01	-161C	01	NAS75-6-006	55-10-00-01	-024	01
NAS7035H08	57-10-02-02	-019	04	NAS75-6-007	27-10-30-01	-462	01
NAS7035H08	57-10-02-02	-029	04	NAS75-6-007	55-40-00-01	-021	02
NAS7035H09	57-10-02-02	-020	02	NAS75-6-008	57-60-00-02	-009	02
NAS7035H09	57-10-02-02	-030	02	NAS75-6-009	27-10-30-01	-534	01
NAS72-3-003	52-10-03-01	-085	02	NAS75-6-009	57-60-00-02	-007	01
NAS72-3-005	36-10-20-03	-081	02	NAS75-6-013	32-31-05-01	-028	04
NAS72-3-005	52-10-37-01	-013	02	NAS75-7-008	57-10-02-01	-559	01
NAS72-3-105	52-30-20-01	-103	01	NAS75-7-011	57-80-00-01	-034	01
NAS72-3E112	52-30-20-01	-098	01	NAS75-7-016	27-36-00-01	-047	01
NAS72-4-009	27-36-00-01	-008	01	NAS75-9-008	27-36-00-01	-049	01
NAS72-4-009	27-36-00-01	-036	01	NAS75-9-009	53-15-00-02	-019	01
NAS72-4E003	52-10-11-01	-182	01	NAS75-9-011	53-15-00-02	-020	01
NAS72-4E008	52-10-11-01	-164	01	NAS7502-4	56-20-00-01	-002	24
NAS72-4E103	52-10-11-01	-173	02	NAS7502U2	52-40-01-01	-017	01
NAS72-4E103	52-10-11-01	-226	01	NAS7502U2	55-30-10-01	-016	16
NAS72-4E105	52-10-11-01	-078	01	NAS7502U3	52-40-11-01	-007	04
NAS72-5-003	52-10-22-02	-004	02	NAS7503U2	53-50-00-02	-153	AR
NAS72-5-003	52-10-22-02	-016	02	NAS7503U2	53-50-00-02	-160	AR
NAS72-5-003	52-10-22-02	-030	AR	NAS7503U2	53-50-00-02	-167	AR
NAS72-5-004	52-10-22-02	-035	01	NAS7503U2	54-60-00-01	-003	AR
NAS72-5-004	52-10-22-02	-077	01	NAS7503U2	54-60-00-01	-081	14
NAS72-5-004	52-10-22-02	-082	01	NAS7503U2	54-60-00-01	-085	AR
NAS72-5-004	52-10-22-02	-324	01	NAS7503U2	54-60-00-01	-089	14
NAS72-5-009	52-10-22-02	-317	02	NAS7503U2	54-60-00-01	-166	AR
NAS72-5-010	52-10-22-02	-252	01	NAS7503U2	54-60-00-01	-172	AR
NAS72-5-010	52-10-22-02	-390	01	NAS7503U2	54-60-00-01	-179	AR
NAS72-5-011	52-10-22-02	-386	01	NAS7503U3	21-27-00-01	-008	18
NAS72-5-012	52-10-03-01	-100	02	NAS7503U3	53-30-00-01	-007	18
NAS72-5-012	52-10-22-02	-256	01	NAS7503U3	53-38-00-01	-002	14
NAS72-6-008	27-36-00-01	-076	01	NAS7503U3	53-42-02-01	-007	112
NAS72-6E301	52-10-22-02	-336	01	NAS7503U3	53-50-00-01	-152	AR
NAS72-6E302	52-10-22-02	-337	01	NAS7503U3	53-50-00-02	-024	AR
NAS720B10-6	28-20-10-01	-003	01	NAS7503U3	53-50-00-02	-033	AR
NAS720B8-5	28-20-10-01	-004	01	NAS7503U3	53-50-00-02	-088	26
NAS74A3-002P	27-13-05-01	-176	01	NAS7503U3	53-50-00-02	-105	AR
NAS75-10-016	53-22-00-09	-006A	01	NAS7503U3	53-50-00-02	-152	AR
NAS75-10-016	57-80-00-01	-011	01	NAS7503U3	53-50-00-02	-159	AR
NAS75-10-016	57-80-00-01	-022	01	NAS7503U3	53-50-00-02	-166	AR
NAS75-12-027	55-10-00-01	-112	02	NAS7503U3	53-50-00-02	-171	AR
NAS75-3-003	32-30-00-01	-023	02	NAS7503U3	53-50-00-02	-188	AR
NAS75-3-006	27-10-50-01	-243	01	NAS7503U3	53-50-00-03	-006	AR

© Cessna Aircraft Company

PART NUMBER	CH SEC SUBJ FIG	ITEM	REQ
NAS7503U3	53-50-00-03	-010	AR
NAS7503U3	55-30-10-01	-002	AR
NAS7503U3	55-30-10-01	-007B	AR
NAS7503U3	55-30-10-01	-013	56
NAS7503U3	55-30-10-01	-020	02
NAS7503U3	55-30-10-01	-020A	04
NAS7503U3	55-30-10-01	-032	56
NAS7503U3	55-30-10-01	-040	22
NAS7503U4	52-10-09-01	-021	02
NAS7503U4	53-12-15-01	-156	04
NAS7503U4	53-38-00-01	-005	AR
NAS7503U4	53-50-00-01	-151	AR
NAS7503U4	54-60-00-01	-168	AR
NAS7503U4	54-60-00-01	-174	AR
NAS7503U4	54-60-00-01	-181	AR
NAS7503U4	55-30-10-01	-014	24
NAS7503U4	55-30-10-01	-031	34
NAS7503U4	55-30-10-01	-035	30
NAS7503U5	52-10-09-01	-008	02
NAS7503U5	52-10-09-01	-020	02
NAS7503U5	53-12-15-01	-154	08
NAS7503U5	53-50-00-01	-153	02
NAS7503U5	55-30-10-01	-033	02
NAS7503U5	55-30-10-01	-036	02
NAS7503U6	52-10-09-01	-005	08
NAS7503U6	53-12-15-01	-161	04
NAS7503U6	53-12-15-01	-164	04
NAS7503U6	53-50-00-01	-154	02
NAS7503U7	52-10-09-01	-006	04
NAS7503U7	52-10-09-01	-015	04
NAS7503U7	53-12-15-01	-160	08
NAS7503U7	53-50-00-01	-155	02
NAS7503U8	53-50-00-01	-156	02
NAS7503U9	53-50-00-01	-157	01
NAS7503U9	53-50-00-02	-089	09
NAS7504U12	57-40-10-01	-310	16
NAS7504U7	52-10-19-01	-011	02
NAS7505U13	57-40-10-01	-306	16
NAS76A16-024N	52-10-19-01	-081	02
NAS76A3-016P	27-10-50-01	-249	02
NAS76A4-009	27-20-00-01	-032	01
NAS76A4-013	27-10-50-01	-019	01
NAS76A4-023	27-10-50-01	-020	01
NAS76A5-006	55-30-00-08	-022	01
NAS76A5-006	55-30-00-08	-027	01
NAS76A5-007	55-30-00-08	-023	02
NAS76A5-009	55-30-00-08	-028	02
NAS77-10-025	52-10-11-01	-093	01
NAS77-10-030	57-80-00-01	-006	04
NAS77-12-035	52-10-22-02	-179	02
NAS77-14-015	52-10-22-02	-410	01
NAS77-18-030	52-10-11-01	-153	01
NAS77-18-063	52-10-11-01	-094	01
NAS77-3-009	52-10-21-01	-097	04
NAS77-3-010	52-10-03-01	-006	01
NAS77-3-010	52-10-21-01	-042	02
NAS77-3-010	52-10-21-01	-092	02
NAS77-3-011	52-10-00-01	-083	01
NAS77-3-030	52-10-21-01	-023	02
NAS77-3-11	52-10-37-01	-009A	01
NAS77-4-008	27-20-05-01	-018	01
NAS77-4-008	52-10-11-01	-162	01
NAS77-4-008	52-10-11-01	-192	01
NAS77-4-010	52-10-22-02	-187	02
NAS77-4-010	52-10-22-02	-395	02
NAS77-4-025	52-10-11-01	-004	01
NAS77-4-028	27-10-30-01	-239	01
NAS77-4-041	25-50-15-01	-019	01
NAS77-5-010	55-20-00-01	-103	04
NAS77-5-013	52-10-22-01	-025	02
NAS77-5-013	52-10-22-01	-097	02
NAS77-5-013	52-10-22-01	-175	02
NAS77-5-013	52-10-22-01	-248	02
NAS77-5-013	52-10-22-02	-247	03
NAS77-5-013	52-10-22-02	-259	02
NAS77-5-013	52-10-22-02	-301	02
NAS77-5-013	52-10-22-02	-332	01
NAS77-5-013	52-10-22-02	-381	01
NAS77-5-013	52-10-22-02	-393	02
NAS77-5-013	52-10-22-02	-398	02
NAS77-5-015	55-10-00-02	-166	01
NAS77-5-015	55-10-00-02	-182	02
NAS77-5-016	27-10-50-01	-078	01
NAS77-5-016	32-31-25-01	-014	02
NAS77-5-016	52-10-35-01	-081	01
NAS77-5-016	57-21-00-01	-027	02
NAS77-5-023	27-10-50-01	-079	01
NAS77-5-023	55-10-00-02	-167	02
NAS77-5-023	55-10-00-02	-183	04
NAS77-5-030	55-10-00-02	-168	01
NAS77-5-030	55-10-00-02	-186	01
NAS77-5-075	56-15-00-01	-011	01
NAS77-5-40	55-10-00-02	-184	01
NAS77-6-009	52-10-03-01	-096	02
NAS77-6-039	55-10-00-01	-014	02
NAS77-6-40	25-50-15-01	-018	01
NAS77-7-086	57-20-00-04	-027	02
NAS77-7-086	57-20-00-04	-033	02
NAS77-7-086	57-20-00-04	-040	02
NAS77-7-086	57-20-00-04	-078	02
NAS77-7-086	57-20-00-04	-086	02
NAS77-7-086	57-20-00-04	-091	02
NAS77-7-086	57-20-00-04	-099	02
NAS77-7-086	57-20-00-04	-104	02
NAS77-8-011	52-10-22-02	-248	02
NAS77-8-011	52-10-22-02	-257	04
NAS77-8-011	52-10-22-02	-260	01
NAS77-8-011	52-10-22-02	-382	01
NAS77-8-011	52-10-22-02	-394	01
NAS77-8-011	52-10-22-02	-399	01
NAS77-8-018	52-10-22-02	-302	02
NAS77-8-018	52-10-22-02	-329	02
NAS77-8-020	52-10-11-01	-157	01
NAS77-8-025	52-10-22-02	-266	01
NAS77-8-025	57-80-00-01	-084	04
NAS77-8-038	52-10-11-01	-095	01
NAS77-9-028	52-10-22-02	-303	02
NAS77-9-028	52-10-22-02	-309	01
NAS77A4-006	27-32-00-01	-233	02
NAS77C4-005	52-10-37-01	-081A	02
NAS77C4-005	52-10-37-01	-082A	02
NAS8602-3	54-60-00-01	-160	08
NAS8603-10	76-10-00-01	-006	05
NAS8803A3	57-30-00-01	-001	06

© Cessna Aircraft Company

PART NUMBER	CH SEC SUBJ FIG	ITEM	REQ	PART NUMBER	CH SEC SUBJ FIG	ITEM	REQ
NH1008802-10	30-13-00-01	-004	01	P4	11-00-00-01	-004	AR
NH3000081-10	30-40-00-01	-016	02	P439003	25-80-02-01	-001	AR
NH3000081-10	30-40-00-01A	-025	02	P618002	38-32-10-01	-005	AR
NH3000082-10	30-40-00-01	-006	01	P618007	38-30-05-01	-003	AR
NH3000082-10	30-40-00-01A	-009	01	PB35	53-20-06-01	-015	04
NH3000236-10	30-40-00-01	-013	01	PB35	53-20-06-01	-037	10
NH3000236-10	30-40-00-01A	-022	01	PFSC35-38A	24-60-05-01	-019	08
NM102420-0150	21-21-00-01	-006	04	PFSC35-38A	24-60-05-01	-102	02
NM102420-0150	21-21-00-01	-025	02	PFSC35-38A	24-60-05-02	-019	08
NM102420-0150	21-25-00-01	-013	02	PFSC35-38A	24-60-05-02	-103	02
NM102420-0150	21-60-00-01	-076	02	PH	11-00-00-01	-082	AR
NM102420-0150	30-10-00-01	-005	02	PK	11-00-00-01	-044	AR
NM102420-0150	30-10-00-02	-152	04	PKG.M0.6SL.LN	23-50-20-01	-022	01
NM102420-0150	30-10-20-01	-009	03	PLC420-06	38-32-10-01	-003	01
NM102420-0150	30-13-00-01	-003	01	PLCD170-06	38-32-10-01	-002	01
NM102420-0150	30-13-00-01	-014	02	PM-53	53-10-10-01	-079	01
NM102420-0150	36-10-20-02	-082	02	PP	11-00-00-01	-014	AR
NM102420-0150	36-10-20-04	-082	04	PR	11-00-00-01	-015	AR
NM102420-0200	21-21-00-01	-016	02	PRB35	24-60-40-01	-007	04
NM102420-0200	36-10-20-02	-095	04	PT	11-00-00-01	-016	AR
NM102420-0200	36-10-20-04	-086	04	PU	11-00-00-01	-017	AR
NM102420-0200	36-10-20-04	-096	05	PX9310	80-10-00-01	-178	NP
NM103303-0100	49-10-00-01	-024	01	PX9310-1	80-10-00-01	-178A	01
NRC-D1907	33-40-35-02	-009	04	Q4681	33-40-35-02	-001	01
NS-5DMG2-RXA	31-20-00-01	-001	01	Q4681	33-40-35-02	-002	01
OB	11-00-00-01	-091	AR	QAR200-30-04	31-37-00-01	-001	01
OD	11-00-00-01	-055	AR	R-1807	25-25-00-01	-004	01
OE	11-00-00-01	-006	AR	R-1808	25-25-00-01	-005	02
OH	11-00-00-01	-034	AR	R6	25-50-00-01	-017	02
OK	11-00-00-01	-028	AR	R600-3-R-F-100	49-40-05-01	-004	01
OO	11-00-00-01	-010	AR	RA	11-00-00-01	-098	AR
OWL100-04	33-50-00-01	-001	01	RB9526	28-11-45-01	-002	02
OY	11-00-00-01	-029	AR	RB9526	28-11-50-01	-001	01
P12023	23-15-00-01	-001	01	RB9526	57-40-00-02	-083	02
P12107	23-15-00-01	-002	01	RD239-A1B1	33-10-35-01	-007	03
P12949	23-15-00-01	-075	01	RD55193	28-20-05-01	-008	01
P12949	23-15-00-01	-079	01	RD55383	28-20-05-01	-011	01
P13167	23-15-00-01	-014	01	RGS10-48	34-31-00-01	-005	01
P13242-006	23-15-00-01	-013	01	RL-3516-CES	35-20-15-01	-009	01
P13242-007	23-15-00-01	-013A	01	RL-3516-F-CES	35-20-15-01	-008	01
P13989	23-15-00-01	-004	01	RP	11-00-00-01	-092	AR
P14126	23-15-00-01	-008	01	RR55395	28-20-05-01	-007	01
P14291-002	23-15-00-01	-005	01	RS-3516-3510-CES	35-20-15-01	-007	01
P18M30	36-15-00-02	-101	01	RV05-454	28-20-30-01	-029	02
P18M30	52-11-00-01	-018	01	RV6NAYFD103A	31-10-10-01	-006	01
P21018	35-10-20-01	-020	01	RV6NAYFD103A	31-10-15-01	-010	01
P21018	35-10-20-01	-163	01	S1003-103A	32-35-00-01	-019A	01
P21087-1	35-20-00-01	-011	01	S1003-103A	32-35-00-01	-040A	01
P22016-15	35-10-20-01	-025	01	S1003-25A	36-10-20-01	-030	04
P22016-17	35-10-20-01	-150	01	S1003-25A	36-10-20-03	-080	02
P24028	35-10-20-01	-018	01	S1003-66A	32-35-00-01	-076	01
P24028	35-10-20-01	-164	01	S1003-70A	32-35-00-01	-019	01
P2A1780	27-33-00-01	-009	01	S1003-70A	32-35-00-01	-040	01
P3A1720	27-31-00-01	-010	02	S1003-9A	36-10-20-03	-096	02
P3A1720	27-32-00-01	-161	02	S1004-15A	27-60-00-01	-098	02
P3A1740	27-20-00-01	-188	02	S1010-832-04	25-80-03-01	-020	28
P3A1740	52-10-22-02	-024	01	S1010-832-04	25-80-03-01	-081	36
P3A1740	52-10-22-02	-043	01	S101813PG	21-50-00-01	-016	01
P3A1740	52-10-22-02	-083	01	S101813PG	21-50-00-01	-017	01
P3A1740L	52-10-22-02	-025	01	S101813PG	30-10-30-01	-075	01
P3A1740L	52-10-22-02	-044	01	S101813PG	30-10-30-01	-076	01
P3A1740L	52-10-22-02	-084	01	S101813PG	30-13-10-01	-096	01

© Cessna Aircraft Company

PART NUMBER	CH SEC SUBJ FIG	ITEM	REQ
S101813PG	30-13-10-01	-097	01
S101813PG	30-20-00-02	-036	01
S101813PG	30-20-00-02	-037	01
S101816PG	21-50-00-01	-024	01
S101816PG	30-10-00-02	-167	01
S101816PG	30-10-00-02	-168	01
S101816PG	30-10-00-02	-169	01
S101816PG	30-10-00-02	-170	01
S101816PG	30-10-00-02	-171	01
S101816PG	30-10-00-02	-172	01
S101816PG	30-10-20-01	-020	01
S101816PG	30-10-20-01	-021	01
S101816PG	30-10-20-01	-022	01
S101816PG	30-10-20-01	-023	01
S101816PG	30-10-30-01	-078	01
S101816PG	30-10-30-01	-079	01
S101816PG	30-13-10-01	-088	01
S101816PG	30-13-10-01	-089	01
S101816PG	30-13-10-01	-090	01
S101816PG	30-13-10-01	-091	01
S101816PG	30-20-00-01	-006	01
S101816PG	30-20-00-01	-007	01
S101816PG	30-20-00-01	-010	01
S101816PG	30-20-00-01	-011	01
S102642PG	30-10-30-01	-081	01
S102642PG	30-10-30-01	-082	01
S1050-1	23-13-00-01	-042	AR
S1050-1	24-60-05-01	-007	AR
S1050-1	24-60-05-02	-007	AR
S1050-1	32-43-00-01	-095	01
S1050-1	34-10-00-02	-171	AR
S1050-1	53-22-00-02	-013	AR
S1050-1	53-22-00-02	-087	AR
S1050-1	53-22-00-03	-017	AR
S1050-1	53-22-00-03	-088	AR
S1050-1	53-22-00-04	-014	AR
S1050-1	53-22-00-04	-091	AR
S1050-1	53-22-00-07	-017	AR
S1050-1	53-22-00-07	-087	AR
S1050-1	53-22-00-07	-163	AR
S1050-1	53-22-00-08	-014	AR
S1050-1	53-22-00-08	-090	AR
S1050-1	53-22-00-18	-009	AR
S1050-1	53-22-00-19	-010	AR
S1050-1-2.00	38-32-10-01	-009	01
S1050-1-3.00	53-20-05-01	-014	01
S1050-1-3.85	27-50-00-01	-024	01
S1050-2	57-20-00-04	-021	AR
S1050-3	52-10-03-01	-167	AR
S1050-3-5.50	28-20-21-01	-023	02
S1050-4-5.50	55-30-00-05	-016	01
S1102-1X	23-50-15-01	-004	01
S1102-1X	23-50-15-01	-009	01
S1102-1X	23-50-20-01	-019	01
S1102-3	23-50-20-01	-020	01
S1103-1	23-50-15-01	-003	01
S1103-1	23-50-15-01	-008	01
S1104-3	27-36-00-01	-021	01
S1105-3	27-36-00-01	-022	01
S1105-3	27-60-00-01	-167	02
S1105-3	27-60-00-01	-178	02
S1105-3	36-10-20-02	-103	01
S1105-3	52-30-20-01	-034	01
S1105-3L	27-24-15-01	-014	01
S1188-3	52-40-25-01	-002	02
S1188-3	52-40-29-01	-004	02
S1188-3	52-40-49-01	-004	02
S1188-4	52-40-51-01	-011	06
S1188-6	52-40-51-01	-031	06
S1196-2	23-50-15-01	-005	02
S1196-2	23-50-15-01	-010	02
S11K4R	27-20-05-01	-247	02
S11L-161C	27-20-05-01	-248	04
S11L-162C	27-20-05-01	-249	02
S1212-58	29-10-80-01	-151	02
S133-3-.188	27-25-00-01	-104	01
S133-3-.188	27-25-00-01	-171	01
S133-3-.188	27-25-00-01	-277	01
S133-3-.188	27-25-00-01	-334	01
S133-3-.312	52-10-19-01	-158	01
S133-3C1.215	57-40-10-01	-322	04
S133-3C2.109	57-40-10-01	-323	04
S133-3C2.330	57-40-10-01	-321	08
S133-4C1.275	27-80-10-01	-026	01
S133-4C1.525	27-80-10-01	-025	01
S133-4P.390	27-60-00-01	-085	01
S133-4P.620	27-60-00-01	-089	01
S133-6-1.625	52-10-19-01	-171	01
S138-6	35-20-00-01	-020	01
S1389-9	52-10-31-01	-112	AR
S1438-2	52-40-25-01	-005	02
S1438-2	52-40-51-01	-005	02
S1438-2	52-40-51-01	-023	02
S1438-26	56-15-00-01	-014	01
S1438-37	32-43-00-01	-034	08
S1438-43	52-40-37-01	-007	02
S1438-43	52-40-37-01	-156	02
S1438-6	56-15-00-01	-015	01
S1438-8	27-60-00-01	-154	01
S1450-04K16-063	27-10-15-01	-094	01
S1450-10S30-045	57-51-00-01	-120	AR
S1450-12C18-016L	52-10-22-02	-190	01
S1450-12C18-016P	27-25-00-02	-020	28
S1450-14S20-090	28-11-30-01	-023	01
S1450-16H22-016L	52-10-22-02	-263	01
S1450-16H22-032L	52-10-22-02	-264	01
S1450-1C4-032P	27-25-00-02	-031	03
S1450-1C4-032P	27-35-00-02	-006	06
S1450-2-14-032	21-50-10-01	-052	04
S1450-3-10-032	27-20-05-01	-010	02
S1450-3-10-063	52-30-20-01	-099	02
S1450-3-10-063	52-30-20-01	-104	02
S1450-3-14-032	30-40-00-01A	-003	07
S1450-3-8-032	55-20-00-01	-022	02
S1450-3A5-032Z	52-10-21-01	-082	01
S1450-3A5-032Z	52-10-21-01	-102	01
S1450-3H7-016L	52-10-21-01	-041	02
S1450-3H9-040	52-10-00-01	-010	04
S1450-4-10-032	27-25-00-01	-080	01
S1450-4-10-032	27-25-00-01	-180	01
S1450-4-10-032	27-25-00-01	-236	01
S1450-4-10-032	27-25-00-01	-340	01
S1450-4-10-032	52-10-11-01	-079	01
S1450-4-10-032	55-20-00-01	-019	01

© Cessna Aircraft Company

PART NUMBER	CH SEC SUBJ FIG	ITEM	REQ	PART NUMBER	CH SEC SUBJ FIG	ITEM	REQ
S1450-4-12-032	27-13-05-01	-229	02	S1741-3	31-20-00-01	-008	01
S1450-4-12-032	52-10-11-01	-165	01	S1741-3	52-30-00-01	-029	05
S1450-4-12-063	26-20-15-01	-004	04	S1741-3	57-60-00-01	-079	04
S1450-4-12-063	27-10-50-01	-261	06	S1741-5	28-40-10-01	-005	01
S1450-4-12-063	52-10-11-01	-172	01	S1741-5	36-10-20-03	-102	04
S1450-4-12-063	57-40-10-01	-311	16	S1741-5	38-30-05-01	-007	02
S1450-4-14-050C	27-80-10-01	-027	02	S1742-2	28-11-10-01	-168	01
S1450-4-14-063	27-20-00-01	-043	04	S1819-4	28-21-00-01	-078	01
S1450-4-14-063	52-10-11-01	-267	01	S1891-10	30-40-00-01	-023	02
S1450-4-16-032	27-25-00-01	-113	01	S1891-12	21-25-00-02	-021	10
S1450-4-16-032	27-25-00-01	-177	01	S1891-12S	30-20-00-01	-025	01
S1450-4-16-032	27-25-00-01	-248	01	S1891-16	21-25-00-02	-022	02
S1450-4-16-032	27-25-00-01	-305	01	S1891-20S	21-25-75-01	-018	01
S1450-4-8-040	27-10-30-01	-309	01	S1891-20S	30-20-00-01	-024	01
S1450-4C17-032P	27-25-00-02	-011	02	S1891-32	21-26-00-01	-011	02
S1450-4S10-032	27-36-00-01	-005	01	S1891-40	21-23-00-01	-012	04
S1450-4S10-032	27-36-00-01	-033	02	S1891-40	21-23-00-01	-077	AR
S1450-5-12-035	57-40-10-01	-308	16	S1891-40	21-25-00-01	-017	04
S1450-5B12-125	24-60-10-01	-326	08	S1891-40	21-25-00-01	-076	AR
S1450-5B12-125	24-60-10-02	-325	07	S1891-40	21-25-00-01	-081	02
S1450-5B12-125	24-60-15-01	-084	06	S1891-40	21-25-00-02	-017	31
S1450-5S12-063	57-51-00-01	-083	01	S1891-40	21-50-20-01	-014	08
S1450-5S12-063	57-51-00-01	-155	02	S1891-48	21-26-00-01	-026	02
S1450-6N10-016L	52-10-03-01	-009	AR	S1891-6	30-40-00-01A	-045	02
S1450-6S16-063	57-51-00-01	-005	02	S1891-6	53-30-02-01	-008	08
S1450-6S16-063	57-51-00-01	-081	01	S1891-64S	38-30-15-01	-013	01
S1450-6S16-063	57-51-00-01	-157	01	S1891H48S	27-40-00-01	-102	01
S1450-7S12-063	57-51-00-01	-084	01	S1896-10L2	27-50-00-01	-391	10
S1450-7S12-063	57-51-00-01	-156	01	S1896-2L2	52-10-03-01	-011	01
S1450-7S15-045	57-51-00-01	-119	01	S1896-2L2	52-10-11-01	-083	01
S1450-7S15-045	57-51-00-01	-179	01	S1896-2L2	52-10-21-01	-093	01
S1450-7S15-045	57-51-00-01	-189	01	S1896-2L2	52-10-21-01	-098	01
S1450-8-21-062	27-31-00-01	-014	01	S1896-8L2	52-10-11-01	-015	02
S1450-8-21-062	27-31-00-01	-024	01	S1914-4	52-20-10-01	-004	01
S1450-8H14-032	52-10-35-01	-096	AR	S1975-2	52-30-40-01	-002	02
S1450-8H14-063	52-10-35-01	-095	04	S1979-1	29-10-80-01	-176	02
S1450-8H16-016L	52-10-22-02	-261	01	S2-029S455-70	30-10-30-01	-019	01
S1450-8H16-032L	52-10-22-02	-262	01	S2018-1	27-20-05-01	-086	01
S1450-8S16-063	57-51-00-01	-006	02	S202RW1800	53-10-01-01	-005	01
S1450-8S16-063	57-51-00-01	-082	01	S2031-1	53-20-03-02	-003	05
S1450-8S16-063L	52-10-22-01	-020	01	S2031-3	23-11-10-01	-003	06
S1450-8S16-063L	52-10-22-01	-092	01	S2031-3	23-15-45-01	-004	04
S1450-8S16-063L	52-10-22-01	-168	01	S2031-3	27-20-05-01	-011	02
S1450-8S16-063L	52-10-22-01	-242	01	S2031-3	34-53-00-01	-010	04
S1450-8S19-045	57-51-00-01	-027	01	S2031-3	34-57-00-01	-078	04
S1450-8S19-045	57-51-00-01	-037	01	S2034-1	23-13-00-01	-077	02
S1450-8S19-045	57-51-00-01	-110	01	S2034-1	31-30-00-01	-011	06
S147-1	52-40-19-01	-012	02	S2034-1	38-32-05-01	-002	01
S1477-08	25-50-00-01	-242	04	S2034-1	57-10-02-06	-007	01
S1477-3	21-50-10-01	-042	16	S2041-100B0.33	33-40-35-02	-027	01
S1477-3	34-10-00-02	-236	01	S2041-100B0.33	33-40-35-02	-028	01
S1477-3	34-10-00-02	-241	01	S2049-5FG	52-10-22-02	-008	01
S1527-16	56-13-00-01	-012	11	S2092-12	25-50-00-01	-179	AR
S1721-16	35-10-20-01	-024	01	S2108-8	52-10-31-01	-111	AR
S1721-66	35-10-20-01	-096	01	S2202-5	57-80-00-01	-024	02
S1722-10	35-10-20-01	-026	02	S2209-1	21-31-00-01	-008	AR
S1722-74	35-10-20-01	-095	01	S2209-1	27-80-10-01	-044	01
S1741-1	23-15-00-01	-104	02	S2209-1	36-15-00-02	-122	04
S1741-1	28-11-10-01	-169	01	S2209-1	38-32-05-01	-003	04
S1741-1	33-40-35-02	-033	02	S2209-1	38-32-10-01	-006	AR
S1741-1	36-15-00-02	-121	04	S2209-1	57-60-00-01	-084	04
S1741-1	52-30-00-01	-017	21	S2226-1	29-10-80-01	-163	02

© Cessna Aircraft Company

PART NUMBER	CH SEC SUBJ FIG	ITEM	REQ
S2226-1	29-10-80-01	-166	02
S2226-1	29-10-80-01	-170	03
S2231-2	28-21-00-01	-076	01
S2258-10-3.00	21-25-20-01	-028	02
S2258-3-3.00	21-25-20-01	-022	04
S2258-4	38-30-15-01	-011	02
S2258-5-3.00	21-25-20-01	-004	04
S2258-7-3.00	21-25-20-01	-043	03
S2258-7-4.00	21-25-20-01	-043A	03
S2272-2	52-30-40-01	-009	AR
S2295P35-31	27-10-30-01	-386	01
S2295P35-39	27-10-30-01	-017	01
S2300-39	36-15-00-02	-050	03
S2300-39	36-15-00-02	-178	02
S2319-118S	71-10-00-01	-011	61
S2319-20	52-40-23-01	-004	02
S2319-22	21-50-10-01	-028	04
S2319-30	21-50-10-01	-031	04
S2319-50	52-40-23-01	-003	02
S2319-50	53-30-02-03	-075	14
S2319-50	53-30-02-03	-084	17
S2319-50	53-30-02-03	-090	08
S2319-50	53-30-02-03	-154	11
S2319-50	53-30-02-03	-159	11
S2319-50	53-30-02-03	-165	04
S2319-50	53-30-03-05	-005	22
S2319-50	71-10-00-01	-012	61
S2319-50	78-30-00-01	-003	22
S2319-51	53-30-02-03	-085	07
S2319-51	53-30-02-03	-160	05
S2319-51	53-30-02-03	-166	03
S2319-64	53-30-02-03	-082	31
S2319-64	53-30-02-03	-088	08
S2319-64	53-30-02-03	-152	18
S2319-64	53-30-02-03	-157	16
S2319-64	53-30-02-03	-163	07
S2319-64	53-30-03-05	-006	22
S2323-1	29-10-80-01	-152	01
S2323-14	32-33-00-01	-007	01
S2357-1	21-50-20-01	-003	03
S2357-1	36-15-00-01	-027	04
S2357-1	36-15-00-02	-117	01
S2357-1	52-11-00-01	-010	02
S2357-1	52-11-00-01	-028	AR
S2357-1	52-11-20-01	-011	10
S2357-3	38-32-05-01	-004	01
S2387-1	27-10-50-01	-310	01
S2446-8	35-10-00-01	-021	02
S2536-38	38-32-05-01	-005	01
S2545C3	34-15-05-01	-002	01
S2548-4-10.00	52-11-00-01	-009	01
S2548-4-27.00	52-11-00-01	-030	01
S2609-3	24-60-10-01	-307	01
S2609-3	24-60-10-02	-307	01
S2609-3	24-60-15-01	-027	01
S261-1130-00	23-70-00-01	-014	01
S2614-3-30	27-11-00-01	-160	02
S2614-3-31	27-11-00-01	-166	01
S2614-3-32	27-11-00-01	-167	01
S2614-3-33	27-11-00-01	-178	01
S2614-3-33	27-11-00-01	-228	01
S2614-3-34	27-10-30-01	-302	01
S2614-3-7	30-10-30-01	-006	02
S2614-4-15	27-11-00-01	-253	02
S2666-1	24-60-05-01	-008	03
S2666-1	24-60-05-01	-026	08
S2666-1	24-60-05-02	-008	03
S2666-1	24-60-05-02	-026	08
S2674-1	57-40-10-01	-268	01
S2677-10D	28-20-00-03	-152	08
S2677-10D	28-20-20-01	-007	04
S2677-10D	28-20-21-01	-099	04
S2677-16D	28-11-20-01	-009	AR
S2677-16D	28-11-20-01	-077	AR
S2677-16D	28-20-00-03	-010	02
S2677-16D	28-20-00-03	-027	04
S2677-16D	28-20-00-03	-159	12
S2677-16D	28-21-00-02	-098	02
S2677-16D	28-21-00-02	-165	02
S2677-16D	30-10-20-01	-078	02
S2677-20D	28-11-10-01	-011	AR
S2677-20D	28-11-10-01	-090	AR
S2677-20D	28-20-00-03	-007	02
S2677-20D	28-20-20-01	-009	04
S2677-20D	28-21-00-02	-167	04
S2677-20D	28-21-00-02	-171	01
S2677-20D	28-21-00-03	-021	08
S2677-24D	28-21-00-02	-194	02
S2677-24D	28-21-00-02	-209	01
S2677-24D	30-10-30-01	-013	01
S2677-32D	28-21-00-01	-092	02
S2677-32D	28-21-00-02	-169	02
S2677-32D	28-21-00-02	-231	03
S2680-16D	28-20-05-01	-025	02
S2680-16D	28-21-00-02	-100	02
S2680-20D	28-21-00-02	-173	01
S2682-10D	28-20-00-03	-154	02
S2682-10D	28-20-21-01	-075	06
S2682-16D	28-11-20-01	-017	02
S2682-16D	28-11-20-01	-105	02
S2682-16D	28-20-00-02	-010	02
S2682-16D	28-20-00-03	-012	01
S2682-16D	28-20-00-03	-164	03
S2682-20D	28-11-10-01	-077	02
S2682-24D	28-11-20-01	-186	02
S2682-32D	28-11-20-01	-150	02
S2682-32D	28-21-00-01	-094	01
S2693-10N	29-21-00-01	-028	01
S2693-4N	27-80-00-01	-005	04
S2693-4N	29-10-09-01	-233	01
S2693-4N	29-23-00-01	-003	01
S2693-4N	29-23-00-01	-005	01
S2693-4N	29-23-00-01	-021	02
S2693-4N	29-23-00-01	-023	02
S2693-4N	29-23-00-01	-093	02
S2716-4B13.0	21-25-75-01	-017	01
S2800-1118	23-50-25-01	-009	01
S2800-1118	23-50-25-01	-010	01
S2800-1118	23-50-25-01	-011	01
S2800-1118	23-50-25-01	-012	01
S2800-1138	23-50-25-01	-001	01
S2800-1138	23-50-25-01	-002	01
S2800-1138	23-50-25-01	-003	01
S2800-1138	23-50-25-01	-004	01

© Cessna Aircraft Company

PART NUMBER	CH SEC SUBJ FIG	ITEM	REQ	PART NUMBER	CH SEC SUBJ FIG	ITEM	REQ
S2800-1138	23-50-25-01	-005	01	S2899-5.0	24-60-10-01	-103	01
S2800-1138	23-50-25-01	-006	01	S2899-5.0	24-60-10-01	-105	01
S2800-1254	27-50-20-01	-015	01	S2899-5.0	24-60-10-01	-106	01
S2800-234	27-10-15-01	-239	01	S2899-5.0	24-60-10-01	-107	01
S2800-442	27-33-00-01	-178	02	S2899-5.0	24-60-10-01	-109	01
S2800-559	53-10-10-01	-075	04	S2899-5.0	24-60-10-01	-110	01
S2800-902	35-10-20-01	-029	01	S2899-5.0	24-60-10-01	-111	01
S2800-902	35-10-20-01	-166	01	S2899-5.0	24-60-10-01	-150	01
S2807-1	11-N-23-02	-003	01	S2899-5.0	24-60-10-01	-162	01
S2876-1BB5	26-20-05-01	-004	02	S2899-5.0	24-60-10-01	-163	01
S2876-1BB5	33-50-00-01	-003	01	S2899-5.0	24-60-10-01	-164	01
S2878-3	52-10-11-01	-082	01	S2899-5.0	24-60-10-01	-165	01
S2887-24	30-20-00-02	-005	02	S2899-5.0	24-60-10-01	-166	01
S2887-40	80-10-00-01	-090	02	S2899-5.0	24-60-10-01	-173	01
S2893-10	53-10-10-01	-041	01	S2899-5.0	24-60-10-02	-078	01
S2893-10	53-10-10-01	-050	01	S2899-5.0	24-60-10-02	-079	01
S2893-12	53-10-10-01	-015	01	S2899-5.0	24-60-10-02	-080	01
S2893-14	53-10-10-01	-059	01	S2899-5.0	24-60-10-02	-085	01
S2895-2	53-10-10-01	-022	03	S2899-5.0	24-60-10-02	-086	01
S2895-2	53-10-10-01	-030	01	S2899-5.0	24-60-10-02	-088	01
S2899-1.0	24-60-10-01	-153	01	S2899-5.0	24-60-10-02	-089	01
S2899-1.0	24-60-10-01	-160	01	S2899-5.0	24-60-10-02	-093	01
S2899-1.0	24-60-10-01	-161	01	S2899-5.0	24-60-10-02	-094	01
S2899-1.0	24-60-10-01	-172	01	S2899-5.0	24-60-10-02	-101	01
S2899-1.0	24-60-10-02	-153	01	S2899-5.0	24-60-10-02	-104	01
S2899-1.0	24-60-10-02	-160	01	S2899-5.0	24-60-10-02	-106	01
S2899-1.0	24-60-10-02	-172	01	S2899-5.0	24-60-10-02	-107	01
S2899-1.0	24-60-15-01	-176	01	S2899-5.0	24-60-10-02	-108	01
S2899-1.0	24-60-15-01	-245	01	S2899-5.0	24-60-10-02	-109	01
S2899-1.0	24-60-15-01	-248	01	S2899-5.0	24-60-10-02	-111	01
S2899-10.0	24-60-10-02	-105	01	S2899-5.0	24-60-10-02	-150	01
S2899-10.0	24-60-10-02	-167	01	S2899-5.0	24-60-10-02	-162	01
S2899-10.0	24-60-15-01	-163	01	S2899-5.0	24-60-10-02	-163	01
S2899-10.0	24-60-15-01	-235	01	S2899-5.0	24-60-10-02	-164	01
S2899-15.0	24-60-10-02	-083	01	S2899-5.0	24-60-10-02	-166	01
S2899-15.0	24-60-15-01	-164	01	S2899-5.0	24-60-10-02	-169	01
S2899-15.0	24-60-15-01	-165	01	S2899-5.0	24-60-10-02	-173	01
S2899-2.0	24-60-10-01	-091	01	S2899-5.0	24-60-15-01	-156	01
S2899-2.0	24-60-10-01	-168	01	S2899-5.0	24-60-15-01	-157	01
S2899-2.0	24-60-10-02	-091	01	S2899-5.0	24-60-15-01	-167	01
S2899-20.0	24-60-10-01	-077	01	S2899-5.0	24-60-15-01	-168	01
S2899-20.0	24-60-10-02	-077	01	S2899-5.0	24-60-15-01	-169	01
S2899-20.0	24-60-15-01	-173	01	S2899-5.0	24-60-15-01	-171	01
S2899-3.0	24-60-10-01	-082	01	S2899-5.0	24-60-15-01	-174	01
S2899-3.0	24-60-10-01	-088	01	S2899-5.0	24-60-15-01	-177	01
S2899-3.0	24-60-10-01	-112	01	S2899-5.0	24-60-15-01	-229	01
S2899-3.0	24-60-10-02	-082	01	S2899-5.0	24-60-15-01	-236	01
S2899-3.0	24-60-10-02	-084	01	S2899-5.0	24-60-15-01	-239	01
S2899-3.0	24-60-10-02	-102	01	S2899-5.0	24-60-15-01	-240	01
S2899-3.0	24-60-10-02	-112	01	S2899-5.0	24-60-15-01	-241	01
S2899-3.0	24-60-15-01	-161	01	S2899-5.0	24-60-15-01	-243	01
S2899-3.0	24-60-15-01	-170	01	S2899-5.0	24-60-15-01	-246	01
S2899-3.0	24-60-15-01	-233	01	S2899-5.0	24-60-15-01	-247	01
S2899-5.0	24-40-05-01	-003	01	S2899-5.0	24-60-15-01	-249	01
S2899-5.0	24-60-10-01	-078	01	S2899-7.5	24-60-10-01	-108	01
S2899-5.0	24-60-10-01	-079	01	S2899-7.5	24-60-10-02	-087	01
S2899-5.0	24-60-10-01	-080	01	S2899-7.5	24-60-10-02	-165	01
S2899-5.0	24-60-10-01	-083	01	S2899-7.5	24-60-10-02	-168	01
S2899-5.0	24-60-10-01	-085	01	S2899-7.5	24-60-15-01	-155	01
S2899-5.0	24-60-10-01	-089	01	S2899-7.5	24-60-15-01	-158	01
S2899-5.0	24-60-10-01	-101	01	S2899-7.5	24-60-15-01	-159	01
S2899-5.0	24-60-10-01	-102	01	S2899-7.5	24-60-15-01	-227	01

© Cessna Aircraft Company

PART NUMBER	CH SEC SUBJ FIG	ITEM	REQ	PART NUMBER	CH SEC SUBJ FIG	ITEM	REQ
S2899-7.5	24-60-15-01	-230	01	S2899L5.0	24-60-05-03	-077	01
S2899-7.5	24-60-15-01	-231	01	S2899L5.0	24-60-05-03	-079	01
S2899L0.5	24-60-05-03	-006	01	S2899L5.0	24-60-05-03	-080	01
S2899L0.5	24-60-05-03	-025	01	S2899L5.0	24-60-05-03	-088	01
S2899L0.5	24-60-05-03	-089	01	S2899L5.0	24-60-05-03	-093	01
S2899L0.5	24-60-05-04	-005	01	S2899L5.0	24-60-05-03	-095	01
S2899L0.5	24-60-05-04	-006	01	S2899L5.0	24-60-05-03	-098	01
S2899L0.5	24-60-05-04	-024	01	S2899L5.0	24-60-05-03	-099	01
S2899L1.0	24-60-05-03	-075	01	S2899L5.0	24-60-05-03	-102	01
S2899L1.0	24-60-05-03	-105	01	S2899L5.0	24-60-05-03	-106	01
S2899L10.0	24-60-05-03	-096	01	S2899L5.0	24-60-05-03	-108	01
S2899L10.0	24-60-05-03	-097	01	S2899L5.0	24-60-05-03	-109	01
S2899L10.0	24-60-05-03	-100	01	S2899L5.0	24-60-05-04	-002	01
S2899L10.0	24-60-05-03	-101	01	S2899L5.0	24-60-05-04	-003	01
S2899L10.0	24-60-05-04	-022	01	S2899L5.0	24-60-05-04	-004	01
S2899L10.0	24-60-05-04	-076	01	S2899L5.0	24-60-05-04	-008	01
S2899L10.0	24-60-05-04	-100	01	S2899L5.0	24-60-05-04	-010	01
S2899L10.0	24-60-05-04	-101	01	S2899L5.0	24-60-05-04	-013	01
S2899L10.0	24-60-05-04	-102	01	S2899L5.0	24-60-05-04	-014	01
S2899L10.0	24-60-05-04	-103	01	S2899L5.0	24-60-05-04	-016	01
S2899L15.0	24-60-05-03	-004	01	S2899L5.0	24-60-05-04	-017	01
S2899L15.0	24-60-05-03	-007	01	S2899L5.0	24-60-05-04	-018	01
S2899L15.0	24-60-05-03	-015	01	S2899L5.0	24-60-05-04	-019	01
S2899L15.0	24-60-05-04	-001	01	S2899L5.0	24-60-05-04	-020	01
S2899L15.0	24-60-05-04	-007	01	S2899L5.0	24-60-05-04	-021	01
S2899L15.0	24-60-05-04	-015	01	S2899L5.0	24-60-05-04	-023	01
S2899L15.0	24-60-05-04	-032	01	S2899L5.0	24-60-05-04	-025	01
S2899L3.0	24-60-05-03	-009	01	S2899L5.0	24-60-05-04	-026	01
S2899L3.0	24-60-05-03	-078	01	S2899L5.0	24-60-05-04	-027	01
S2899L3.0	24-60-05-03	-087	01	S2899L5.0	24-60-05-04	-029	01
S2899L3.0	24-60-05-03	-094	01	S2899L5.0	24-60-05-04	-031	01
S2899L3.0	24-60-05-03	-110	01	S2899L5.0	24-60-05-04	-033	01
S2899L3.0	24-60-05-04	-009	01	S2899L5.0	24-60-05-04	-075	01
S2899L3.0	24-60-05-04	-082	01	S2899L5.0	24-60-05-04	-077	01
S2899L3.0	24-60-05-04	-086	01	S2899L5.0	24-60-05-04	-078	01
S2899L3.0	24-60-05-04	-087	01	S2899L5.0	24-60-05-04	-079	01
S2899L3.0	24-60-05-04	-094	01	S2899L5.0	24-60-05-04	-084	01
S2899L5.0	24-60-05-03	-001	01	S2899L5.0	24-60-05-04	-085	01
S2899L5.0	24-60-05-03	-002	01	S2899L5.0	24-60-05-04	-088	01
S2899L5.0	24-60-05-03	-003	01	S2899L5.0	24-60-05-04	-089	01
S2899L5.0	24-60-05-03	-005	01	S2899L5.0	24-60-05-04	-093	01
S2899L5.0	24-60-05-03	-008	01	S2899L5.0	24-60-05-04	-095	01
S2899L5.0	24-60-05-03	-010	01	S2899L5.0	24-60-05-04	-096	01
S2899L5.0	24-60-05-03	-013	01	S2899L5.0	24-60-05-04	-097	01
S2899L5.0	24-60-05-03	-014	01	S2899L5.0	24-60-05-04	-098	01
S2899L5.0	24-60-05-03	-016	01	S2899L5.0	24-60-05-04	-099	01
S2899L5.0	24-60-05-03	-017	01	S2899L5.0	24-60-05-04	-104	01
S2899L5.0	24-60-05-03	-018	01	S2899L5.0	24-60-05-04	-105	01
S2899L5.0	24-60-05-03	-019	01	S2899L5.0	24-60-05-04	-106	01
S2899L5.0	24-60-05-03	-020	01	S2899L5.0	24-60-05-04	-109	01
S2899L5.0	24-60-05-03	-021	01	S2899L7.5	24-60-05-03	-011	01
S2899L5.0	24-60-05-03	-022	01	S2899L7.5	24-60-05-03	-012	01
S2899L5.0	24-60-05-03	-023	01	S2899L7.5	24-60-05-04	-011	01
S2899L5.0	24-60-05-03	-024	01	S2899L7.5	24-60-05-04	-012	01
S2899L5.0	24-60-05-03	-027	01	S2899L7.5	24-60-05-04	-110	01
S2899L5.0	24-60-05-03	-028	01	S2903L3	57-20-01-03	-021	06
S2899L5.0	24-60-05-03	-029	01	S2905-1	52-40-07-01	-011	01
S2899L5.0	24-60-05-03	-030	01	S2905-1	52-40-15-01	-007	02
S2899L5.0	24-60-05-03	-031	01	S2905-1	53-43-00-01	-022	01
S2899L5.0	24-60-05-03	-032	01	S2909J08	36-15-00-02	-013	02
S2899L5.0	24-60-05-03	-033	01	S2909J08	36-15-00-03	-003	02
S2899L5.0	24-60-05-03	-076	01	S2909J08	36-15-00-03	-027	04

© Cessna Aircraft Company

PART NUMBER	CH SEC SUBJ FIG	ITEM	REQ
S2909J08	36-15-00-03	-035	06
S2909J08	36-15-00-03	-078	04
S2909J08	36-15-00-03	-087	04
S2909J08	36-15-00-03	-093	06
S2909W08	29-10-00-01	-075	03
S2909W08	29-10-00-01	-084	02
S2909W08	29-10-00-02	-082	02
S2909W08	29-10-00-02	-097	03
S2909W08	29-10-00-04	-026	01
S2909W08	29-10-00-04	-037	02
S2909W08	29-10-00-04	-094	01
S2909W08	29-10-00-04	-229	01
S2909W08	29-10-00-04	-242	01
S2909W08	29-10-00-04	-245	01
S2909W08	29-10-00-05	-015	02
S2909W08	29-10-00-05	-089	02
S2909W08	29-10-00-06	-014	05
S2909W08	29-10-00-06	-157	01
S2909W12	29-10-00-01	-152	01
S2909W12	29-10-00-02	-029	01
S2909W12	29-10-00-04	-087	01
S2909W12	29-10-00-04	-233	01
S2909W12	29-10-00-04	-239	01
S2909W12	29-10-00-06	-087	03
S2910-04	27-80-00-03	-023	04
S2910-04	27-80-00-03	-082	12
S2910-04	29-10-00-04	-251	01
S2910-04	29-10-00-09	-007	02
S2910-04	29-10-00-09	-033	02
S2910-04	29-10-00-11	-040	08
S2910-04	29-10-00-12	-169	08
S2910-04	29-23-00-01	-323	01
S2910-04	29-23-05-01	-013	01
S2910-04	32-43-00-02	-268	12
S2910-04	32-47-00-01	-015	01
S2910-04	32-47-00-01	-018	01
S2910-04	32-47-00-01	-021	01
S2910-04	32-47-00-01	-024	01
S2910-04	32-49-00-03	-110	08
S2910-04	32-51-00-01	-089	02
S2910-04	32-51-00-01	-099	01
S2910-04	32-51-00-01	-107	03
S2910-04	32-51-05-01	-083	02
S2910-04	32-51-05-01	-088	01
S2910-04	32-51-05-01	-108	02
S2910-04	78-30-10-02	-005	01
S2910-06	29-10-00-10	-007	02
S2910-06	29-10-00-10	-183	02
S2910-06	32-30-00-02	-078	02
S2910-06	32-30-00-02	-184	02
S2910-06	32-30-00-03	-009	08
S2910-08	36-15-00-02	-017	02
S2910-08	36-15-00-03	-004	02
S2910-08	36-15-00-03	-028	04
S2910-08	36-15-00-03	-034	06
S2910-08	36-15-00-03	-077	04
S2910-08	36-15-00-03	-086	04
S2910-08	36-15-00-03	-094	06
S2910D06	29-10-00-06	-174	01
S2910D06	32-47-00-01	-010	06
S2910D08	29-10-00-01	-076	03
S2910D08	29-10-00-01	-083	02
S2910D08	29-10-00-02	-081	02
S2910D08	29-10-00-02	-096	03
S2910D08	29-10-00-04	-027	01
S2910D08	29-10-00-04	-038	02
S2910D08	29-10-00-04	-095	01
S2910D08	29-10-00-04	-230	01
S2910D08	29-10-00-04	-243	01
S2910D08	29-10-00-04	-246	01
S2910D08	29-10-00-05	-014	02
S2910D08	29-10-00-06	-013	05
S2910D08	29-10-00-06	-156	01
S2910D10	29-10-00-01	-036	01
S2910D10	29-10-00-02	-076	01
S2910D10	29-10-00-06	-028	01
S2910D10	29-10-00-06	-165	01
S2910D12	29-10-00-01	-153	01
S2910D12	29-10-00-02	-030	01
S2910D12	29-10-00-04	-086	01
S2910D12	29-10-00-04	-234	01
S2910D12	29-10-00-04	-240	01
S2910D12	29-10-00-06	-086	03
S2911D06	29-10-00-04	-150	01
S2911D06	29-10-00-04	-159	01
S2911D06	29-10-00-05	-002	01
S2911D06	29-10-00-05	-077	01
S2911D06	29-10-00-05	-321	01
S2911D06	29-10-00-06	-173	01
S2911D06	29-10-00-07	-081	01
S2911D06	78-30-10-01	-094	01
S2911D06	78-30-10-02	-011	01
S2911D06	78-30-10-02	-017	01
S2911D08	29-10-00-04	-025	01
S2911D08	29-10-00-04	-093	01
S2911D08	29-10-00-06	-012	01
S2911D08	29-10-00-06	-155	01
S2911D10	29-10-00-06	-164	01
S2912-06	36-15-00-02	-016	09
S2912-06	36-15-00-02	-155	01
S2912-06	36-15-00-03	-006	04
S2914-04	29-23-00-01	-178	01
S2915-04	27-80-00-01	-078	02
S2915-04	29-10-00-06	-178	01
S2915-04	29-10-00-07	-162	01
S2915-04	29-10-00-09	-034	01
S2915-04	32-33-00-01	-032	02
S2915-04	32-33-00-01	-105	02
S2915-04	32-33-00-01	-154	01
S2915-04	32-43-00-02	-154	01
S2915-04	32-43-00-02	-228	04
S2915-04	32-49-00-01	-017	01
S2915-04	32-49-00-02	-002	03
S2915-04	32-49-00-03	-001	01
S2915-04	32-49-00-03	-075	02
S2915-04	32-49-00-03	-114	02
S2915-04	32-51-00-01	-088	01
S2915-04	32-51-00-01	-106	01
S2915-04	32-51-05-01	-090	01
S2915-04	32-51-05-01	-110	04
S2915-06	29-10-00-04	-316	01
S2915-06	29-10-00-06	-021	01
S2915-06	32-30-00-02	-183	02
S2915-06	32-30-00-03	-010	02

© Cessna Aircraft Company

PART NUMBER	CH SEC SUBJ FIG	ITEM	REQ	PART NUMBER	CH SEC SUBJ FIG	ITEM	REQ
S2915-08	29-10-00-05	-156	02	S2922-06	29-10-00-10	-088	02
S2915-08	29-10-00-05	-166	02	S2922-06	29-10-00-10	-164	01
S2915-10	29-10-00-01	-007	01	S2922-06	29-10-00-10	-194	01
S2915-10	29-10-00-06	-085	01	S2922-06	29-10-00-12	-033	08
S2915-10	29-10-80-01	-088	02	S2922-06	29-10-00-12	-102	02
S2915D06	29-10-00-05	-009	01	S2922-06	32-30-00-02	-018	AR
S2915D06	29-10-00-05	-083	01	S2922-06	32-30-00-03	-029	04
S2915D06	29-10-00-06	-172	01	S2922-06	32-30-00-03	-081	04
S2915D06	29-10-00-09	-016	01	S2922D06	29-10-00-07	-079	01
S2915D06	29-10-00-09	-026	01	S2922D06	29-10-00-09	-083	01
S2915D08	29-10-00-01	-077	01	S2922D06	29-10-00-09	-087	01
S2915D08	29-10-00-01	-085	01	S2922D10	29-10-00-01	-037	01
S2915D08	29-10-00-01	-087	01	S2927-060404	29-10-00-12	-164	02
S2915D08	29-10-00-02	-086	01	S2932D12	29-10-00-06	-084	03
S2915D08	29-10-00-02	-093	01	S2934-04	29-10-00-07	-018	01
S2915D08	29-10-00-02	-095	01	S2934-04	29-10-00-11	-041	02
S2915D08	29-10-00-04	-096	01	S2934-04	78-30-10-02	-007	01
S2915D08	29-10-00-06	-158	01	S2934-06	29-10-00-06	-010	01
S2915D10	29-10-00-05	-160	02	S2934-06	32-30-00-02	-153	02
S2915D12	29-10-00-01	-150	01	S2934-10	29-10-00-01	-009	01
S2915D12	29-10-00-02	-100	01	S2934-10	29-10-00-02	-006	01
S2915D12	29-10-00-04	-110	02	S2934-10	29-10-00-04	-170	02
S2915D12	29-10-00-06	-083	01	S2934D06	29-10-00-05	-076	01
S2915D12	29-10-80-01	-015	01	S2934D08	29-10-00-04	-047	01
S2915D12	29-10-80-01	-081	02	S2934D08	29-10-00-06	-009	02
S2915D16	29-10-00-01	-024	01	S2934D10	29-10-00-02	-078	01
S2915D16	29-10-00-02	-021	01	S2934D10	29-10-00-06	-029	01
S2916-060406	29-10-00-10	-170	01	S2934D10	29-10-00-06	-167	01
S2917-04	27-80-00-02	-151	04	S2938-04	29-10-00-10	-028	01
S2917-04	27-80-00-02	-174	04	S2938-04	29-10-00-10	-171	01
S2917-04	29-10-00-12	-163	02	S2938-06	29-10-00-10	-027	01
S2917-04	32-49-00-03	-109	02	S2939D10	29-10-00-06	-163	01
S2918D04	49-10-20-01	-009	01	S2939D12	29-10-80-01	-017	01
S2922-04	27-80-00-01	-087	16	S2940-04	27-80-00-03	-024	04
S2922-04	27-80-00-02	-012	08	S2940-04	27-80-00-03	-083	12
S2922-04	27-80-00-02	-086	08	S2940-04	29-10-00-04	-250	01
S2922-04	27-80-00-02	-150	04	S2940-04	29-10-00-09	-006	02
S2922-04	27-80-00-02	-173	04	S2940-04	29-10-00-09	-032	02
S2922-04	29-10-00-07	-003	06	S2940-04	29-10-00-11	-039	08
S2922-04	29-10-00-09	-090	02	S2940-04	29-10-00-12	-170	08
S2922-04	29-10-00-09	-097	AR	S2940-04	29-23-00-01	-324	01
S2922-04	29-10-00-10	-041	02	S2940-04	29-23-05-01	-014	01
S2922-04	29-10-00-10	-087	06	S2940-04	32-43-00-02	-269	12
S2922-04	29-10-00-10	-163	01	S2940-04	32-47-00-01	-014	01
S2922-04	29-10-00-12	-032	06	S2940-04	32-47-00-01	-017	01
S2922-04	29-10-00-12	-101	06	S2940-04	32-47-00-01	-020	01
S2922-04	29-10-00-12	-154	04	S2940-04	32-47-00-01	-023	01
S2922-04	29-10-00-12	-229	04	S2940-04	32-49-00-03	-111	08
S2922-04	29-10-00-12	-310	04	S2940-04	32-51-00-01	-090	02
S2922-04	32-30-00-02	-007	01	S2940-04	32-51-00-01	-100	01
S2922-04	32-33-00-01	-153	02	S2940-04	32-51-00-01	-108	03
S2922-04	32-33-00-01	-230	04	S2940-04	32-51-05-01	-084	02
S2922-04	32-33-00-01	-302	02	S2940-04	32-51-05-01	-089	01
S2922-04	32-43-00-02	-007	06	S2940-04	32-51-05-01	-109	02
S2922-04	32-43-00-02	-077	04	S2940-04	78-30-10-02	-006	01
S2922-04	32-49-00-02	-004	03	S2940-06	29-10-00-10	-008	02
S2922-04	32-49-00-02	-077	05	S2940-06	29-10-00-10	-184	02
S2922-04	32-51-00-01	-098	01	S2940-06	32-30-00-02	-077	02
S2922-04	32-51-05-01	-085	01	S2940-06	32-30-00-02	-185	02
S2922-06	29-10-00-09	-076	01	S2940-06	32-30-00-03	-011	08
S2922-06	29-10-00-09	-088	01	S2940-06	36-15-00-02	-012	09
S2922-06	29-10-00-10	-013	01	S2940-06	36-15-00-02	-154	01

© Cessna Aircraft Company

PART NUMBER	CH SEC SUBJ FIG	ITEM	REQ	PART NUMBER	CH SEC SUBJ FIG	ITEM	REQ
S2940-06	36-15-00-03	-007	04	S3049-6F8	57-51-00-01	-154	01
S2940D06	29-10-00-01	-166	02	S3049-7F8	57-51-00-01	-080	01
S2940D06	29-10-00-02	-169	02	S3049-7F8	57-51-00-01	-153	01
S2940D06	29-10-00-04	-079	01	S3049-8F8	57-51-00-01	-004	02
S2940D06	29-10-00-04	-151	01	S3049-8F8	57-51-00-01	-078	01
S2940D06	29-10-00-05	-004	01	S3050-1	28-11-10-01	-155	02
S2940D06	29-10-00-05	-011	01	S3050-1	28-20-05-01	-034	02
S2940D06	29-10-00-05	-085	01	S3050-3	28-20-00-02	-080	02
S2940D06	29-10-00-05	-317	01	S3050-3	34-10-00-02	-105	01
S2940D06	29-10-00-06	-175	01	S3050-4	32-50-25-01	-006	01
S2940D06	29-10-00-07	-076	02	S3050-4	32-51-25-01	-006	01
S2940D06	29-10-00-07	-154	02	S3060-3H	32-30-00-01	-085	02
S2940D06	29-10-00-09	-014	01	S307-5	21-25-20-01	-092	AR
S2940D06	29-10-00-09	-024	01	S3071-04C13	52-10-11-01	-252	01
S2940D06	32-47-00-01	-011	06	S3071-06C15	27-11-00-01	-239	01
S2940D06	78-30-10-01	-096	03	S3071-06C15	57-70-00-01	-004	02
S2940D06	78-30-10-02	-009	01	S3071-06C15	57-70-00-01	-016	02
S2940D06	78-30-10-02	-015	01	S3071-06C15	57-70-00-01	-029	02
S2940D06	78-30-10-02	-019	01	S3071-06C24	32-31-05-01	-029	01
S2940D06	78-30-10-02	-096	02	S3100-447	23-13-00-01	-009	01
S2940D10	29-10-00-01	-035	01	S3100-447	23-13-00-01	-010	01
S2940D10	29-10-00-02	-077	01	S3100-449	23-13-00-01	-001	01
S2940D10	29-10-00-06	-027	01	S3100-449	23-13-00-01	-002	01
S2940D10	29-10-00-06	-166	01	S3100-489	34-59-00-01	-001A	01
S2941-1-9.00	54-50-00-01	-046	01	S3100-589	34-60-00-01	-075	01
S2941-2	54-50-00-01	-057	AR	S3100-589	34-60-00-01	-076	01
S2941-2	54-50-00-01	-196	AR	S3100-589	34-60-00-01	-088	01
S2941-2	54-50-00-01	-206	AR	S3100-589	34-60-00-01	-089	01
S2951-13	27-11-00-01	-020	01	S3100-604	34-20-00-01	-001A	01
S2951-20	21-50-10-01	-048	04	S3100-604	34-20-00-01	-002A	01
S2951-38	52-10-21-01	-010	01	S3100-611	34-60-00-01	-001A	01
S2951-40	52-10-11-01	-014	01	S3100-611	34-60-00-01	-002A	01
S2952-10	32-43-00-01	-040	04	S3100-611	34-60-00-01	-003A	01
S2952-11	52-10-21-01	-087	01	S3100-627	31-30-00-01	-001A	01
S2952-12	52-10-03-01	-023	01	S3100-628	23-70-00-01	-007A	01
S2952-14	52-10-21-01	-158	01	S3128A0133-000E	27-80-00-03	-030	01
S2952-15	52-10-11-01	-262	01	S3128A0133-000E	27-80-00-03	-031	01
S2952-16	52-10-11-01	-257	02	S3128A0155-000E	29-10-00-11	-021	01
S2952-17	52-10-11-01	-240	01	S3128A0184-000E	27-80-00-03	-028	01
S2952-22	52-10-11-01	-170	01	S3128A0184-000E	27-80-00-03	-029	01
S2952-23	21-50-10-01	-020	02	S3128C0114-000E	29-10-00-11	-003	01
S2952-25	32-30-00-01	-009	02	S3128C0116-000E	29-10-00-11	-176	01
S2952-28	52-10-03-01	-159	01	S3128E0153-315E	29-10-00-11	-159	01
S2952-34	27-36-00-01	-012	02	S3128E0156-246E	29-10-00-11	-019	01
S2952-35	27-10-50-01	-033	02	S3128E0235-332E	29-10-00-11	-002	01
S2952-36	27-10-50-01	-258	02	S3134-13	53-20-02-04	-006	02
S2952-4	28-21-00-01	-089	01	S3134-13	56-10-00-01	-002	02
S2952-7	32-43-00-01	-165	02	S3134-33	27-13-00-01	-157	02
S2952-8	21-50-10-01	-002	04	S3134-35	27-10-15-01	-171	01
S2952-9	52-10-11-01	-085	01	S3134-35	27-60-20-01	-085	04
S2953-6	52-10-13-01	-006	01	S3134-47	27-30-05-01	-075	04
S2953-7	52-10-19-01	-003	01	S3134-47	27-60-20-01	-087	02
S2971-23CP1032	24-60-15-01	-015	04	S3134-49	27-10-15-01	-170	01
S2978-10CP0632	27-50-20-01	-042	03	S3134-65	27-10-15-01	-168	19
S2980-10AA1032	33-40-35-02	-011	04	S3134-65	27-60-20-01	-027	06
S3001-18	34-10-00-02	-243	01	S3134-65	27-60-20-01	-086	27
S3017-4-4-4	52-11-20-01	-010	01	S3134-65	27-60-20-01	-150	06
S3017-4-4-4	52-11-20-01	-013	01	S3134-67	27-10-15-01	-169	02
S3049-5F8	57-51-00-01	-079	01	S3134-67	27-60-20-01	-026	01
S3049-5F8	57-51-00-01	-152	02	S3134-7	53-20-02-01	-026	02
S3049-6F8	57-51-00-01	-003	02	S3137-15A	24-50-05-01	-007	01
S3049-6F8	57-51-00-01	-077	01	S3137-15A	24-50-05-01	-008	01

© Cessna Aircraft Company

PART NUMBER	CH SEC SUBJ FIG	ITEM	REQ
S3146-2	27-10-30-01	-300A	24
S3146A2	27-10-30-01	-300	24
S3148-1	57-40-10-01	-313	32
S3150A0066-000E	57-20-05-01	-039	02
S3150A0067-000E	57-20-05-02	-021	02
S3150A0086-000E	57-20-05-01	-030	02
S3150A0101-000E	57-20-05-02	-157	02
S3150A0114-000E	57-20-05-01	-008	02
S3150A0143-000E	57-20-05-02	-088	02
S3150B0072-000E	57-20-05-02	-008	02
S3150B0074-000E	57-20-05-01	-021	02
S3150E0107-180E	57-20-05-01	-083	02
S3150E0107-180E	57-20-05-02	-087	02
S3150F0114-180E	57-20-05-01	-096	02
S3154-25-40	24-60-10-01	-245	01
S3154-25-40	24-60-10-02	-244	01
S3176-1	32-61-00-01	-085	01
S3176-1	32-61-00-01	-086	01
S3177-1	32-61-00-01	-002	01
S3177-1	32-61-00-01	-075	01
S3177-1	32-61-00-01	-076	01
S3178-1	21-60-00-01	-007	01
S3178-1	45-45-00-01	-006	01
S3181E1	29-10-00-07	-014	02
S3181E1	32-49-00-02	-083	04
S3181E2	32-30-00-03	-036	04
S3181E3	29-10-00-07	-037	02
S3181E3	29-10-00-07	-082	05
S3181E3	29-10-00-07	-170	06
S3181E4	29-10-00-07	-038	02
S3181E4	29-10-00-07	-083	05
S3181E4	29-10-00-07	-171	04
S3181E5	32-30-00-02	-122	02
S3181E5	32-30-00-03	-085	02
S3181E5	32-33-00-01	-089	02
S3181E5	32-49-00-01	-075	02
S3181E6	32-30-00-02	-123	02
S3181E6	32-30-00-03	-086	02
S3181F1	27-80-00-01	-096	18
S3181F1	27-80-00-02	-021	12
S3181F1	27-80-00-02	-095	16
S3181F1	27-80-00-02	-183	12
S3181F1	27-80-00-03	-012	12
S3181F1	29-10-00-12	-036	06
S3181F1	29-10-00-12	-084	10
S3181F1	29-10-00-12	-151	08
S3181F1	29-10-00-12	-235	06
S3181F1	29-10-00-12	-308	12
S3181F1	32-33-00-01	-176	02
S3181F1	32-43-00-02	-200	04
S3181F1	32-49-00-02	-028	02
S3181F2	29-10-00-12	-037	02
S3181F2	29-10-00-12	-085	06
S3181F2	29-10-00-12	-152	08
S3181F2	29-10-00-12	-235A	02
S3182F1	29-10-00-10	-034	02
S3182F1	29-10-00-10	-083	03
S3182F1	29-10-00-10	-156	01
S3182F2	29-10-00-10	-162	01
S3183F1	29-10-00-10	-033	02
S3183F1	29-10-00-10	-082	03
S3183F1	29-10-00-10	-155	01

PART NUMBER	CH SEC SUBJ FIG	ITEM	REQ
S3183F2	29-10-00-10	-035	02
S3183F2	29-10-00-10	-084	03
S3183F2	29-10-00-10	-157	01
S3183F2	29-10-00-10	-161	02
S3184-1	29-10-00-10	-036	04
S3184-1	29-10-00-10	-085	06
S3184-1	29-10-00-10	-158	04
S3184-2	29-10-00-06	-046	02
S3184-6	29-10-00-08	-048	02
S3185E1	29-10-00-06	-044	01
S3186E1	29-10-00-06	-043	01
S3186E1	29-10-00-06	-045	01
S3189-35A	24-60-10-01	-171	01
S3189-35A	24-60-10-02	-170	01
S3189-35A	24-60-10-02	-171	01
S3189-35A	24-60-15-01	-237	01
S3190-1	35-10-20-01	-028	02
S3190-1	35-10-20-01	-090	01
S3190-1	35-10-20-01	-158	02
S3191-08	27-10-15-01	-091A	04
S3191-08	27-10-50-02	-005	10
S3191-08	27-10-50-02	-009	03
S3191-08	27-10-50-02	-015	05
S3191-08	27-10-50-02	-024	08
S3191-08	27-10-50-02	-100	17
S3191-08	27-10-50-02	-105	03
S3191-08	27-10-50-02	-110	04
S3191-08	27-10-50-02	-153	14
S3191-08	27-10-50-02	-168	04
S3191-08	27-10-50-02	-183	03
S3191-08	52-10-00-01	-015	04
S3191-08	52-10-00-01	-029	52
S3191-08	52-10-11-01	-188	06
S3191-08	52-10-22-02	-270	04
S3191-08	53-12-00-02	-024	21
S3191-08	53-15-00-01	-007A	02
S3191-08	53-15-00-02	-008A	06
S3191-08	53-15-00-02	-155A	06
S3191-08	53-20-00-04	-025A	12
S3191-08	53-20-00-04	-033A	12
S3191-08	53-20-00-05	-024A	12
S3191-08	53-20-00-05	-032A	12
S3191-08	53-20-00-06	-015A	12
S3191-08	53-20-00-06	-022A	12
S3191-08	53-20-00-06	-102A	04
S3191-08	53-20-00-06	-107A	04
S3191-08	53-20-00-06	-125A	04
S3191-08	53-20-00-07	-020A	12
S3191-08	53-20-00-07	-029	12
S3191-08	53-20-00-08	-023A	24
S3191-08	53-20-00-09	-008A	10
S3191-08	53-20-00-09	-022A	12
S3191-08	53-20-02-03	-006A	06
S3191-08	53-20-02-03	-012A	04
S3191-08	53-20-03-04	-007	08
S3191-08	53-22-00-01	-015	24
S3191-08	53-22-00-01	-086	28
S3191-08	53-22-00-02	-011	28
S3191-08	53-22-00-02	-085	28
S3191-08	53-22-00-03	-015	28
S3191-08	53-22-00-03	-086	28
S3191-08	53-22-00-04	-013	28

© Cessna Aircraft Company

PART NUMBER	CH SEC SUBJ FIG	ITEM	REQ	PART NUMBER	CH SEC SUBJ FIG	ITEM	REQ
S3191-08	53-22-00-04	-084	28	S3191-08	57-20-01-10	-020A	12
S3191-08	53-22-00-05	-010	28	S3191-08	57-20-01-10	-025A	16
S3191-08	53-22-00-05	-091	15	S3191-08	57-20-01-10	-081A	18
S3191-08	53-22-00-05	-162	04	S3191-08	57-20-01-10	-087A	12
S3191-08	53-22-00-05	-170	06	S3191-08	57-20-01-10	-093A	08
S3191-08	55-30-00-01	-012	04	S3191-08	57-20-01-11	-014A	01
S3191-08	55-30-00-02	-082	30	S3191-08	57-20-01-11	-021A	14
S3191-08	55-30-00-02	-093	54	S3191-08	57-20-01-11	-029A	08
S3191-08	55-30-00-02	-163	04	S3191-08	57-20-01-11	-082A	10
S3191-08	55-30-00-02	-180	04	S3191-08	57-20-01-11	-089A	06
S3191-08	57-20-00-01	-035	04	S3191-08	57-20-01-11	-095A	08
S3191-08	57-20-01-01	-006A	06	S3191-08	57-20-01-11	-100A	02
S3191-08	57-20-01-01	-011A	04	S3191-08	57-20-01-12	-012A	12
S3191-08	57-20-01-01	-016A	04	S3191-08	57-20-01-12	-015A	16
S3191-08	57-20-01-01	-021A	04	S3191-08	57-20-01-12	-081A	04
S3191-08	57-20-01-01	-026A	04	S3191-08	57-20-01-12	-087A	08
S3191-08	57-20-01-01	-031A	04	S3191-08	57-20-01-12	-092A	04
S3191-08	57-20-01-01	-080A	51	S3191-08	57-20-01-12	-096A	04
S3191-08	57-20-01-01	-085A	04	S3191-08	57-20-01-13	-013A	02
S3191-08	57-20-01-01	-090A	04	S3191-08	57-20-01-13	-017A	01
S3191-08	57-20-01-01	-095A	04	S3191-08	57-20-01-13	-022A	04
S3191-08	57-20-01-01	-100A	04	S3191-08	57-20-01-13	-027A	16
S3191-08	57-20-01-01	-105A	04	S3191-08	57-20-01-13	-034A	08
S3191-08	57-20-01-01	-110A	04	S3191-08	57-20-01-13	-080A	06
S3191-08	57-20-01-02	-008A	68	S3191-08	57-20-01-13	-085A	08
S3191-08	57-20-01-02	-014A	20	S3191-08	57-20-01-13	-089A	04
S3191-08	57-20-01-02	-019A	04	S3191-08	57-20-01-14	-011	04
S3191-08	57-20-01-02	-025A	08	S3191-08	57-20-01-14	-015	04
S3191-08	57-20-01-02	-032A	08	S3191-08	57-20-01-14	-019	02
S3191-08	57-20-01-02	-091A	83	S3191-08	57-20-01-14	-023	02
S3191-08	57-20-01-02	-096A	04	S3191-08	57-20-01-14	-082	12
S3191-08	57-20-01-02	-101A	04	S3191-08	57-20-01-14	-088	04
S3191-08	57-20-01-02	-107A	08	S3191-08	57-20-01-14	-095	08
S3191-08	57-20-01-02	-115A	08	S3191-08	57-60-00-01	-030	04
S3191-08	57-20-01-02	-121A	04	S3191-08	57-80-00-01	-088	06
S3191-08	57-20-01-03	-017A	03	S3191-3	53-10-10-02	-004A	03
S3191-08	57-20-01-05	-011A	12	S3191-3	53-10-10-02	-009A	06
S3191-08	57-20-01-05	-016A	20	S3191-3	53-10-10-02	-016A	03
S3191-08	57-20-01-05	-019A	08	S3191-3	53-10-10-02	-021A	06
S3191-08	57-20-01-06	-016A	08	S3191-3	53-10-10-02	-081A	05
S3191-08	57-20-01-06	-024A	18	S3191-3	53-10-10-02	-092A	05
S3191-08	57-20-01-06	-082A	22	S3191-3	55-10-00-01	-106	26
S3191-08	57-20-01-06	-091A	14	S3191-3	55-30-00-01	-014	08
S3191-08	57-20-01-06	-102A	08	S3191-3	57-20-01-02	-092A	16
S3191-08	57-20-01-07	-009A	08	S3191-3	57-20-01-03	-009A	56
S3191-08	57-20-01-07	-017A	18	S3191-3	57-20-01-03	-013A	02
S3191-08	57-20-01-07	-089A	14	S3191-3	57-20-01-04	-013A	94
S3191-08	57-20-01-07	-097A	08	S3191-3	57-20-01-04	-017A	02
S3191-08	57-20-01-08	-004A	02	S3191-3	57-20-01-04	-020A	12
S3191-08	57-20-01-08	-010A	08	S3191-3	57-20-01-06	-083A	02
S3191-08	57-20-01-08	-017A	20	S3191-3	57-20-01-07	-078A	02
S3191-08	57-20-01-08	-082A	06	S3191-3	57-20-01-08	-081A	02
S3191-08	57-20-01-08	-089A	14	S3191-3	57-80-00-01	-018	08
S3191-08	57-20-01-08	-097A	08	S3191-3	57-80-00-01	-031	08
S3191-08	57-20-01-09	-005A	03	S3194-6	52-10-35-01	-028	NP
S3191-08	57-20-01-09	-011A	18	S3200-1	21-30-00-01	-015	01
S3191-08	57-20-01-09	-019A	10	S3200-1	21-30-00-01	-016	01
S3191-08	57-20-01-09	-081A	30	S3203B1	27-26-00-01	-013	01
S3191-08	57-20-01-09	-091A	10	S3216B1	31-10-10-01	-032	01
S3191-08	57-20-01-09	-098A	06	S3216B1	31-10-15-01	-026	01
S3191-08	57-20-01-10	-010A	01	S3216B2	21-30-00-01	-013	01
S3191-08	57-20-01-10	-014A	01	S3217B2	21-30-00-01	-023	03

© Cessna Aircraft Company

PART NUMBER	CH SEC SUBJ FIG	ITEM	REQ	PART NUMBER	CH SEC SUBJ FIG	ITEM	REQ
S3217B2	21-60-00-01	-008	04	S3383-1	32-10-00-01	-112	01
S3217B2	49-40-00-01	-019	01	S3384-3	34-10-00-02	-089	01
S3227-1	53-20-00-02	-002	01	S3384-3	34-10-00-02	-090	01
S3236D16	29-10-00-01	-026	01	S3384-3	34-10-00-02	-091	01
S3236D16	29-10-00-02	-022	01	S3384-3	34-10-00-02	-092	01
S3244-1	52-70-00-01	-001	01	S3384-3	34-10-00-02	-093	01
S3244-1	52-70-00-01	-002	01	S3384-3	34-10-00-02	-094	01
S3244-1	52-70-00-01	-003	01	S3405-1	53-30-00-01	-002	20
S3244-1	52-70-00-01	-004	01	S3405-1	53-30-03-05	-013	AR
S3244-1	52-70-50-01	-003	01	S3405-1	53-30-03-05	-022	AR
S3250-1	52-70-50-01	-001	01	S3405-1	53-30-03-05	-027	13
S3250-1	52-70-50-01	-002	01	S3405-1	53-50-00-01	-002	15
S3275-12W	24-60-00-01	-026	08	S3405-1	53-50-00-01	-014	AR
S3275-28W	24-60-00-01	-027	04	S3405-1	53-50-00-01	-019	AR
S3275-300	24-60-00-01	-018	06	S3405-1	53-50-00-01	-077	AR
S3275-300	24-60-00-01	-028	16	S3405-1	53-50-00-01	-081	AR
S3275-300	24-60-00-01	-035	02	S3405-1	53-50-00-02	-005	AR
S3275-3R	24-60-00-01	-017	06	S3410-8	32-35-00-01	-085A	AR
S3275-401	24-60-00-01	-036	02	S3412-103	53-30-02-03	-081	31
S3275-401	24-60-00-01	-044	04	S3412-103	53-30-02-03	-087	08
S3275-401	24-60-00-01	-046	04	S3412-103	53-30-02-03	-151	18
S3275-401	25-50-00-01	-258	04	S3412-103	53-30-02-03	-156	16
S3275-9W	24-60-00-01	-025	04	S3412-103	53-30-02-03	-162	07
S3275C8W	24-60-00-01	-034	02	S3412-105	53-30-03-05	-003	15
S3275D208	24-60-10-01	-022	06	S3412-105	71-10-00-01	-010	61
S3275D208	24-60-10-02	-022	06	S3412-107	53-30-03-05	-004	07
S3275E203	25-50-00-01	-157	01	S3415-3K	27-10-50-01	-186	01
S3278C4	21-25-00-02	-037	02	S3415-3K	52-10-03-01	-089	02
S3278C5	21-50-00-01	-018	02	S3415-3K	52-10-37-01	-018	01
S3278C5	30-10-30-01	-077	02	S3415-3L	52-10-37-01	-019	01
S3278C5	30-13-10-01	-098	02	S3415-4	52-10-22-02	-173	01
S3278C5	30-20-00-02	-038	02	S3415-4K	27-20-00-01	-123	01
S3278C7	21-25-00-02	-034	02	S3415-5	27-32-00-01	-010	02
S3295-10-15	21-23-00-01	-011	02	S3415-5	27-32-00-01	-020	01
S3295-10-15	21-23-00-01	-076	AR	S3415-5	27-33-00-01	-022	02
S3295-10-15	21-25-00-01	-016	02	S3415-5K	27-10-50-01	-032	01
S3295-10-15	21-25-00-01	-075	10	S3415-5K	52-10-22-02	-041	01
S3295-10-15	21-50-20-01	-013	04	S3415-5L	52-10-22-02	-042	01
S3299A3-06-020	21-25-00-02	-018	08	S3420D1	53-30-02-03	-079	22
S3299A3-06-036	21-25-00-02	-020	01	S3420D2	33-40-35-02	-010	04
S3299A3-06-040	21-25-00-02	-019	01	S3438-0450	30-40-00-01	-010	02
S3307A250	36-13-00-01	-009	02	S3438-0450	30-40-00-01A	-019	02
S3307A250	80-10-00-01	-082	02	S3454-NB27	34-24-01-01	-004	04
S3307A250	80-10-00-01	-152	02	S3461-19	32-20-00-01	-002	02
S3307A700	49-80-00-01	-003	01	S3461-2	32-30-20-01	-002	01
S3348-12-12	24-35-00-01	-007	02	S3461-23	32-30-30-01	-003	01
S3348-12-22	24-30-00-01	-020	02	S3461-24	55-10-00-01	-015	02
S3348-12-30	24-20-00-01	-016	02	S3461-25	55-10-00-01	-019	01
S3348-8-10	24-35-00-01	-081	01	S3461-26	55-10-00-01	-025	02
S3348-8-10	24-35-00-01	-088	01	S3461-27	55-10-00-01	-029	01
S3348-8-10	24-35-00-01	-090	01	S3461-28	27-40-00-01	-006	01
S3358-3-3XX	30-10-15-01	-003	AR	S3461-33	49-10-00-01	-002	03
S3358-3-4XX	53-38-00-01	-005A	AR	S3461-34	49-10-00-01	-017	04
S3358-3-6XX	30-10-15-01	-004	AR	S3461-38	57-80-00-01	-023	01
S3365-1	29-10-10-01	-002	01	S3461-39	57-80-00-01	-002	02
S3365-1	29-10-10-01	-151	01	S3461-40	57-80-00-01	-075	04
S3365-1	73-10-00-01	-028	01	S3461-41	57-80-00-01	-080	02
S3365-1	73-10-00-02	-031	01	S3468-12	57-80-00-01	-156	04
S3366-1	24-20-00-01	-004	01	S3468-2	71-20-00-01	-006	02
S3366-1	24-30-00-01	-010	01	S3468-25	32-30-20-01	-002A	01
S3368-2	38-30-00-02	-006	01	S3468-26	32-20-00-01	-002A	02
S3382-24-20D	28-21-00-02	-207	01	S3468-27	32-30-30-01	-003A	01

© Cessna Aircraft Company

PART NUMBER	CH SEC SUBJ FIG	ITEM	REQ	PART NUMBER	CH SEC SUBJ FIG	ITEM	REQ
S3468-3	71-00-00-01	-003	02	S378-1	27-13-05-01	-165	04
S3468-4	71-20-00-01	-011	02	S378-1	27-60-30-01	-089	04
S3468-6	71-00-00-01	-008	16	S378-2	22-10-10-01	-021	02
S3478-1	24-60-05-03	-026	01	S378-2	27-13-05-01	-006	04
S3478-1	24-60-05-03	-083	01	S378-2	27-13-05-01	-017	01
S35-3000-14	34-30-05-01	-001	01	S378-2	27-13-05-01	-075	04
S3504-4	27-10-15-01	-084	04	S378-2	27-13-05-01	-150	04
S3504-6	27-20-05-01	-016	01	S378-2	27-13-05-01	-173	04
S3505-4	27-30-05-01	-092	02	S378-2	27-60-20-01	-007	02
S3505-4	27-30-05-01	-150	04	S378-2	27-60-20-01	-017	03
S3521-2	53-60-00-01	-018	01	S378-2	27-60-20-01	-153	04
S3521-2	53-60-00-06	-018	01	S378-2	27-60-30-01	-007	08
S3521-3	31-30-00-01	-013	01	S378-2	27-60-30-01	-084	08
S3521-3	33-50-00-01	-005	01	S378-2	27-60-30-01	-094	04
S3521-5	53-10-01-01	-031	02	S378-3	27-10-30-01	-307	02
S3521-5	55-10-00-02	-011	02	S378-4	27-10-15-01	-163	02
S3521-5	57-10-00-01	-002A	04	S378-4	27-20-05-01	-088	01
S3521-6	22-10-10-01	-051	01	S378-4	27-20-05-01	-150	02
S3521-6	27-50-00-01	-006	01	S378-4	27-20-05-02	-083	01
S3521-6	32-20-00-02	-156	01	S378-4	27-30-05-01	-167	04
S3521-6	34-47-05-01	-010	01	S378-4S	27-10-30-01	-237	08
S3521-6	52-10-37-01	-022	01	S378-4S	27-13-00-01	-150	02
S3521-6	53-23-00-03	-013	01	S378-4S	27-13-00-01	-164	02
S3521-6	53-30-00-01	-025	02	S3812E1	29-10-00-08	-045	02
S3521-6	53-30-00-01	-030	02	S3813E1	29-10-00-08	-044	02
S3521-6	53-60-00-01	-017	03	S3813E2	29-10-00-08	-047	02
S3521-6	53-60-00-06	-017	02	S3850D06	29-10-00-01	-165	02
S3521-6	53-60-01-05	-098	01	S3850D06	29-10-00-02	-168	02
S3521-6	55-30-00-04	-020	02	S3850D06	29-10-00-04	-078	01
S3521-6	55-30-00-04	-033	01	S3850D06	29-10-00-04	-152	01
S3521-6	55-30-00-04	-229	04	S3850D06	29-10-00-05	-003	01
S3521-6	57-10-00-01	-002B	03	S3850D06	29-10-00-05	-010	01
S3521-6	57-60-00-01	-078	04	S3850D06	29-10-00-05	-084	01
S3521-6	57-70-00-02	-013	01	S3850D06	29-10-00-05	-088	02
S3521-7	27-20-00-01	-130	01	S3850D06	29-10-00-05	-316	01
S3521-7	27-40-00-01	-029	01	S3850D06	29-10-00-07	-075	02
S3521-7	31-30-00-01	-012	01	S3850D06	29-10-00-07	-155	02
S3521-7	33-50-00-01	-004	02	S3850D06	29-10-00-09	-015	01
S3521-8	30-40-00-01A	-014	01	S3850D06	29-10-00-09	-025	01
S3528-5D	21-25-00-02	-038	01	S3850D06	78-30-10-01	-095	03
S3528-5D	27-25-00-02	-022	01	S3850D06	78-30-10-02	-010	01
S3528-6D	27-10-50-02	-101	01	S3850D06	78-30-10-02	-016	01
S3597-8	24-30-40-01	-001	01	S3850D06	78-30-10-02	-020	01
S3597-8	24-30-40-01	-002	01	S3850D06	78-30-10-02	-095	02
S3602-2	24-60-10-01	-319	01	S3878-1032A07	29-10-05-01	-009	04
S3602-2	24-60-10-01	-320	01	S3878-632A04	21-23-20-01	-021	20
S3602-2	24-60-10-01	-321	01	S3878-632A04	21-23-20-01	-030	04
S3602-2	24-60-10-01	-322	01	S3878-832A04	21-23-20-01	-012	02
S3602-2	24-60-10-02	-318	01	S3884-08K250	21-23-20-01	-010	02
S3602-2	24-60-10-02	-319	01	S3884-08K250	21-23-20-01	-022	13
S3602-2	24-60-10-02	-320	01	S3884-08K250	21-23-20-01	-031	04
S3602-2	24-60-10-02	-321	01	S3884-08K250	25-80-03-01	-003	02
S3602-2	24-60-15-01	-035	01	S3884-08K250	25-80-03-01	-015	17
S3602-2	24-60-15-01	-036	01	S3884-08K250	25-80-03-01	-041	04
S3602-2	24-60-15-01	-037	01	S3884-08K250	25-80-03-01	-114	04
S3602-2	24-60-15-01	-038	01	S394	27-60-20-01	-075	02
S3602-2	24-60-15-01	-039	01	S3940-12	27-30-05-01	-097	02
S3602-2	24-60-15-01	-040	01	S3940-22	27-30-05-01	-155	02
S3723-10	11-N-25-02	-150	02	S3940-4	22-10-10-01	-027	02
S3756-1	49-80-00-01	-013	01	S3940-5	22-10-10-02	-026	01
S378-1	27-11-00-01	-085	02	S3940-6	27-10-30-01	-080	02
S378-1	27-13-05-01	-095	04	S3940-6	27-10-30-01	-175	04

© Cessna Aircraft Company

PART NUMBER	CH SEC SUBJ FIG	ITEM	REQ
S3940-6	27-13-00-01	-155	02
S3940-6	27-20-05-01	-157	02
S3940-7	27-13-00-01	-237	02
S3940-7	27-20-05-01	-229	02
S3940-9	27-20-05-01	-158	02
S3940-9	27-20-05-01	-177	02
S3952-5	27-10-50-01	-189	02
S3952-5	27-10-50-01	-196	02
S3952-5	55-10-00-01	-237	01
S3952-5	55-10-00-01	-244	01
S3952-5	57-60-00-02	-008	02
S3966-2B56.5M	32-51-00-01	-010	01
S3966-2B57.1M	32-51-00-01	-009	01
S3966-2B8.1N	32-51-00-01	-008	02
S3966-4Q42.5Q	27-20-05-01	-001	01
S3986-3	32-20-00-02	-016	01
S3986-3	32-20-00-02	-083	02
S3986-3	32-20-00-02	-108	01
S4014-1	24-60-05-01	-090	01
S4014-1	24-60-05-02	-101	01
S4014-1	24-60-10-01	-181	01
S4014-1	24-60-10-02	-181	01
S4014-1	24-60-15-01	-178	01
S4014-1	24-60-15-01	-179	01
S4014-11	24-60-05-01	-080	01
S4014-11	24-60-05-01	-089	01
S4014-11	24-60-05-02	-087	01
S4014-11	24-60-10-01	-174	02
S4014-11	24-60-10-02	-174	01
S4014-11	24-60-10-02	-175	01
S4014-12	24-60-05-02	-093	01
S4014-2	24-60-05-01	-091	01
S4014-2	24-60-10-01	-176	01
S4014-2	24-60-15-01	-251	01
S4014-3	24-60-05-02	-082	01
S4014-3	24-60-10-01	-178	01
S4014-3	24-60-10-02	-179	01
S4014-3	24-60-15-01	-253	01
S4014-4	24-60-05-02	-080	01
S4014-4	24-60-05-02	-081	01
S4014-4	24-60-10-01	-179	01
S4014-4	24-60-15-01	-180	03
S4014-4	24-60-15-01	-252	02
S4014-5	24-60-05-01	-092	01
S4014-5	24-60-05-01	-093	01
S4014-5	24-60-05-02	-091	01
S4014-5	24-60-10-02	-177	01
S4014-6	24-60-05-01	-082	01
S4014-7	24-60-05-01	-087	01
S4014-7	24-60-10-02	-180	01
S4014-8	24-60-05-02	-085	01
S4015-1LL	24-60-05-01	-081	01
S4015-1LL	24-60-05-01	-088	01
S4015-1LL	24-60-05-02	-086	01
S4015-1LL	24-60-05-02	-088	01
S4015-1LL	24-60-05-02	-092	01
S4015-1LL	24-60-10-01	-175	01
S4015-1LL	24-60-10-01	-177	01
S4015-1LL	24-60-10-02	-176	01
S4015-1LL	24-60-10-02	-178	01
S4015-1LLLL	24-60-05-01	-079	01
S4015-1LLLL	24-60-05-02	-079	01
S4015-1LLLL	24-60-15-01	-181	01
S4015-1LLLR	24-60-15-01	-254	01
S4053-1	52-10-00-01	-185	01
S4053-1	52-40-19-01	-019	01
S4085-1	27-25-00-02	-008	02
S4131-1	24-30-30-01	-007	04
S4189-1	53-10-10-01	-076	01
S4189-1	55-30-10-01	-003	16
S4431-4	27-32-00-01	-021A	01
S4432-3	27-60-00-01	-167A	02
S4432-3	27-60-00-01	-178A	02
S4432-3	36-10-20-02	-103A	01
S4432-3L	27-24-15-01	-014A	01
S4439-2	11-C-31-01	-01	01
S4441-1	11-N-23-02	-003A	01
S45A12	32-33-00-01	-002	01
S5	11-00-00-01	-102	AR
S5-275SS	25-50-00-01	-080	01
S65-247-38	34-50-05-01	-001	01
S65-247170-7	34-50-05-01	-002	02
S65-247176	34-50-05-01	-003	01
S65-247183	34-50-05-01	-005	02
S65-5366-31S	31-32-10-01	-001	01
S65-8280-18	23-11-10-01	-001	01
S65-8280-18	23-11-10-01	-009	01
S65-8280-18	23-11-20-01	-001	01
S67-1575-109	23-15-05-01	-018	01
S67-1575-109	23-15-05-01	-019	01
S67-1575-109	23-15-45-01	-001	01
S67-1575-109	23-15-45-01	-002	01
S67-2002-4	34-40-00-01	-015	02
S72-1735-26	34-47-00-01	-007	01
S72-1735-26	34-47-00-01	-019	01
SB120	24-20-20-01	-002	01
SE	11-00-00-01	-107	AR
SL5001-8	52-20-10-01	-012	01
SL5001-9	52-30-20-01	-002	01
SL5002-3	52-30-20-01	-003	01
SLP6010L10E	28-10-05-01	-011	12
SM600BA20A1	24-60-10-01	-251	01
SM600BA20A1	24-60-10-02	-250	01
SM600BA25A1	24-60-10-01	-250	01
SM600BA35A1	24-60-10-02	-251	01
SM600BA75A1	24-60-15-01	-152	01
SP	11-00-00-01	-093	AR
SS120	24-20-20-01	-001	01
SS4-150	21-23-00-01	-018	03
SS4-250	21-23-00-01	-003	01
SS4-250	21-25-00-01	-108	02
SSPD-113-38	34-50-05-01	-004	01
ST44-12-8	21-26-00-01	-004	01
ST44-18-14	21-26-00-01	-016	02
STL100-005	52-10-31-01	-029	01
STL200-1	52-10-31-01	-027	06
SU	11-00-00-01	-031	AR
SX	11-00-00-01	-037	AR
T32739A	27-50-00-01	-107	01
T7	11-00-00-01	-099	AR
T9	11-00-00-01	-013	AR
TA02D0713D005EP	35-10-00-01	-082	02
TA02D0713D005EP	35-20-00-01	-021	01
TA02D713D04EP	34-10-00-02	-228	07

© Cessna Aircraft Company

PART NUMBER	CH SEC SUBJ FIG	ITEM	REQ
TA03114D032NB	28-11-20-01	-155	04
TA03114D032NB	28-21-00-02	-226	01
TA03115C049EP	32-30-00-02	-187	02
TA03115C054EP	32-43-00-02	-262	02
TA03115C064EP	32-43-00-02	-244	02
TA03115C070EP	32-20-00-01	-016	01
TA03115C086EP	32-49-00-01	-002	02
TA03115C093EP	32-43-00-02	-249	02
TA0960001-36EP	29-23-05-01	-002	02
TA0960001-40EP	29-23-05-01	-076	02
TA713S03T	30-10-00-02	-175	01
TA713S03T	30-10-20-01	-025	04
TA713S03T	30-13-10-01	-093	01
TA713S03T	30-20-00-01	-009	01
TA713S03T	30-20-00-01	-014	01
TA713S03TM	21-50-00-01	-026	01
TA713WSC03TM	21-50-00-01	-025	01
TA713WSC03TM	30-10-30-01	-080	02
TC	11-00-00-01	-110	AR
TF	11-00-00-01	-042	AR
TG	11-00-00-01	-038	AR
THA101	23-13-00-01	-086	01
TI	11-00-00-01	-025	AR
TRAB24/49003P	31-35-00-01	-003	01
TRAB24/49003P	31-35-00-01	-004	01
TRU1-125-1	24-30-55-01	-001	01
TRU1-125-1	24-30-55-01	-003	01
TRU1-125-1A	24-30-55-01	-002	01
TRU1-125-1A	24-30-55-01	-004	01
U50-150SS	21-23-00-01	-017	03
U50-250SS	21-23-00-01	-002	01
U50-250SS	21-25-00-01	-107	02
UG492D/U	53-20-00-02A	-006	01
UG492D/U	53-20-00-02A	-016	01
UG492D/U	53-23-00-03A	-019	01
UR	11-00-00-01	-111	AR
USM14-14J4S	32-43-00-02	-227	04
USM14-14J4S	32-49-00-03	-081	02
USM15-14J4S	32-43-00-02	-255	04
USM15-14J4S	32-49-00-03	-095	02
USM15-14J4S	32-51-00-01	-077	02
USM15-14J6S	32-30-00-03	-021	02
V3	11-00-00-01	-011	AR
V5000-243	49-30-00-01	-005	01
VH	11-00-00-01	-005	AR
VP-B	11-00-00-01	-012	AR
VP-C	11-00-00-01	-021	AR
VP-L	11-00-00-01	-115	AR
VT	11-00-00-01	-043	AR
W908F16C	30-20-00-02	-027	01
W908F24C	30-20-00-02	-019	01
W908F24C	36-10-20-02	-005	04
W908F32C	36-10-20-04	-005	08
W908F32C	80-10-00-01	-095	04
W908F40C	80-10-00-01	-084	04
W922N10DE	28-11-30-01	-011	02
W922N20DE	28-20-21-01	-082	06
W932-16B	30-20-00-01	-003	08
W932-16F	30-20-00-02	-028	02
W932-24B	21-21-00-01	-014	02
W932-24B	21-25-00-01	-003	02
W932-24B	21-70-05-01	-005	01
W932-24B	30-10-30-01	-014	01
W932-24B	30-13-00-01	-007	04
W932-24F	30-20-00-02	-020	01
W932-24F	36-10-20-02	-006	08
W932-28B	21-21-00-01	-022	04
W932-28B	30-10-00-01	-084	04
W932-32B	21-70-05-01	-008	01
W932-32B	30-10-00-01	-019	04
W932-32B	30-10-00-01	-025	04
W932-32B	30-10-00-02	-003	AR
W932-32B	30-10-00-02	-078	06
W932-32B	30-10-00-02	-156	02
W932-32B	36-10-20-04	-024	04
W932-32B	80-10-00-01	-103	04
W932-32F	36-10-20-04	-006	12
W932-32F	80-10-00-01	-096	04
W932-40B	30-10-00-02	-092	04
W932-40B	36-10-20-04	-077	04
W932-40B	36-13-00-01	-016	03
W932-40B	80-10-00-01	-161	01
W932-40F	80-10-00-01	-085	08
W932-48B	36-13-00-01	-005	02
W951C39K1624	28-20-20-01	-023	02
W991-10DE	28-11-30-01	-009	04
W991-10DE	28-20-30-01	-031	04
W991-12DE	28-11-10-01	-173	04
W991-16DE	28-11-10-01	-156	06
W991-16DE	28-20-00-01	-011	04
W991-16DE	28-20-00-02	-002	08
W991-16DE	28-20-00-02	-090	02
W991-16DE	28-20-00-03	-018	02
W991-16DE	28-20-30-01	-014	04
W991-16DE	28-20-30-01	-089	04
W991-16DE	28-23-00-01	-008	AR
W991-16TE	30-20-00-01	-002	04
W991-20DE	28-11-10-01	-170	04
W991-20DE	28-20-21-01	-013	AR
W991-20DE	28-20-21-01	-152	AR
W991-24CE	28-20-20-01	-019	02
W991-24DE	28-11-20-01	-182	10
W991-24TE	21-21-00-01	-013	01
W991-24TE	21-25-00-01	-002	01
W991-24TE	21-70-05-01	-004	01
W991-24TE	30-13-00-01	-006	02
W991-28TE	21-21-00-01	-021	02
W991-28TE	30-10-00-01	-083	02
W991-32DE	28-11-20-01	-162	08
W991-32TE	21-70-05-01	-007	01
W991-32TE	30-10-00-01	-018	02
W991-32TE	30-10-00-01	-024	02
W991-32TE	30-10-00-02	-002	AR
W991-32TE	30-10-00-02	-077	02
W991-32TE	30-10-00-02	-155	01
W991-32TE	36-10-20-04	-023	02
W991-32TE	80-10-00-01	-102	02
W991-40DE	28-20-00-01	-002	02
W991-40DE	28-20-00-02	-081	04
W991-40TE	30-10-00-02	-091	02
W991-40TE	36-10-20-04	-076	02
W991-40TE	36-13-00-01	-015	02
W991-40TE	80-10-00-01	-160	01
W991-40TE	80-10-00-01	-179	01

© Cessna Aircraft Company

PART NUMBER	CH SEC SUBJ FIG	ITEM	REQ	PART NUMBER	CH SEC SUBJ FIG	ITEM	REQ
W991-48TE	36-13-00-01	-004	01	XA	11-00-00-01	-076	AR
W994-16CE	30-20-00-02	-018	01	XB	11-00-00-01	-077	AR
W994-16CE	30-20-00-02	-026	01	XC	11-00-00-01	-078	AR
W994-24CE	36-10-20-02	-004	04	YR	11-00-00-01	-096	AR
W994-32CE	36-10-20-04	-004	08	YU	11-00-00-01	-101	AR
W994-32CE	80-10-00-01	-094	04	YV	11-00-00-01	-114	AR
W994-40CE	80-10-00-01	-083	04	ZK	11-00-00-01	-083	AR
WAC15-6-6	55-20-10-01	-010	02	ZL	11-00-00-01	-085	AR
WC-20T-4	57-10-03-06	-006	01	ZM	11-00-00-01	-086	AR
WG2001AA02	34-20-00-01	-010	02	ZP	11-00-00-01	-090	AR
WP10907	25-25-00-01	-006	01	ZS	11-00-00-01	-103	AR
WP81338-4	25-25-00-01	-003	01	ZT	11-00-00-01	-104	AR
X5S	45-45-00-01	-007	01	ZU	11-00-00-01	-105	AR

© Cessna Aircraft Company

CHAPTER

11

PLACARDS AND MARKINGS

CHAPTER SECTION SUBJECT		NUMBER OF PAGES	DATE
11 - TITLE			
11 - LIST OF EFFECTIVE PAGES			
11 - RECORD OF TEMPORARY REVISIONS			
11 - TABLE OF CONTENTS			
11-00-00	Figure 01	4	Apr 1/2015
11-C-31	Figure 01	2	Oct 1/2015
11-N-22	Figure 01	2	May 1/2014
11-N-22	Figure 02	2	Jan 1/2015
11-N-22	Figure 03	2	May 1/2014
11-N-23	Figure 01	2	May 1/2014
11-N-23	Figure 02	8	Oct 1/2015
11-N-24	Figure 01	2	May 1/2014
11-N-24	Figure 02	8	May 1/2014
11-N-25	Figure 01	4	May 1/2014
11-N-25	Figure 02	6	May 1/2014
11-N-25	Figure 03	2	May 1/2014
11-N-26	Figure 01	2	May 1/2014
11-N-26	Figure 02	4	May 1/2014
11-N-26	Figure 03	4	May 1/2014
11-N-26	Figure 04	2	May 1/2014
11-N-26	Figure 05	4	May 1/2014
11-N-27	Figure 01	4	May 1/2014
11-N-27	Figure 02	4	Jan 1/2015
11-N-28	Figure 01	2	May 1/2014
11-N-28	Figure 02	2	May 1/2014
11-N-28	Figure 03	2	May 1/2014
11-N-33	Figure 03	2	May 1/2014

© Cessna Aircraft Company

RECORD OF TEMPORARY REVISIONS

Temporary Revision Number	Page Number	Issue Date	By	Date Removed	By

SUBJECT	CHAPTER SECTION SUBJECT	FIGURE	EFFECTIVITY START	EFFECTIVITY END
PLACARD LOCATION	11-00-00	01		
CANADIAN INTERIOR PLACARDS AND MARKINGS	11-C-31	01		
U.S. EXTERIOR PLACARDS AND MARKINGS - NOSE	11-N-22	01		
U.S. EXTERIOR PLACARDS AND MARKINGS - FUSELAGE	11-N-22	02		
U.S. EXTERIOR PLACARDS AND MARKINGS - OXYGEN	11-N-22	03		
U.S. EXTERIOR PLACARDS AND MARKINGS - AFT BAGGAGE	11-N-23	01		
U.S. EXTERIOR PLACARDS AND MARKINGS - EMPENNAGE	11-N-23	02		
U.S. EXTERIOR PLACARDS AND MARKINGS - NACELLES AND PYLONS	11-N-24	01		
U.S. EXTERIOR PLACARDS AND MARKINGS - MAIN POWER JUNCTION BOX	11-N-24	02		
U.S. EXTERIOR PLACARDS AND MARKINGS - WINGS	11-N-25	01		
U.S. EXTERIOR PLACARDS AND MARKINGS -FUEL	11-N-25	02		
U.S. EXTERIOR PLACARDS AND MARKINGS - WING FUEL ACCESS	11-N-25	03		
U.S. EXTERIOR PLACARDS AND MARKINGS - NOSE HYDRAULIC SYSTEM	11-N-26	01		
U.S. EXTERIOR PLACARDS AND MARKINGS - FUSELAGE HYDRAULIC SYSTEM	11-N-26	02		
U.S. EXTERIOR PLACARDS AND MARKINGS - EMPENNAGE HYDRAULIC SYSTEM	11-N-26	03		
U.S. EXTERIOR PLACARDS AND MARKINGS - PYLONS HYDRAULIC SYSTEM	11-N-26	04		
U.S. EXTERIOR PLACARDS AND MARKINGS - WINGS HYDRAULIC SYSTEM	11-N-26	05		
U.S. EXTERIOR PLACARDS AND MARKINGS - NOSE LANDING GEAR	11-N-27	01		
U.S. EXTERIOR PLACARDS AND MARKINGS - MAIN LANDING GEAR	11-N-27	02		
U.S. EXTERIOR PLACARDS AND MARKINGS - ENTRANCE DOOR	11-N-28	01		
U.S. EXTERIOR PLACARDS AND MARKINGS - EMERGENCY EXIT DOOR	11-N-28	02		
U.S. EXTERIOR PLACARDS AND MARKINGS - ENTRANCE DOOR STEPS	11-N-28	03		
U.S. INTERIOR PLACARDS AND MARKINGS-AFT CLOSET	11-N-33	03		

© Cessna Aircraft Company

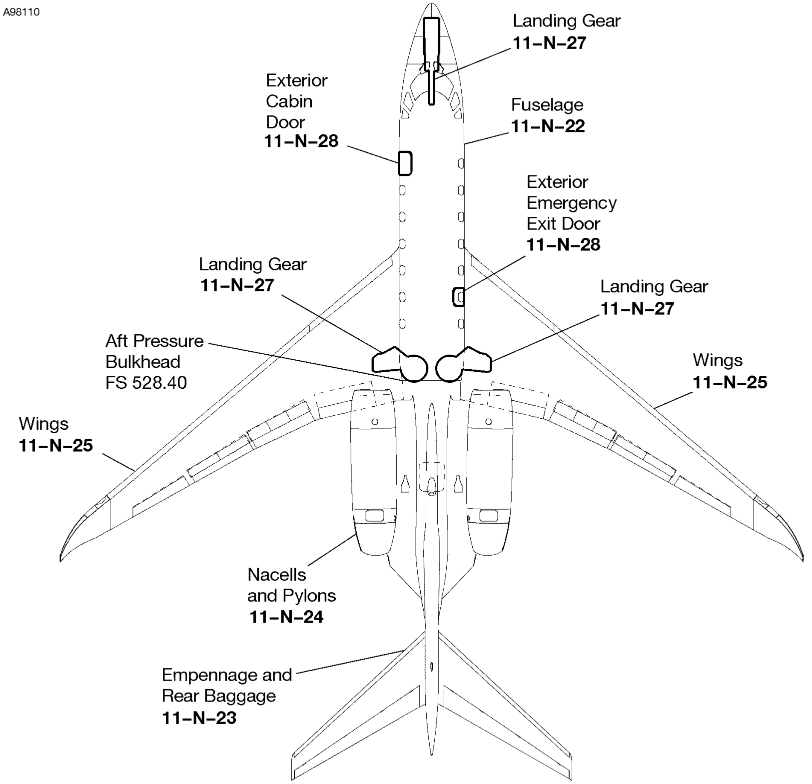

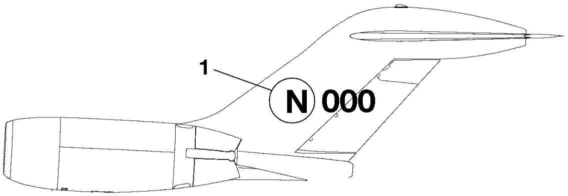

Exterior Sections
ICAO Nationality Marks/Country Designations

6710T1090
6710T1091

PLACARD LOCATION
FIGURE 01 (SHEET 1)

FIG ITEM	PART NUMBER	NOMENCLATURE 1 2 3 4 5 6 7	UNITS PER ASSY
01			
-		PLACARD LOCATION REFER TO NOTE 1	RF R
1	N	. UNITED STATES-U.S. CERTIFIED AIRPLANES	AR R
- 2	LQ	. ARGENTINA-ARGENTINE CERTIFIED AIRPLANES	AR R
- 3	LV	. ARGENTINA-ARGENTINE CERTIFIED AIRPLANES ALT FOR LQ	AR R
- 4	P4	. ARUBA-ARUBAN CERTIFIED AIRPLANES	AR R
- 5	VH	. AUSTRALIA-AUSTRALIAN CERTIFIED AIRPLANES	AR R
- 6	OE	. AUSTRIA-AUSTRIAN CERTIFIED AIRPLANES	AR R
- 7	C6	. BAHAMAS-BAHAMAN CERTIFIED AIRPLANES	AR R
- 8	A9C	. BAHRAIN-BAHRAININ CERTIFIED AIRPLANES	AR R
- 9	8P	. BARBADOS-BARBADIAN CERTIFIED AIRPLANES	AR R
- 10	OO	. BELGIUM-BELGIAN CERTIFIED AIRPLANES.	AR R
- 11	V3	. BELIZE-BELIZE CERTIFIED AIRPLANES	AR R
- 12	VP-B	. BERMUDA-BERMUDAN CERTIFIED AIRPLANES	AR R
- 13	T9	. BOSNIA AND HERZEGOVINIA-BOSNIAN CERTIFIED AIRPLANES.	AR R
- 14	PP	. BRAZIL-BRAZILIAN CERTIFIED AIRPLANES	AR R
- 15	PR	. BRAZIL-BRAZILIAN CERTIFIED AIRPLANES ALT FOR PP	AR R
- 16	PT	. BRAZIL-BRAZILIAN CERTIFIED AIRPLANES ALT FOR PP	AR R
- 17	PU	. BRAZIL-BRAZILIAN CERTIFIED AIRPLANES ALT FOR PP	AR R
- 18	LZ	. BULGARIA-BULGARIAN CERTIFIED AIRPLANES	AR R
- 19	C	. CANADA-CANADIAN CERTIFIED AIRPLANES	AR R
- 20	CF	. CANADA-CANADIAN CERTIFIED AIRPLANES ALT FOR C	AR R
- 21	VP-C	. CAYMAN ISLANDS-CAYMAN ISLANDS CERTIFIED AIRPLANES	AR R
- 22	CC	. CHILE-CHILEAN CERTIFIED AIRPLANES.	AR R
- 23	B	. CHINA-CHINESE CERTIFIED AIRPLANES	AR R
- 24	HK	. COLOMBIA-COLOMBIAN CERTIFIED AIRPLANES	AR R
- 25	TI	. COSTA RICA-COSTA RICAN CERTIFIED AIRPLANES	AR R
- 26	9A	. CROATIA-CROATIAN CERTIFIED AIRPLANES	AR R
- 27	CU	. CUBA-CUBAN CERTIFIED AIRPLANES	AR R
- 28	OK	. CZECH REPUBLIC-CZECH CERTIFIED AIRPLANES	AR R
- 29	OY	. DENMARK-DANISH CERTIFIED AIRPLANES.	AR R
- 30	HI	. DOMINICAN REPUBLIC-DOMINICAN REPUBLICAN CERTIFIED AIRPLANES .	AR R
- 31	SU	. EGYPT-EGYPTIAN CERTIFIED AIRPLANES	AR R
- 32	ES	. ESTONIA-ESTONIAN CERTIFIED AIRPLANES	AR R
- 33	DQ	. FIJI-FIJIAN CERTIFIED AIRPLANES	AR R
- 34	OH	. FINLAND-FINNISH CERTIFIED AIRPLANES	AR R
- 35	F	. FRANCE-FRENCH CERTIFIED AIRPLANES	AR R
- 36	D	. GERMANY-GERMAN CERTIFIED AIRPLANES	AR R
- 37	SX	. GREECE-GREEK CERTIFIED AIRPLANES	AR R
- 38	TG	. GUATEMALA-GUATEMALAN CERTIFIED AIRPLANES	AR R
- 39	3X	. GUINEA-GUINEAN CERTIFIED AIRPLANES	AR R
- 40	HR	. HONDURAS-HONDURAN CERTIFIED AIRPLANES	AR R
- 41	HA	. HUNGARY-HUNGARIAN CERTIFIED AIRPLANES	AR R
- 42	TF	. ICELAND-ICELANDIC CERTIFIED AIRPLANES	AR R
- 43	VT	. INDIA-INDIAN CERTIFIED AIRPLANES	AR R
- 44	PK	. INDONESIA-INDONESIAN CERTIFIED AIRPLANES	AR R
- 45	EI	. IRELAND-IRISH CERTIFIED AIRPLANES	AR R
- 46	EJ	. IRELAND-IRISH CERTIFIED AIRPLANES ALT FOR EI	AR R
- 47	M	. ISLE OF MAN-ISLE OF MAN CERTIFIED AIRPLANES	AR R
- 48	4X	. ISRAEL-ISRAELI CERTIFIED AIRPLANES	AR R
- 49	I	. ITALY-ITALIAN CERTIFIED AIRPLANES	AR R
- 50	JAA	. JAA-JAA CERTIFIED AIRPLANES	AR R
- 51	6Y	. JAMAICA-JAMAICAN CERTIFIED AIRPLANES	AR R
- 52	JA	. JAPAN-JAPANESE CERTIFIED AIRPLANES	AR R
- 53	JY	. JORDANIAN-JORDANIAN CERTIFIED AIRPLANES	AR R
- 54	9K	. KUWAIT-KUWAITI CERTIFIED AIRPLANES	AR R
- 55	OD	. LEBANON-LEBANESE CERTIFIED AIRPLANES	AR R
- 56	HB	. LIECHTENSTEIN-LIECHTENSTEIN CERTIFIED AIRPLANES	AR R
- 57	LY	. LITHUANIA-LITHUANIAN CERTIFIED AIRPLANES.	AR R
- 58	LX	. LUXEMBOURG-LUXEMBOURG CERTIFIED AIRPLANES.	AR R

NOTE 1—THE COUNTRY DESIGNATIONS OBEY THE STANDARDS OF THE AIRCRAFT NATIONALITY MARKS, ESTABLISHED BY THE INTERNATIONAL CIVIL AVIATION ORGANIZATION (IACO). R

- ITEM NOT ILLUSTRATED

A98111

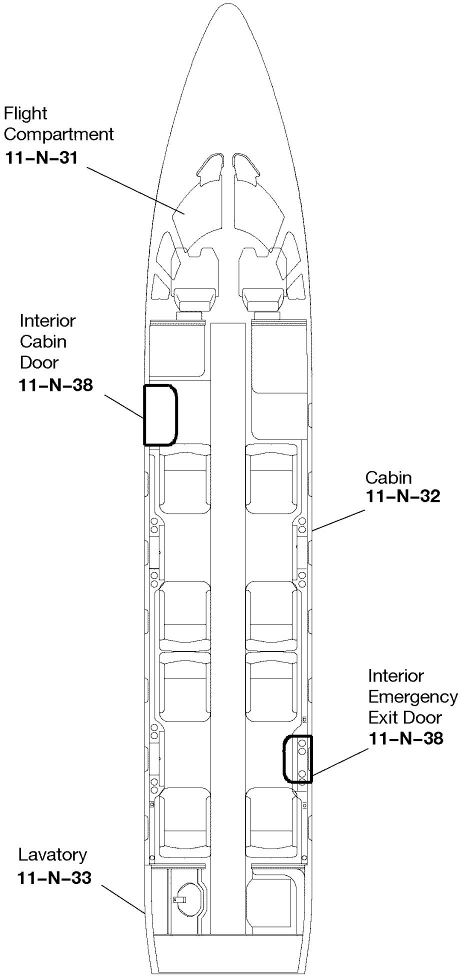

Interior Sections
ICAO Nationality Marks/Country Designations

6710T1092

PLACARD LOCATION
FIGURE 01 (SHEET 2)

FIG ITEM	PART NUMBER	NOMENCLATURE 1 2 3 4 5 6 7	UNITS PER ASSY
01			
- 75	9M	. MALAYSIA-MALAYSIAN CERTIFIED AIRPLANES	AR R
- 76	XA	. MEXICO-MEXICAN CERTIFIED AIRPLANES	AR R
- 77	XB	. MEXICO-MEXICAN CERTIFIED AIRPLANES ALT FOR XA	AR R
- 78	XC	. MEXICO-MEXICAN CERTIFIED AIRPLANES ALT FOR XA	AR R
- 79	3A	. MONACO-MONACAN CERTIFIED AIRPLANES	AR R
- 80	ME	. MONTENEGRO-MONTENEGRIN CERTIFIED AIRPLANES	AR R
- 81	CN	. MOROCCO-MOROCCAN CERTIFIED AIRPLANES	AR R
- 82	PH	. NETHERLANDS-NETHERLANDISH CERTIFIED AIRPLANES	AR R
- 83	ZK	. NEW ZEALAND-NEW ZEALAND CERTIFIED AIRPLANES	AR R
- 84	5N	. NIGERIA NIGERIAN CERTIFIED AIRPLANES	AR R
- 85	ZL	. NEW ZEALAND-NEW ZEALAND CERTIFIED AIRPLANES ALT FOR ZK	AR R
- 86	ZM	. NEW ZEALAND-NEW ZEALAND CERTIFIED AIRPLANES ALT FOR ZK	AR R
- 87	LN	. NORWAY-NORWEGIAN CERTIFIED AIRPLANES	AR R
- 88	AP	. PAKISTAN-PAKISTANI CERTIFIED AIRPLANES	AR R
- 89	HP	. PANAMA-PANAMANIAN CERTIFIED AIRPLANES	AR R
- 90	ZP	. PARAGUAY-PARAGUAIAN CERTIFIED AIRPLANES	AR R
- 91	OB	. PERU-PERUVIAN CERTIFIED AIRPLANES	AR R
- 92	RP	. PHILIPPINES-PHILIPPINE CERTIFIED AIRPLANES	AR R
- 93	SP	. POLAND-POLISH CERTIFIED AIRPLANES	AR R
- 94	CR	. PORTUGAL-PORTUGUESE CERTIFIED AIRPLANES	AR R
- 95	CS	. PORTUGAL-PORTUGUESE CERTIFIED AIRPLANES ALT FOR CR	AR R
- 96	YR	. ROMANIA-ROMANIA CERTIFIED AIRPLANES	AR R
- 97	A7	. QATAR-QUATARI CERTIFIED AIRPLANES	AR R
- 98	RA	. RUSSIA-RUSSIAN CERTIFIED AIRPLANES	AR R
- 99	T7	. SAN MARINO-SAMMARINESE CERTIFIED AIRPLANES	AR R
- 100	HZ	. SAUDI ARABIA-SAUDI ARABIAN CERTIFIED AIRPLANES	AR R
- 101	YU	. SERBIA-SERBIAN CERTIFIED AIRPLANES	AR R
- 102	S5	. SLOVENIA-SLOVENIAN CERTIFIED AIRPLANES	AR R
- 103	ZS	. SOUTH AFRICA-SOUTH AFRICAN CERTIFIED AIRPLANES	AR R
- 104	ZT	. SOUTH AFRICA-SOUTH AFRICAN CERTIFIED AIRPLANES ALT FOR ZS	AR R
- 105	ZU	. SOUTH AFRICA-SOUTH AFRICAN CERTIFIED AIRPLANES ALT FOR ZS	AR R
- 106	EC	. SPAIN-SPANISH CERTIFIED AIRPLANES	AR R
- 107	SE	. SWEDEN-SWEDISH CERTIFIED AIRPLANES	AR R
- 108	HB	. SWITZERLAND-SWISS CERTIFIED AIRPLANES	AR R
- 109	HS	. THAILAND-THAI CERTIFIED AIRPLANES	AR R
- 110	TC	. TURKEY-TURKISH CERTIFIED AIRPLANES	AR R
- 111	UR	. UKRAINE-UKRAINIAN CERTIFIED AIRPLANES	AR R
- 112	A6	. UNITED ARAB EMIRATES-EMIRATI CERTIFIED AIRPLANES	AR R
- 113	G	. UNITED KINGDOM-BRITISH CERTIFIED AIRPLANES	AR R
- 114	YV	. VENEZUELA-VENEZUELAN CERTIFIED AIRPLANES	AR R
- 115	VP-L	. VIRGIN ISLANDS-VIRGIN ISLANDS CERTIFIED AIRPLANES	AR R

- ITEM NOT ILLUSTRATED

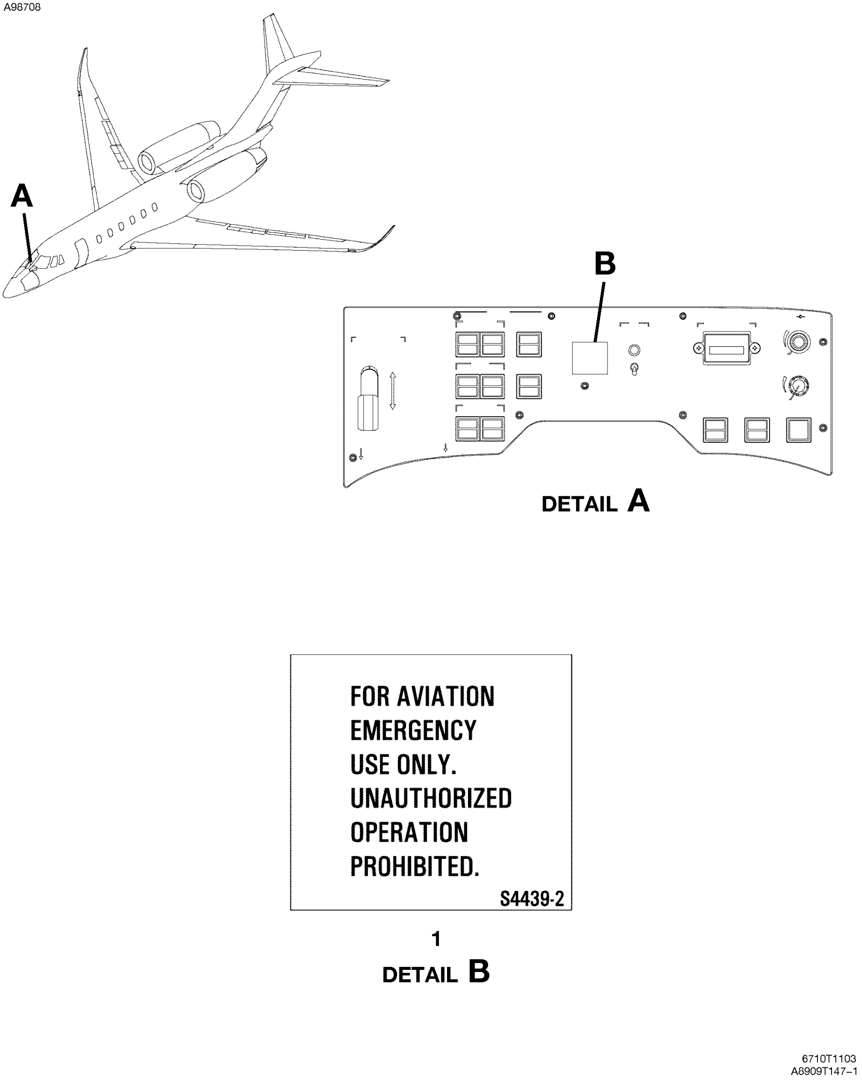

CANADIAN INTERIOR PLACARDS AND MARKINGS
FIGURE 01 (SHEET 1)

FIG ITEM	PART NUMBER	NOMENCLATURE 1 2 3 4 5 6 7			UNITS PER ASSY
01					
-		CANADIAN INTERIOR PLACARDS AND MARKINGS - FLIGHT COMPARTMENT			RF R
1	S4439-2	. PLACARD-ELT	0518	& ON	01 R

- ITEM NOT ILLUSTRATED

A91311

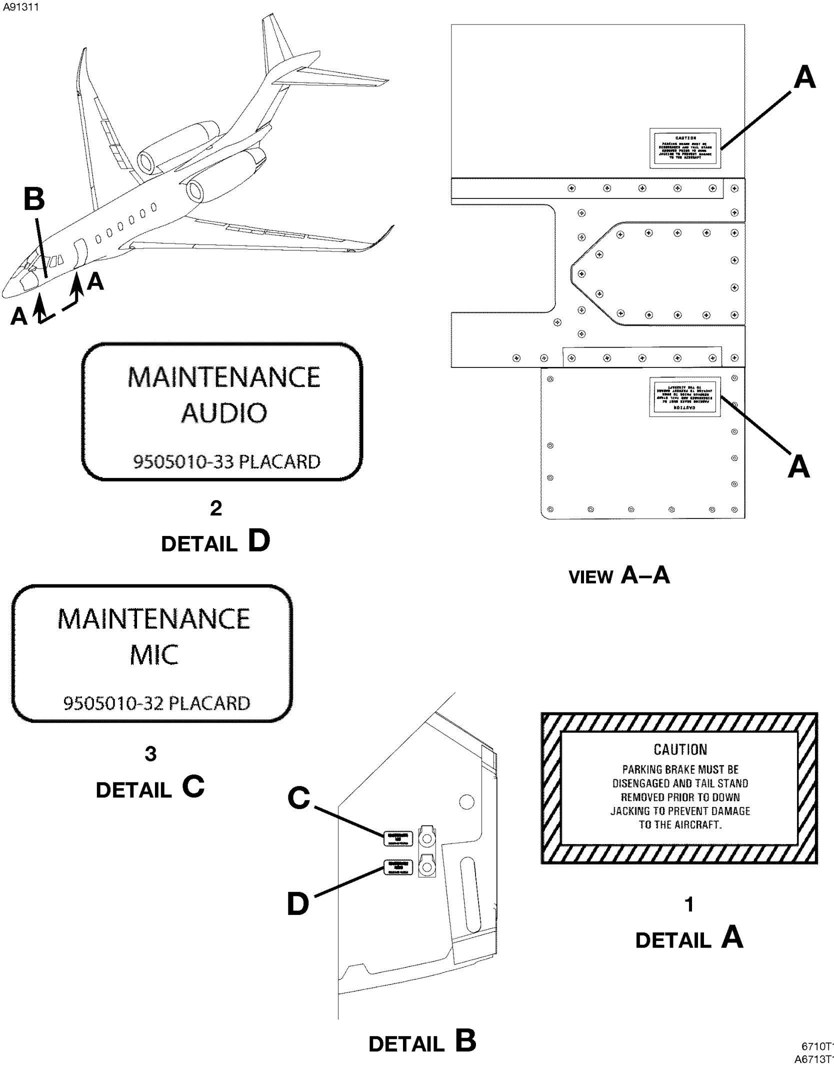

6710T1103
A6713T1139
B6713T1140

U.S. EXTERIOR PLACARDS AND MARKINGS - NOSE
FIGURE 01 (SHEET 1)

FIG ITEM	PART NUMBER	NOMENCLATURE 1 2 3 4 5 6 7	UNITS PER ASSY
01			
-		U.S. EXTERIOR PLACARDS AND MARKINGS - NOSE	RF
1	6705010-2	. PLACARD-JACK REMOVAL CAUTION.	02
2	9505010-33	. PLACARD-MAINTENANCE AUDIO	01
3	9505010-32	. PLACARD-MAINTENANCE MIC	01

- ITEM NOT ILLUSTRATED

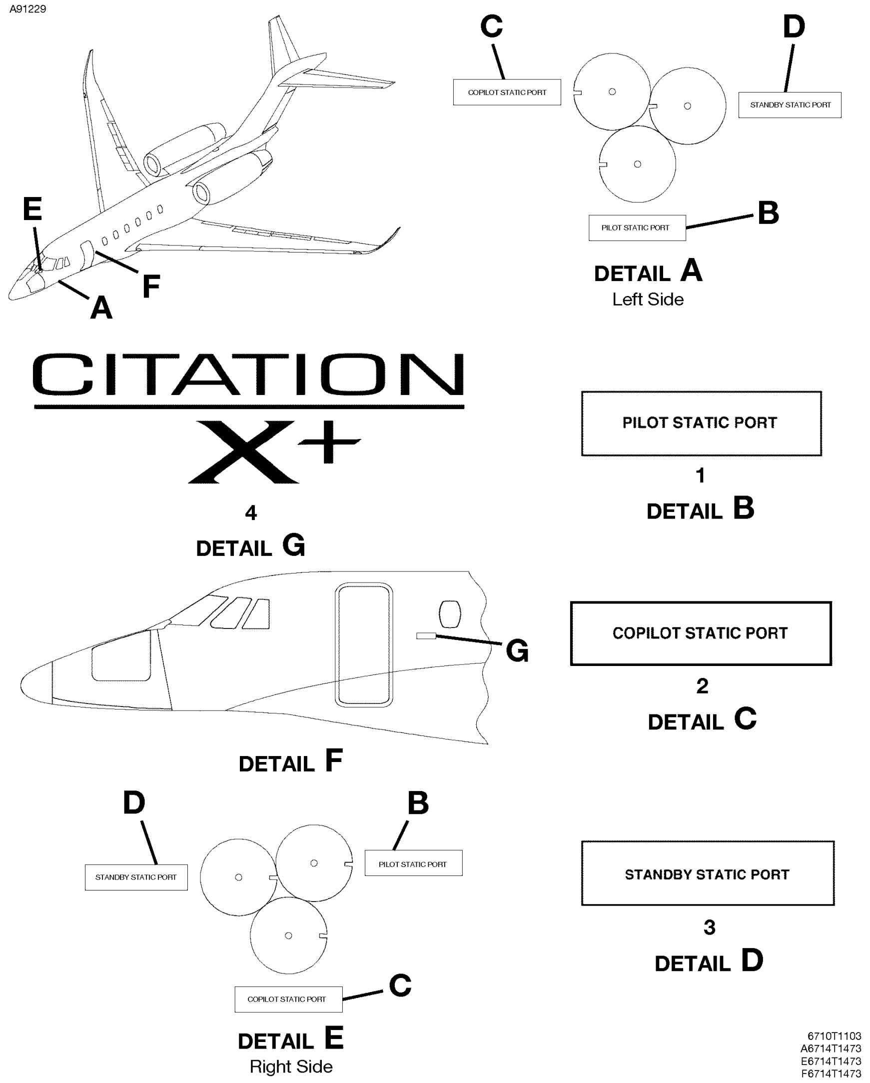

U.S. EXTERIOR PLACARDS AND MARKINGS - FUSELAGE
FIGURE 02 (SHEET 1)

FIG ITEM	PART NUMBER	NOMENCLATURE 1 2 3 4 5 6 7	UNITS PER ASSY
02			
-		U.S. EXTERIOR PLACARDS AND MARKINGS - FUSELAGE	RF
1	6305000-9	. PLACARD-PILOT STATIC LH AND RH	02
2	6305000-10	. PLACARD-COPILOT STATIC LH AND RH	02
3	6305310-1	. PLACARD-STANDBY STATIC PORT LH AND RH	02
4	4416001-36	. DECAL-X+ INSIGNIA	02 R

- ITEM NOT ILLUSTRATED

A87838

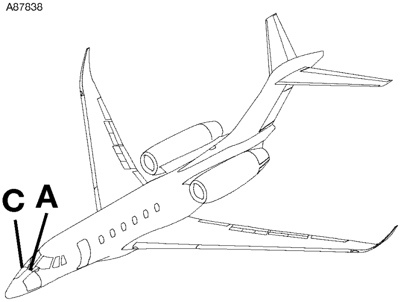

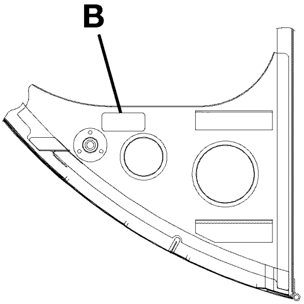

DETAIL A
Looking Aft at FS 90.20

OXYGEN HIGH
PRESSURE RELIEF
DO NOT COVER

2

▲ **DETAIL E**

OXYGEN FILLER
AVIATORS BREATHING OXYGEN
PER MIL-0-27210
SEE MAINTENANCE MANUAL
FOR SERVICING INSTRUCTIONS

1

DETAIL B

OXYGEN
FILL

3

▲ **DETAIL D**

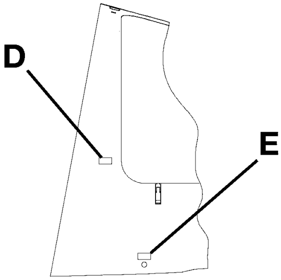

DETAIL C
Looking Inboard at Right Side Baggage Door

▲ Required for Dispatch

6710T1103
A6710T1066
C6710T1065

U.S. EXTERIOR PLACARDS AND MARKINGS - OXYGEN
FIGURE 03 (SHEET 1)

FIG ITEM	PART NUMBER	NOMENCLATURE 1 2 3 4 5 6 7	UNITS PER ASSY
03			
-		U.S. EXTERIOR PLACARDS AND MARKINGS - OXYGEN	RF
1	6200181-75	. PLACARD-FILLER	01
2	0800181-13	. PLACARD-HIGH PRESSURE RELIEF	01
3	5501001-30	. DECAL-FILL	01

- ITEM NOT ILLUSTRATED

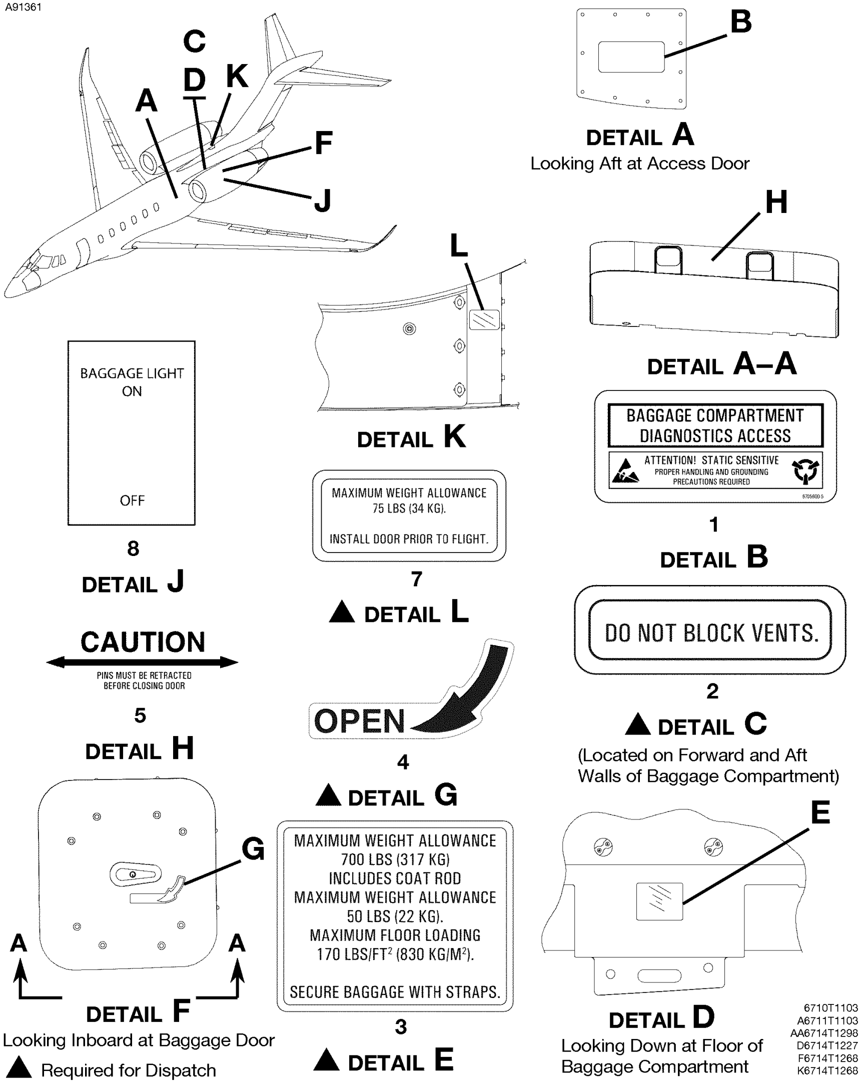

U.S. EXTERIOR PLACARDS AND MARKINGS - AFT BAGGAGE
FIGURE 01 (SHEET 1)

FIG ITEM	PART NUMBER	NOMENCLATURE 1 2 3 4 5 6 7	UNITS PER ASSY
01			
-		U.S. EXTERIOR PLACARDS AND MARKINGS - AFT BAGGAGE	RF
1	6705600-5	. PLACARD-DIAGNOSTICS ACCESS	01
2	4416000-130	. PLACARD-DO NOT BLOCK VENT	02
3	4416004-93	. PLACARD-MAX WEIGHT	01
4	4416000-111	. DECAL-BAGGAGE DOOR OPEN	01
5	6719045-13	. SILKSCREEN-BAGGAGE DOOR CAUTION FSO 4416002-212	NP
- 6	4416002-212	. PLACARD-BAGGAGE DOOR CAUTION	01
7	4416004-96	. PLACARD-SKI COMPARTMENT MAX WEIGHT	01
8	6718425-13	. SILKSCREEN-BAGGAGE LIGHT	01

- ITEM NOT ILLUSTRATED

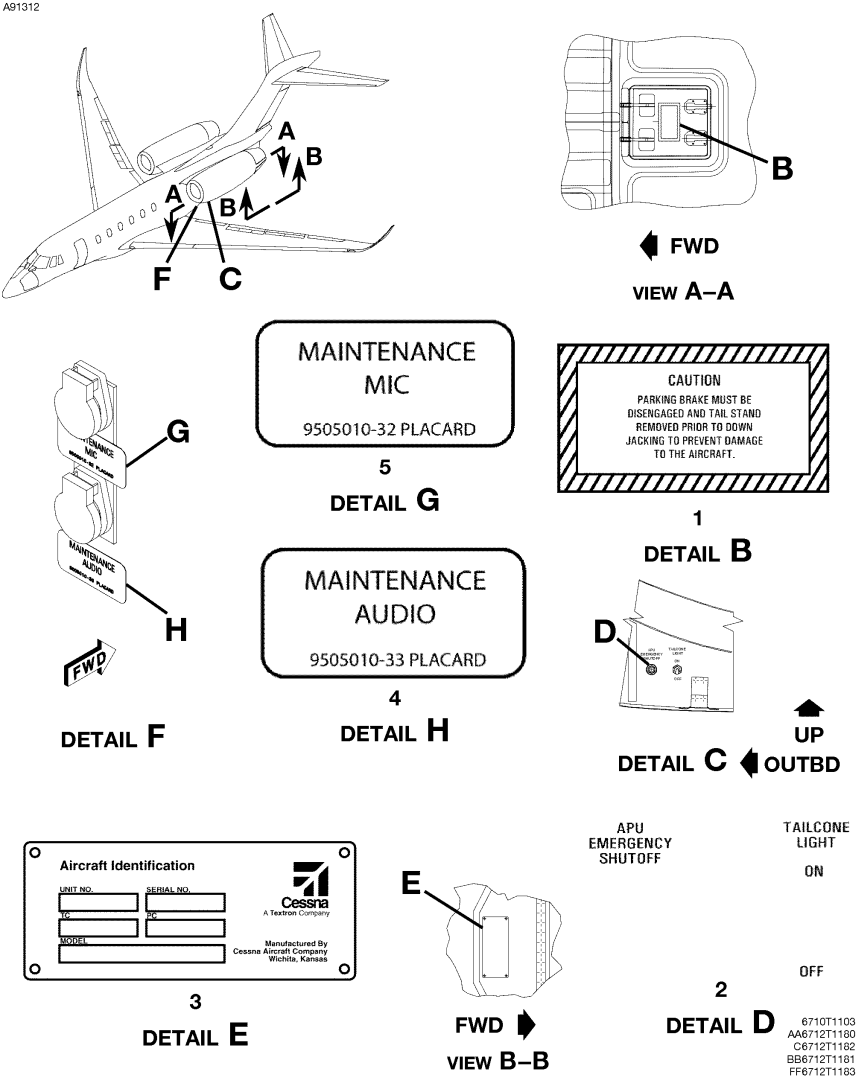

U.S. EXTERIOR PLACARDS AND MARKINGS - EMPENNAGE
FIGURE 02 (SHEET 1)

FIG ITEM	PART NUMBER	NOMENCLATURE 1 2 3 4 5 6 7			UNITS PER ASSY	
02						
-		U.S. EXTERIOR PLACARDS AND MARKINGS - EMPENNAGE			RF	
1	6705010-2	. PLACARD-JACK REMOVAL CAUTION			01	
2	6718314-4	. DECAL-APU EMERGENCY SHUTOFF			01	
3	S2807-1	. NAMEPLATE-AIRPLANE ID REFER TO NOTE 1	0001	0519	01	R
- 3A	S4441-1	. NAMEPLATE-AIRPLANE ID REFER TO NOTE 1	0520	& ON	01	R
4	9505010-33	. PLACARD-MAINTENANCE AUDIO			01	
5	9505010-32	. PLACARD-MAINTENANCE MIC			01	

NOTE 1—WHEN ORDERING THIS PART, THE OWNER MUST SEND A NOTARIZED DOCUMENT STATING THE REASON FOR ORDERING A NEW ID PLATE, TYPE CERTIFICATE NUMBER, PRODUCTION CERTIFICATE NUMBER, ID PLATE NUMBER AND MODEL NUMBER. THE OLD ID PLATE FROM THE AIRPLANE SHOULD BE ATTACHED TO THE ORDER, IF AVAILABLE. IF NOT ATTACHED, THE NEW PLATE WILL BE STAMPED DUPLICATE.

- ITEM NOT ILLUSTRATED

A92773

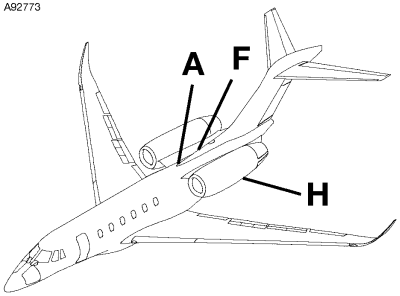

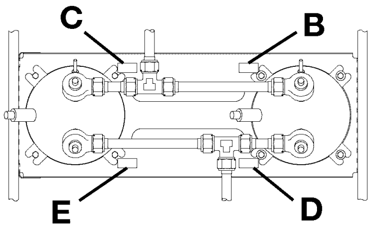

DETAIL A
Looking Up at Engine Fire Extinguisher

BUZZER INDICATES ELT ACTIVATION
ELT MUST BE RESET IN COCKPIT
OR BAGGAGE COMPARTMENT

80

DETAIL H

BOTTLE #2
LEFT SIDE
UT024
6755009-2

77

DETAIL B

BUZZER INDICATES ELT ACTIVATION ELT MUST
BE RESET IN COCKPIT OR BAGGAGE COMPARTMENT

79

DETAIL G

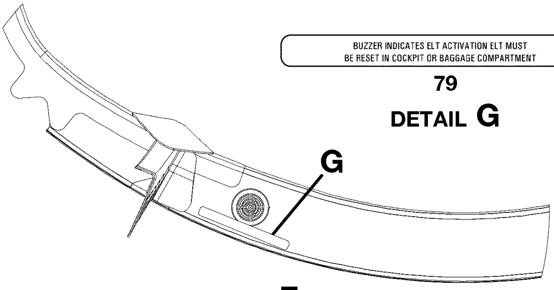

DETAIL F
Looking Aft at Elt Buzzer

BOTTLE #1
LEFT SIDE
UT025
6755009-1

75

DETAIL C

BOTTLE #1
RIGHT SIDE
UT025
6755009-3

76

DETAIL E

BOTTLE #2
RIGHT SIDE
UT024
6755009-4

78

DETAIL D

6710T1103
A6714T1159
F6712T1197

U.S. EXTERIOR PLACARDS AND MARKINGS - EMPENNAGE
FIGURE 02 (SHEET 2)

FIG ITEM	PART NUMBER	NOMENCLATURE 1 2 3 4 5 6 7	UNITS PER ASSY
02			
75	6755009-1	. PLACARD-FIRE EXTINGUISHER LH BOTTLE #1 REFER TO NOTE 1	01
76	6755009-3	. PLACARD-FIRE EXTINGUISHER RH BOTTLE #1 REFER TO NOTE 1	01
77	6755009-2	. PLACARD-FIRE EXTINGUISHER LH BOTTLE #2 REFER TO NOTE 1	01
78	6755009-4	. PLACARD-FIRE EXTINGUISHER RH BOTTLE #2 REFER TO NOTE 1	01
79	9502035-2	. PLACARD-ELT ACTIVATION BUZZER	01
80	9502035-3	. PLACARD-ELT ACTIVATION BUZZER	01

- ITEM NOT ILLUSTRATED

A92774

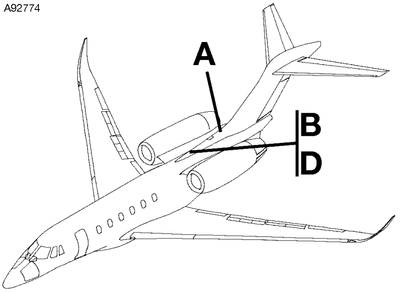

GROUND (GPU) START
CART CONNECTION

1) CONNECT BLEED AIR SUPPLY HOSE TO QUICK DISCONNECT NIPPLE.
2) ACTIVATE AIR SUPPLY FROM GPU.
3) REFER TO AFM SECTION 3 FOR NORMAL ENGINE STARTING PROCEDURES.

150

DETAIL A
Located on Inside of Ground Start Door

OVERFILL LIGHT SERVICE OVERRIDE

IF THE RED OVERFILL LIGHT REMAINS ILLUMINATED AFTER THE TANK IS DRAINED, HAVE AN ADDITIONAL SERVICE PERSON HOLD DOWN THE FLUSH SWITCH WHILE SERVICING. CAUTION: DO NOT OVERFILL TANK

154

DETAIL G

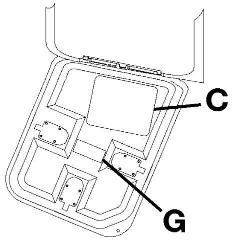

DETAIL B
Looking at Inside of
Toilet Service Door

ATTENTION!
LEFT SIDE BATTERY MUST BE
CONNECTED WHEN SERVICING TOILET

153

DETAIL F

PRECHARGE LEVEL	OVERFILL LEVEL

152

DETAIL E

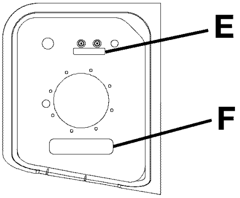

DETAIL D
Looking Inbd At
Toilet Service Door

TOILET SERVICE INSTRUCTIONS

1) CONNECT LEFT SIDE BATTERY.
2) TEST INDICATOR LIGHTS BEFORE SERVICING TOILET.
3) REMOVE WATER FILLER CAP. OPEN WASTE DRAIN VALVE OUTER DOOR.
4) CONNECT WATER FILL HOSE AND WASTE DRAIN HOSE FROM SERVICE GROUND UNIT TO AIRCRAFT SERVICE PANEL CONNECTIONS.
5) TOGGLE "PUSH TO OPEN" LEVER ON UPPER EDGE OF WASTE DRAIN VALVE TO OPEN INNER WASTE DRAIN VALVE FLAPPER DOOR.
6) TO DUMP WASTE, PULL DRAIN VALVE HANDLE AND TURN TO LOCK.
7) TURN INLET WATER ON AND RINSE TANK WITH DRAIN VALVE OPEN.
8) RELEASE DRAIN VALVE HANDLE AND FILL TANK WITH 3 GALLONS / 11 LITERS OF WATER.
9) TURN WATER OFF AND OPEN DRAIN VALVE TO EMPTY TANK.
10) MAXIMUM CAPACITY OF TOILET TANK IS 5 GALLONS / 18.9 LITERS (NOTE "OVERFILL LEVEL" LIGHT).
11) RELEASE DRAIN VALVE HANDLE. CHARGE TOILET TANK WITH 1.0 GALLON / 3.7 LITERS OF CHEMICAL SOLUTION TO PRECHARGE LEVEL (NOTE "PRECHARGE LEVEL" LIGHT).
12) DISCONNECT WATER FILL HOSE AND WASTE DRAIN HOSE FROM AIRCRAFT SERVICE PANEL CONNECTIONS.
13) REPLACE WATER FILLER CAP AND CLOSE OUTER WASTE DRAIN VALVE DOOR, WHICH IN TURN CLOSES THE INNER FLAPPER DOOR.
14) CLOSE AND SECURE AIRCRAFT EXTERIOR SERVICE PANEL DOOR.

151

DETAIL C

6710T1001
B6714T1206
D6714T1288

U.S. EXTERIOR PLACARDS AND MARKINGS - EMPENNAGE
FIGURE 02 (SHEET 3)

FIG ITEM	PART NUMBER	NOMENCLATURE 1 2 3 4 5 6 7	UNITS PER ASSY
02			
150	6754615-16	. PLACARD-GROUND START CONNECTION	01
151	4416004-189	. PLACARD-TOILET SERVICE INSTRUCTIONS	01
152	6719026-11	. PLACARD-TOLIET SERVICE LEVEL	01
153	4919243-13	. PLACARD-BATTERY WARNING	01
154	4416075-111	. PLACARD-OVERFILL SERVICE OVERRIDE	01

- ITEM NOT ILLUSTRATED

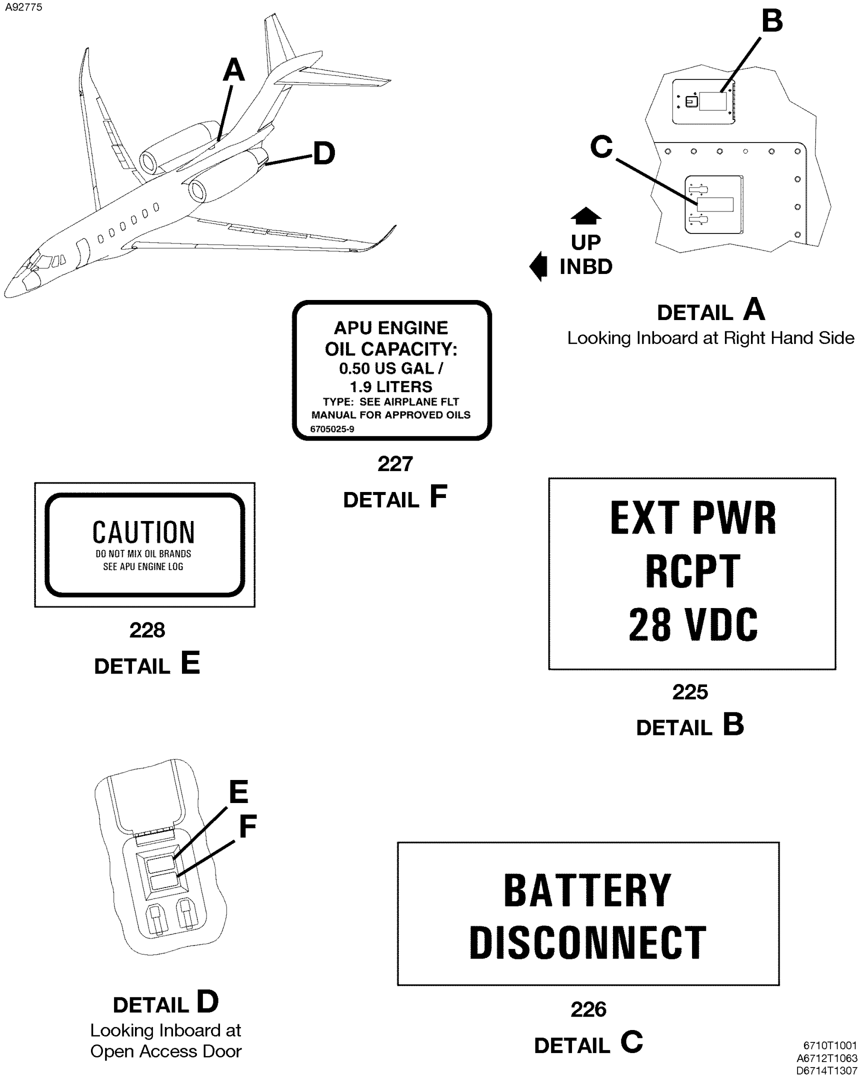

U.S. EXTERIOR PLACARDS AND MARKINGS - EMPENNAGE
FIGURE 02 (SHEET 4)

FIG ITEM	PART NUMBER	NOMENCLATURE 1 2 3 4 5 6 7	UNITS PER ASSY
02			
225	6705425-4	. PLACARD-EXTERNAL POWER RECEPTACLE	01
226	6705425-5	. PLACARD-BATTERY DISCONNECT	02
227	6705025-9	. PLACARD-APU ENGINE OIL	01
228	6705025-6	. PLACARD-CAUTION APU OIL MIXING	01

- ITEM NOT ILLUSTRATED

A92772

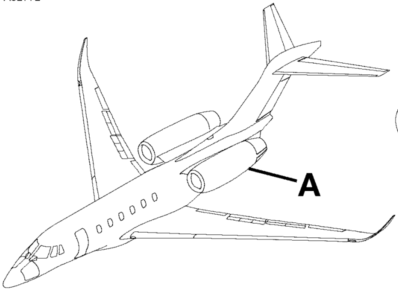

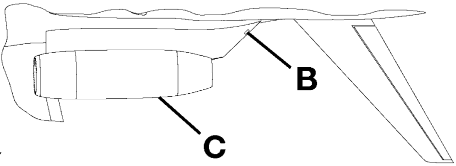

DETAIL A
Looking Inboard at Left Side

3
▲ **DETAIL E**

1
DETAIL B

2
DETAIL D

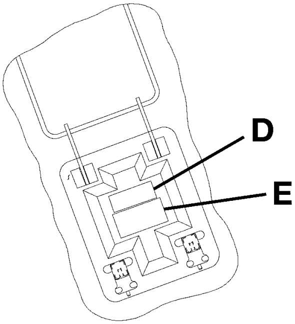

DETAIL C
Looking Forward at Opened Access Door

▲ Required for Dispatch

6710T1103
A6712T1118
C6712T1119

U.S. EXTERIOR PLACARDS AND MARKINGS - NACELLES AND PYLONS
FIGURE 01 (SHEET 1)

FIG ITEM	PART NUMBER	NOMENCLATURE 1 2 3 4 5 6 7	UNITS PER ASSY
01			
-		U.S. EXTERIOR PLACARDS AND MARKINGS - NACELLES AND PYLONS	RF
1	6705010-1	. PLACARD-NO STEP	10
2	6705025-4	. PLACARD-CAUTION OIL MIXING	02
3	6705025-10	. PLACARD-ENGINE OIL	02

- ITEM NOT ILLUSTRATED

A93958

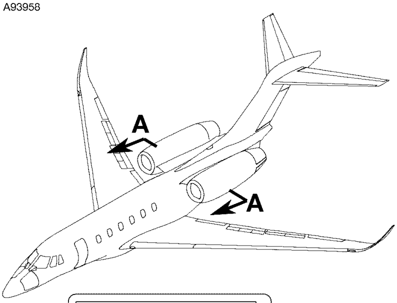

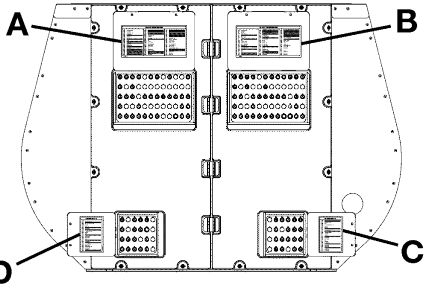

VIEW A–A
View Looking Forward

LH EMERGENCY CB

HZ005	EMER BATT PACK FWD
HZ007	[redacted]
HZ009	L AC OVERVOLTAGE MODULE
HZ011	L FADEC A
HZ013	R FADEC A
HZ015	[redacted]
HZ017	L PRECOOLER
HZ019	[redacted]
HZ021	UPPER YAW DAMPER A
HZ023	HF 1 REC
HZ025	HF 1
HZ027	[redacted]
HZ029	ENGINE INTER 2
HZ031	L FIRE DETECT
HZ033	DCU 2
HZ035	[redacted]
HZ037	RUDDER LIMIT A
HZ039	[redacted]
HZ041	APU GEN SENSE
HZ043	L DISTR EMER
HZ045	ENTRY/TAILCONE LTS
HZ047	BATT SENSE 1
HZ049	PYLON LTS
HZ051	[redacted]

9509218-5

4
DETAIL D

LH J-BOX CIRCUIT BREAKERS

HZ101	L LANDING/REC LTS	HZ121	[redacted]	HZ141	[redacted]
HZ102	GND REC LT	HZ122	[redacted]	HZ142	[redacted]
HZ103	PRI STAB TRIM CONT	HZ123	[redacted]	HZ143	[redacted]
HZ104	ENGINE INTER 2 AUX	HZ124	[redacted]	HZ144	[redacted]
HZ105	[redacted]	HZ125	CB MONITOR A PCB	HZ145	[redacted]
HZ106	L FUEL CONT	HZ126	SEAT BELT	HZ146	[redacted]
HZ107	FLAP CONT	HZ127	BAG DR SEAL	HZ147	L FUEL BOOST RMT
HZ108	[redacted]	HZ128	[redacted]	HZ148	L LANDING / REC LTS RMT
HZ109	L WARN	HZ129	CVR	HZ149	PHONE ROUTER
HZ110	[redacted]	HZ130	DCU 2 AUX	HZ150	RADIO ALTIMETER
HZ111	[redacted]	HZ131	WING INSPECT LT	HZ151	L YAW DAMPER
HZ112	DIAGNOSTICS	HZ132	ANTI-COLLISION LT	HZ152	SATCOM DATALINK 1
HZ113	L BLEED AIR CONT	HZ133	L FUEL QUANTITY	HZ153	SATCOM DATALINK 2
HZ114	[redacted]	HZ134	L PCU MONITOR	HZ154	1200VA INVERTER
HZ115	L AVN SW LTS	HZ135	ARES A	HZ155	28VDC INVTR RMT ON / OFF
HZ116	[redacted]	HZ136	L FUEL TRANSFER	HZ156	[redacted]
HZ117	[redacted]	HZ137	L BLEED AIR MONITOR	HZ157	[redacted]
HZ118	[redacted]	HZ138	[redacted]	HZ158	L FAIRING HEAT
HZ119	[redacted]	HZ139	[redacted]	HZ159	L GEN SENSE
HZ120	[redacted]	HZ140	L BATT HEATER	HZ160	L DISTR GEN

9509218-3

1
DETAIL A

RH EMERGENCY CB

HZ006	[redacted]
HZ008	EMER BATT PACK AFT
HZ010	PA AMP
HZ012	R AC OVERVOLTAGE MODULE
HZ014	L FADEC B
HZ016	R FADEC B
HZ018	[redacted]
HZ020	R PRECOOLER CONT
HZ022	[redacted]
HZ024	UPPER YAW DAMPER B
HZ026	SEC TRIM 1
HZ028	SEC TRIM 2
HZ030	[redacted]
HZ032	ENGINE INTER 3
HZ034	R FIRE DETECT
HZ036	DCU 3
HZ038	PITCH FEEL
HZ040	RUDDER LIMIT B
HZ042	[redacted]
HZ044	L FUEL BOOST
HZ046	R DISTR EMER
HZ048	[redacted]
HZ050	BATT SENSE 2
HZ052	BAGGAGE LTS

9509218-4

3
DETAIL C

RH J–BOX CIRCUIT BREAKERS

HZ201	R LANDING/REC LTS	HZ221	[redacted]	HZ241	[redacted]
HZ202	PULSE LTS	HZ222	[redacted]	HZ242	[redacted]
HZ203	NAV LTS	HZ223	[redacted]	HZ243	[redacted]
HZ204	ENGINE INTER 3 AUX	HZ224	[redacted]	HZ244	[redacted]
HZ205	[redacted]	HZ225	CB MONITOR B PCB	HZ245	[redacted]
HZ206	R FUEL CONT	HZ226	BAG DR VALVE HEAT	HZ246	[redacted]
HZ207	BAGGAGE FAN	HZ227	[redacted]	HZ247	R LANDING/REC LTS RMT
HZ208	ELT	HZ228	DOWNWASH LTS	HZ248	[redacted]
HZ209	R WARN	HZ229	TAXI LTS	HZ249	LIGHTNING DETECT
HZ210	CENTER FUEL QTY	HZ230	DCU 3 AUX	HZ250	R YAW DAMPER
HZ211	STANDBY BUS FEED	HZ231	TAIL FLOOD LTS	HZ251	ADF 1
HZ212	BAG SMOKE DETECT	HZ232	R PCU MONITOR	HZ252	PHONE XCVR
HZ213	R BLEED AIR CONT	HZ233	R FUEL QUANTITY	HZ253	BROADBAND 1 CONFIG
HZ214	[redacted]	HZ234	[redacted]	HZ254	BROADBAND 1
HZ215	R AVN SW LTS	HZ235	ARES B	HZ255	BROADBAND 2
HZ216	[redacted]	HZ236	R FUEL TRANSFER	HZ256	HF 2 REC
HZ217	QAR	HZ237	R BLEED AIR MONITOR	HZ257	HF 2
HZ218	FDR	HZ238	[redacted]	HZ258	R FAIRING HEAT
HZ219	[redacted]	HZ239	[redacted]	HZ259	R GEN SENSE
HZ220	[redacted]	HZ240	R BATT HEATER	HZ260	R DISTR GEN

9509218–17

2
DETAIL B

6710T1103
9509218–1

U.S. EXTERIOR PLACARDS AND MARKINGS - MAIN POWER JUNCTION BOX
FIGURE 02 (SHEET 1)

FIG ITEM	PART NUMBER	NOMENCLATURE 1 2 3 4 5 6 7	UNITS PER ASSY
02			
-		U.S. EXTERIOR PLACARDS AND MARKINGS - MAIN POWER JUNCTION BOX	RF
1	9509218-3	. PLACARD-LH CIRCUIT BREAKER	01
2	9509218-17	. PLACARD-RH CIRCUIT BREAKER	01
3	9509218-4	. PLACARD-RH EMERGENCY CIRCUIT BREAKER	01
4	9509218-5	. PLACARD-LH EMERGENCY CIRCUIT BREAKER	01

- ITEM NOT ILLUSTRATED

A93959

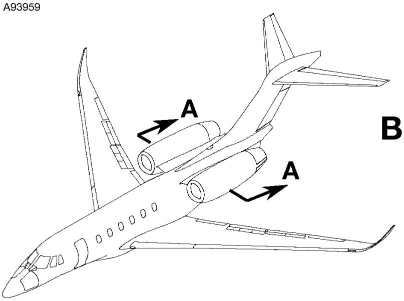

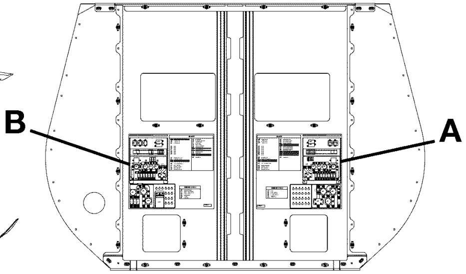

VIEW A–A
View Looking Aft

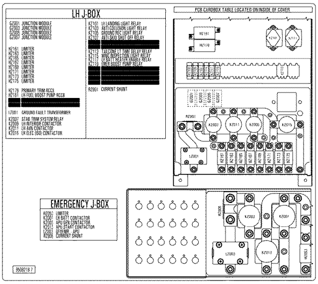

75

DETAIL A

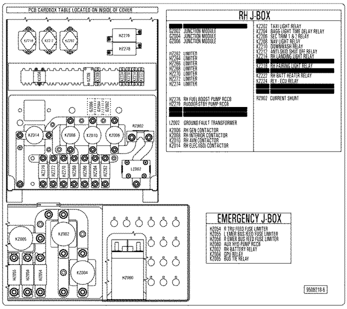

76

DETAIL B

6710T1103
9509218–1

U.S. EXTERIOR PLACARDS AND MARKINGS - MAIN POWER JUNCTION BOX
FIGURE 02 (SHEET 2)

FIG ITEM	PART NUMBER	NOMENCLATURE 1 2 3 4 5 6 7	UNITS PER ASSY
02			
75	9509218-7	. PLACARD-LH JUNCTION BOX	01
76	9509218-6	. PLACARD-RH JUNCTION BOX	01

- ITEM NOT ILLUSTRATED

A93960

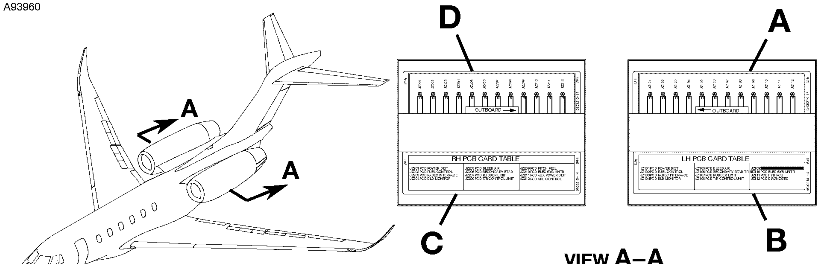

VIEW A–A
Looking Aft at
Inner Covers

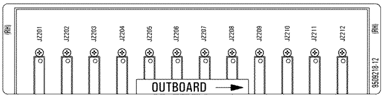

153

DETAIL D
Looking at RH Upper
Inner Cover

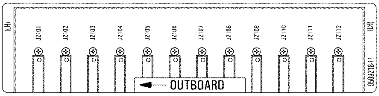

150

DETAIL A
Looking at LH Upper
Inner Cover

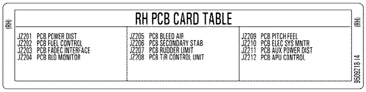

152

DETAIL C
Looking at RH Lower
Inner Cover

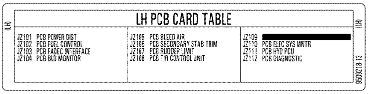

151

DETAIL B
Looking at LH Lower
Inner Cover

6710T1103
9509218-1

U.S. EXTERIOR PLACARDS AND MARKINGS - MAIN POWER JUNCTION BOX
FIGURE 02 (SHEET 3)

FIG ITEM	PART NUMBER	NOMENCLATURE 1 2 3 4 5 6 7	UNITS PER ASSY
02			
150	9509218-11	. PLACARD-LH INNER UPR PRINTED CIRCUIT BOARD	01
151	9509218-13	. PLACARD-LH INNER LWR PRINTED CIRCUIT BOARD	01
152	9509218-14	. PLACARD-RH INNER LWR PRINTED CIRCUIT BOARD	01
153	9509218-12	. PLACARD-RH INNER UPR PRINTED CIRCUIT BOARD	01

- ITEM NOT ILLUSTRATED

A93961

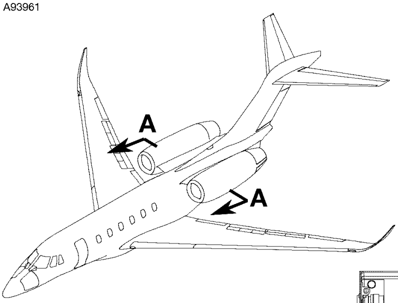

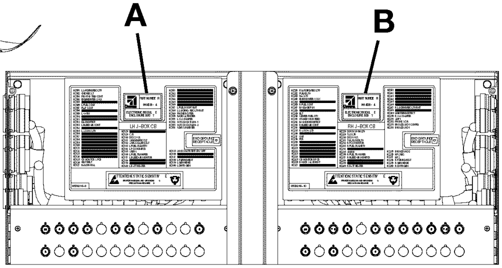

VIEW A–A
Looking Forward
at Outer Covers

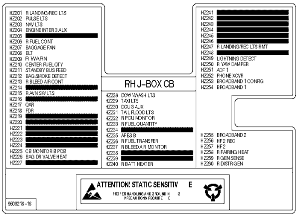

226

DETAIL B
Looking at RH
Outer Cover

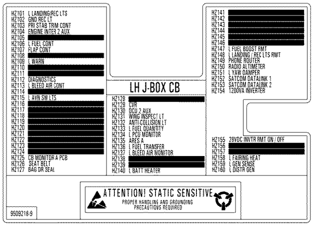

225

DETAIL A
Looking at LH
Outer Cover

6710T1103
9509218–1

U.S. EXTERIOR PLACARDS AND MARKINGS - MAIN POWER JUNCTION BOX
FIGURE 02 (SHEET 4)

FIG ITEM	PART NUMBER	NOMENCLATURE 1 2 3 4 5 6 7	UNITS PER ASSY
02			
225	9509218-9	. PLACARD-LH OUTER PRINTED CIRCUIT BOARD	01
226	9509218-18	. PLACARD-RH OUTER PRINTED CIRCUIT BOARD	01

- ITEM NOT ILLUSTRATED

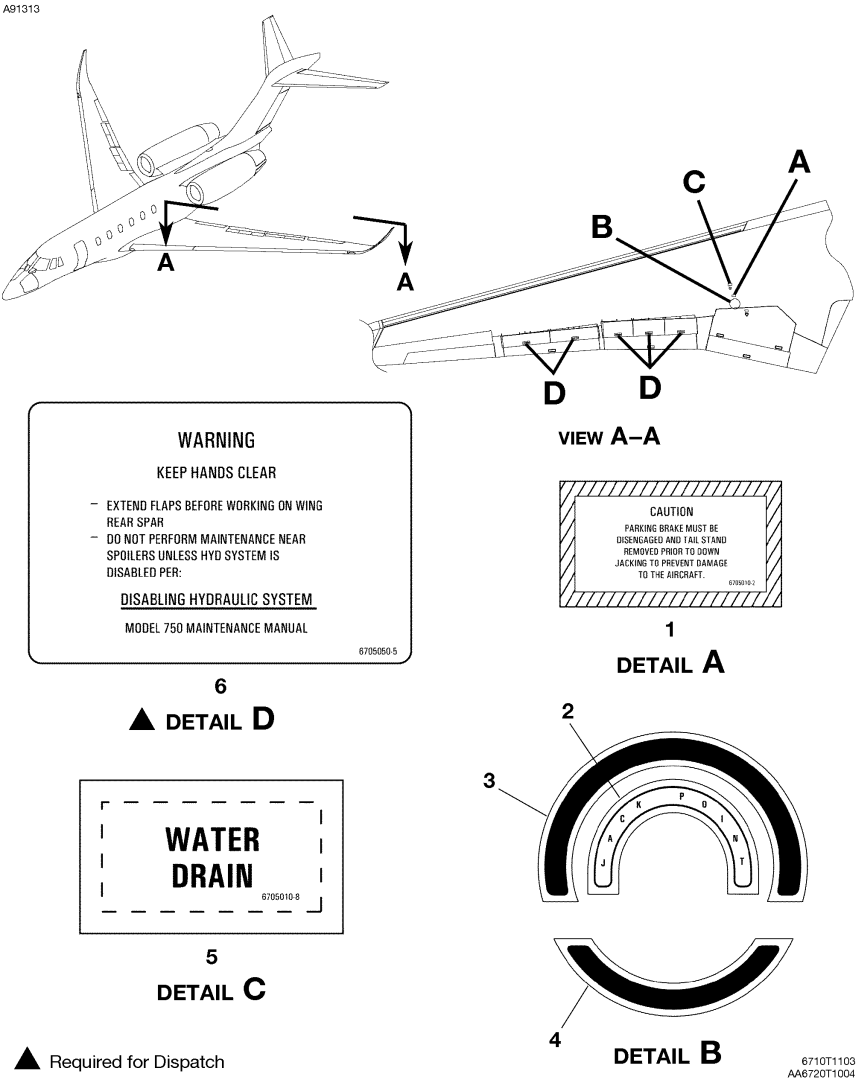

U.S. EXTERIOR PLACARDS AND MARKINGS - WINGS
FIGURE 01 (SHEET 1)

FIG ITEM	PART NUMBER	NOMENCLATURE 1 2 3 4 5 6 7	UNITS PER ASSY
01			
-		U.S. EXTERIOR PLACARDS AND MARKINGS - WINGS	RF
1	6705010-2	. PLACARD-JACK REMOVAL CAUTION.	02
2	6705010-4	. PLACARD-JACK POINT	02
3	6705010-5	. PLACARD-FWD JACK POINT RING	02
4	6705010-6	. PLACARD-AFT JACK POINT RING	02
5	6705010-8	. PLACARD-WATER DRAIN	02
6	6705050-5	. PLACARD-SPOILER WARNING	10

- ITEM NOT ILLUSTRATED

A91314

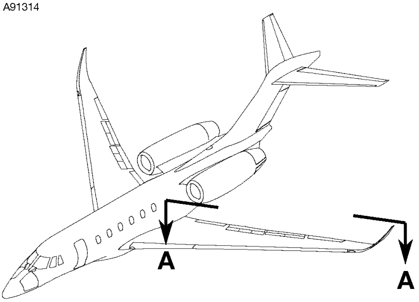

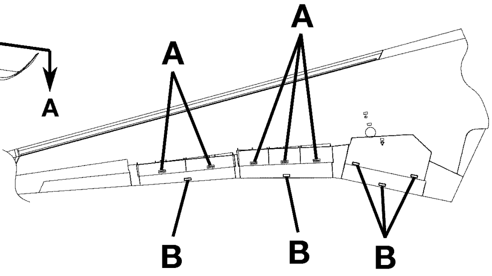

VIEW A–A

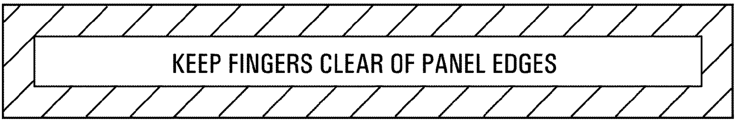

75
DETAIL A

76
DETAIL B

6710T1103
AA6720T1004

U.S. EXTERIOR PLACARDS AND MARKINGS - WINGS
FIGURE 01 (SHEET 2)

FIG ITEM	PART NUMBER	NOMENCLATURE 1 2 3 4 5 6 7	UNITS PER ASSY
01			
75	6705010-3	. PLACARD-KEEP FINGERS CLEAR	10
76	6705010-1	. PLACARD-NO STEP	10

- ITEM NOT ILLUSTRATED

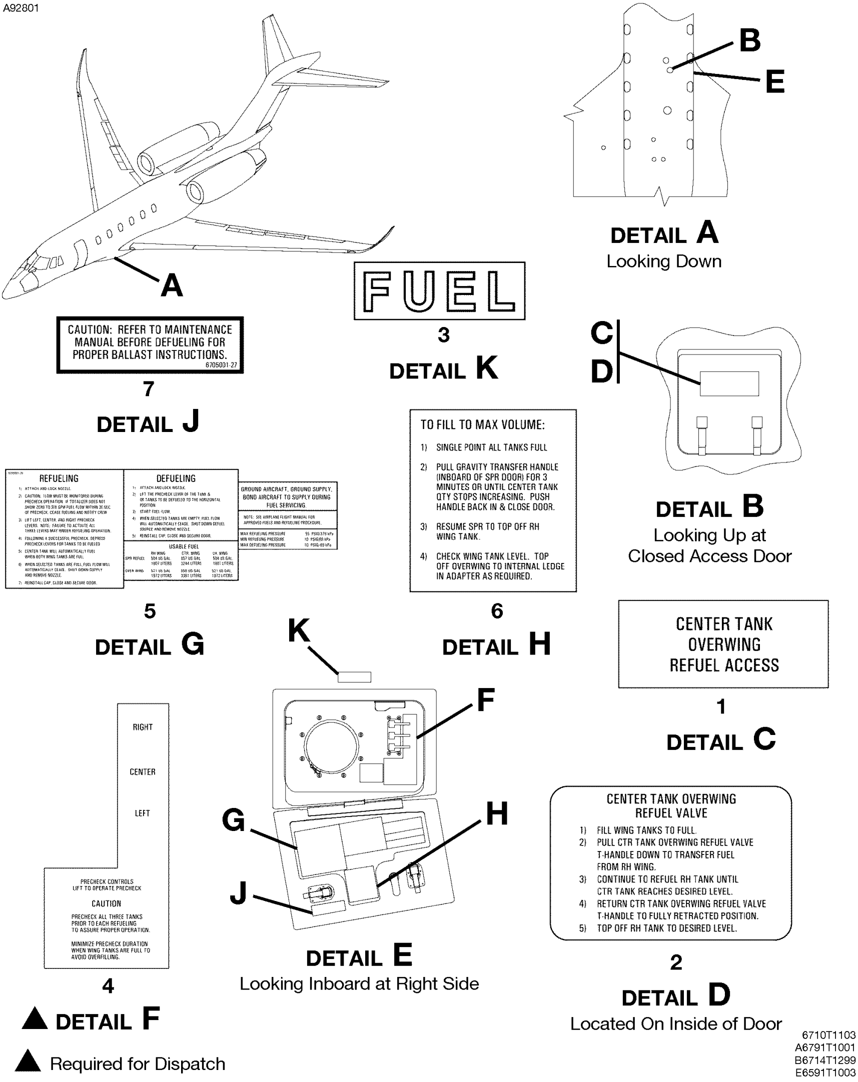

▲ Required for Dispatch

U.S. EXTERIOR PLACARDS AND MARKINGS -FUEL
FIGURE 02 (SHEET 1)

FIG ITEM	PART NUMBER	NOMENCLATURE 1 2 3 4 5 6 7	UNITS PER ASSY
02			
-		U.S. EXTERIOR PLACARDS AND MARKINGS -FUEL	RF
1	6705001-17	. PLACARD-CENTER TANK REFUEL ACCESS	01
2	6705001-7	. PLACARD-CENTER TANK REFUEL INSTRUCTIONS	01
3	6200181-103	. PLACARD-FUEL	01
4	6705001-4	. PLACARD-PRECHECK CONTROLS CAUTION	01
5	6705001-29	. PLACARD-REFUELING INSTRUCTIONS	01
6	6705001-13	. PLACARD-MAX VOLUME FILLING	01
7	6705001-27	. PLACARD-DEFUELING CAUTION	01

- ITEM NOT ILLUSTRATED

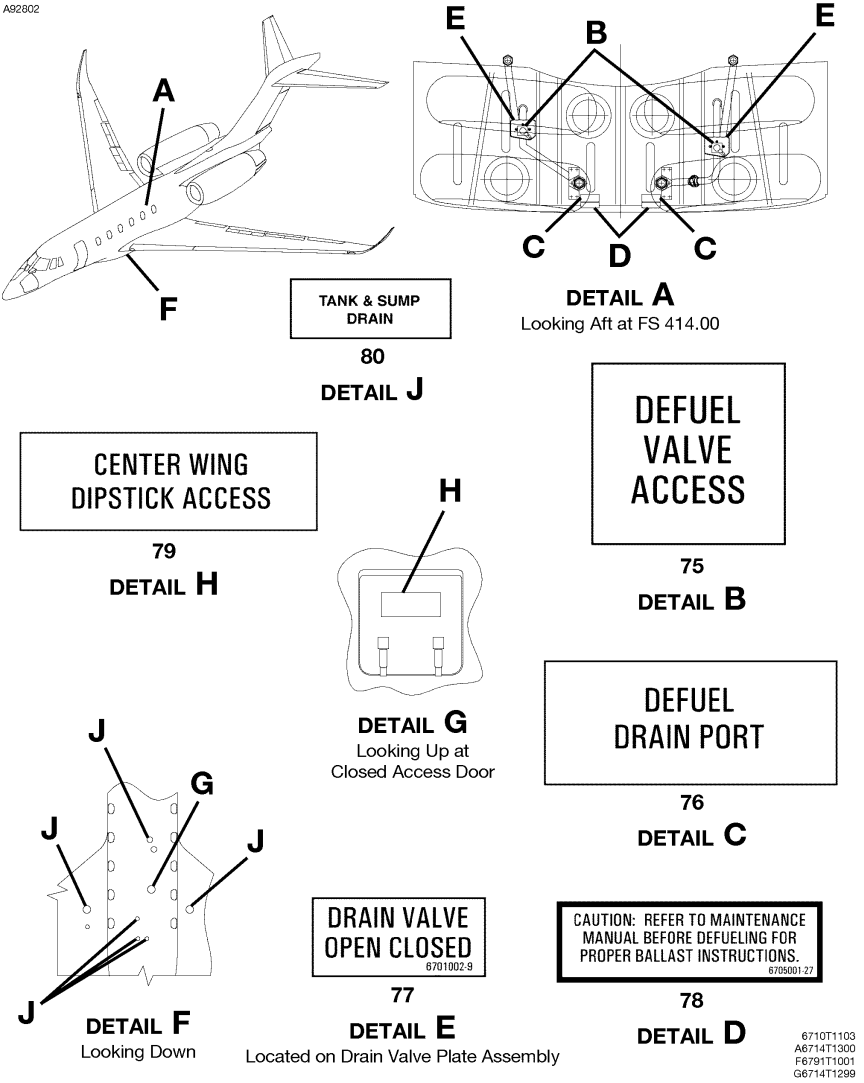

U.S. EXTERIOR PLACARDS AND MARKINGS -FUEL
FIGURE 02 (SHEET 2)

FIG ITEM	PART NUMBER	NOMENCLATURE 1 2 3 4 5 6 7	UNITS PER ASSY
02			
75	6701002-10	. PLACARD-DEFUEL VALVE ACCESS	02
76	6701002-11	. PLACARD-DEFUEL DRAIN PORT	02
77	6701002-9	. PLACARD-DRAIN VALVE OPEN	02
78	6705001-27	. PLACARD-DEFUELING CAUTION	02
79	6705001-5	. PLACARD-DIPSTICK ACCESS	01
80	5550001-9	. PLACARD-TANK AND SUMP DRAIN	06

- ITEM NOT ILLUSTRATED

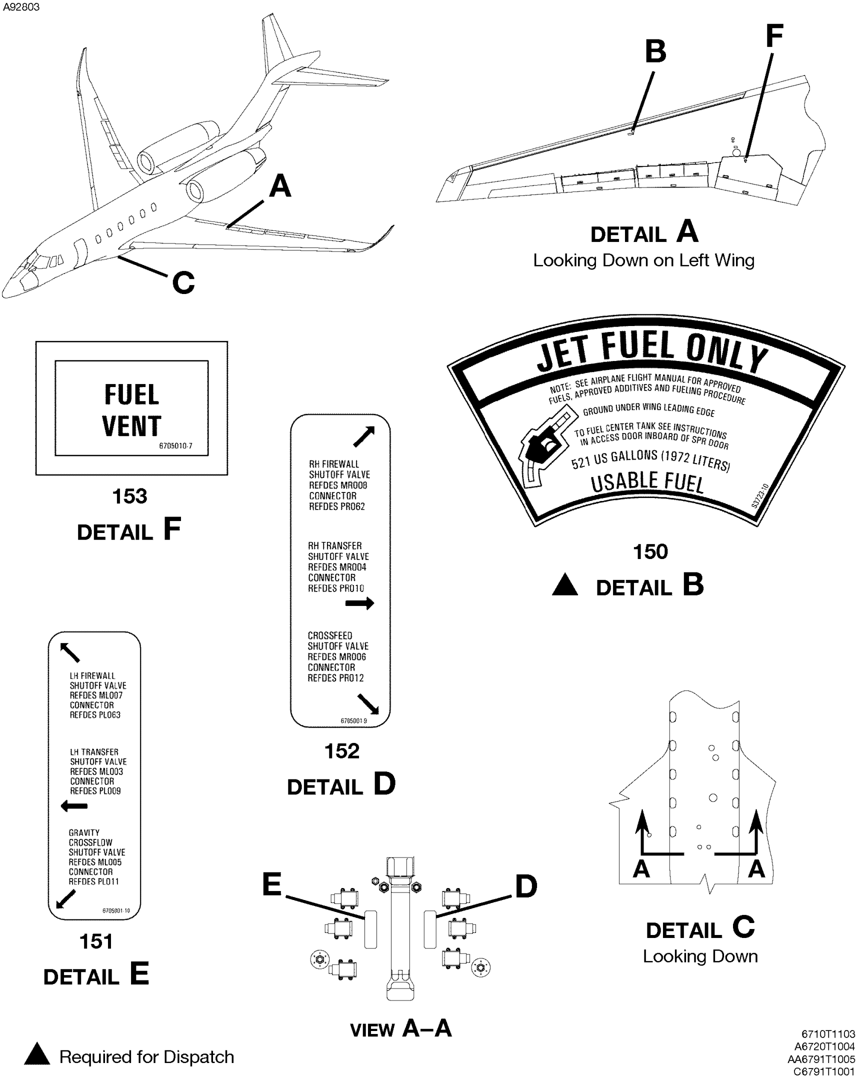

U.S. EXTERIOR PLACARDS AND MARKINGS -FUEL
FIGURE 02 (SHEET 3)

FIG ITEM	PART NUMBER	NOMENCLATURE 1 2 3 4 5 6 7	UNITS PER ASSY
02			
150	S3723-10	. PLACARD-USABLE FUEL	02
151	6705001-10	. PLACARD-LH REAR SPAR INSTRUCTIONS	01
152	6705001-9	. PLACARD-RH REAR SPAR INSTRUCTIONS	01
153	6705010-7	. PLACARD-FUEL VENT	02

- ITEM NOT ILLUSTRATED

A92811

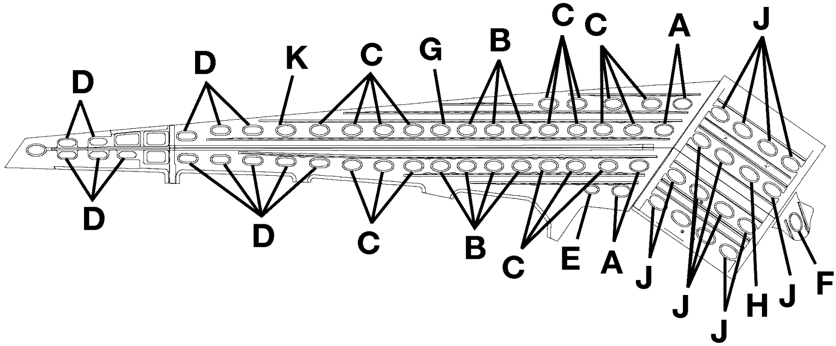

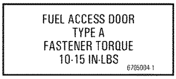

1
DETAIL A

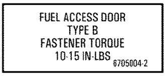

2
DETAIL B

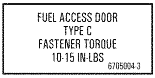

3
DETAIL C

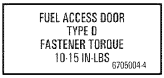

4
DETAIL D

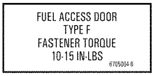

5
DETAIL E

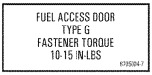

6
DETAIL F

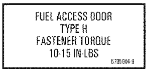

7
DETAIL G

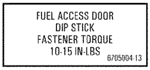

8
DETAIL H

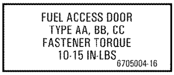

9
DETAIL J

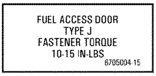

10
DETAIL K

6721T1006

U.S. EXTERIOR PLACARDS AND MARKINGS - WING FUEL ACCESS
FIGURE 03 (SHEET 1)

FIG ITEM	PART NUMBER	NOMENCLATURE 1 2 3 4 5 6 7	UNITS PER ASSY
03			
-		U.S. EXTERIOR PLACARDS AND MARKINGS - WING FUEL ACCESS	RF
1	6705004-1	. PLACARD-FUEL DOOR A LH AND RH	07
2	6705004-2	. PLACARD-FUEL DOOR B LH AND RH	14
3	6705004-3	. PLACARD-FUEL DOOR C LH AND RH	36
4	6705004-4	. PLACARD-FUEL DOOR D LH AND RH	26
5	6705004-6	. PLACARD-FUEL DOOR F LH AND RH	02
6	6705004-7	. PLACARD-FUEL DOOR G LH AND RH	01
7	6705004-8	. PLACARD-FUEL DOOR H LH AND RH	02
8	6705004-13	. PLACARD-FUEL DOOR DIP STICK LH AND RH	01
9	6705004-16	. PLACARD-FUEL DOOR AA, BB, CC LH AND RH	13
10	6705004-15	. SILKSCREEN TYPE J LH AND RH	02

- ITEM NOT ILLUSTRATED

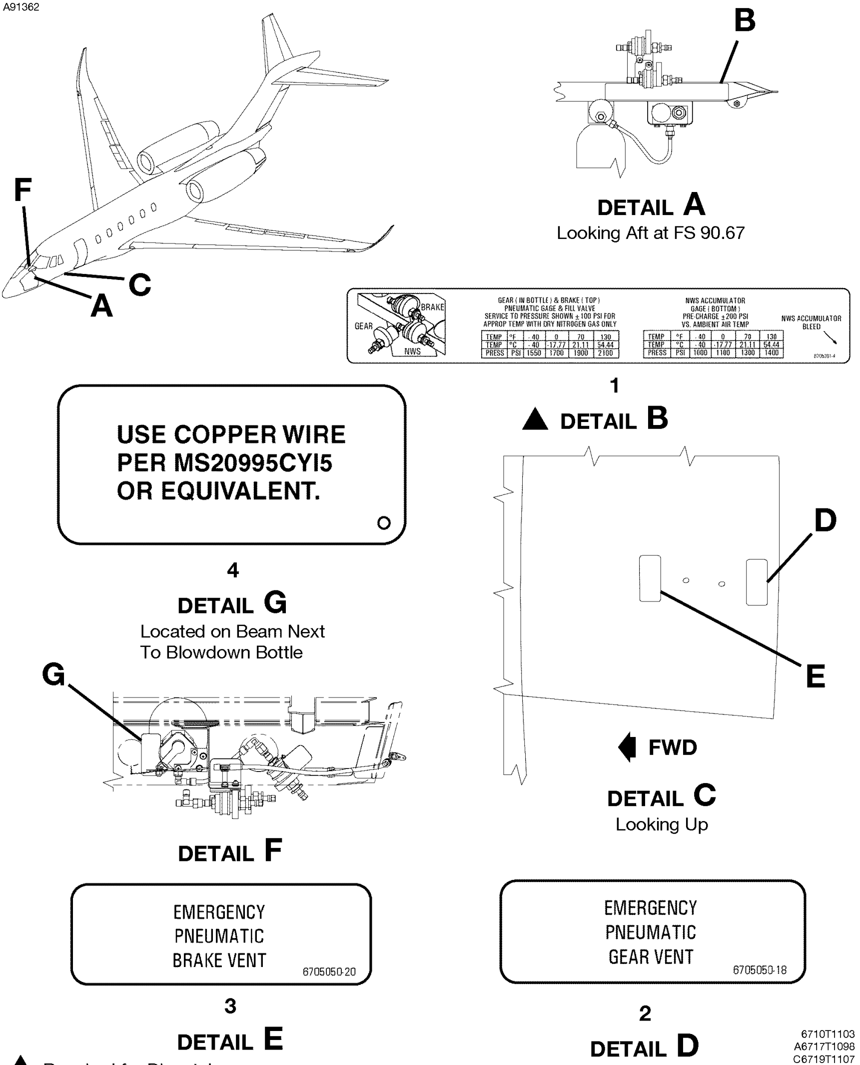

▲ Required for Dispatch

U.S. EXTERIOR PLACARDS AND MARKINGS - NOSE HYDRAULIC SYSTEM
FIGURE 01 (SHEET 1)

FIG ITEM	PART NUMBER	NOMENCLATURE 1 2 3 4 5 6 7	UNITS PER ASSY
01			
-		U.S. EXTERIOR PLACARDS AND MARKINGS - NOSE HYDRAULIC SYSTEM	RF
1	6705261-5	. PLACARD-COMBINED PRE-CHARGE	01
2	6705050-18	. PLACARD-EMERGENCY PNEUMATIC GEAR VENT	01
3	6705050-20	. PLACARD-EMERGENCY PNEUMATIC BRAKE VENT	01
4	5501001-119	. PLACARD-BLOW DOWN BOTTLE	01

- ITEM NOT ILLUSTRATED

A91315

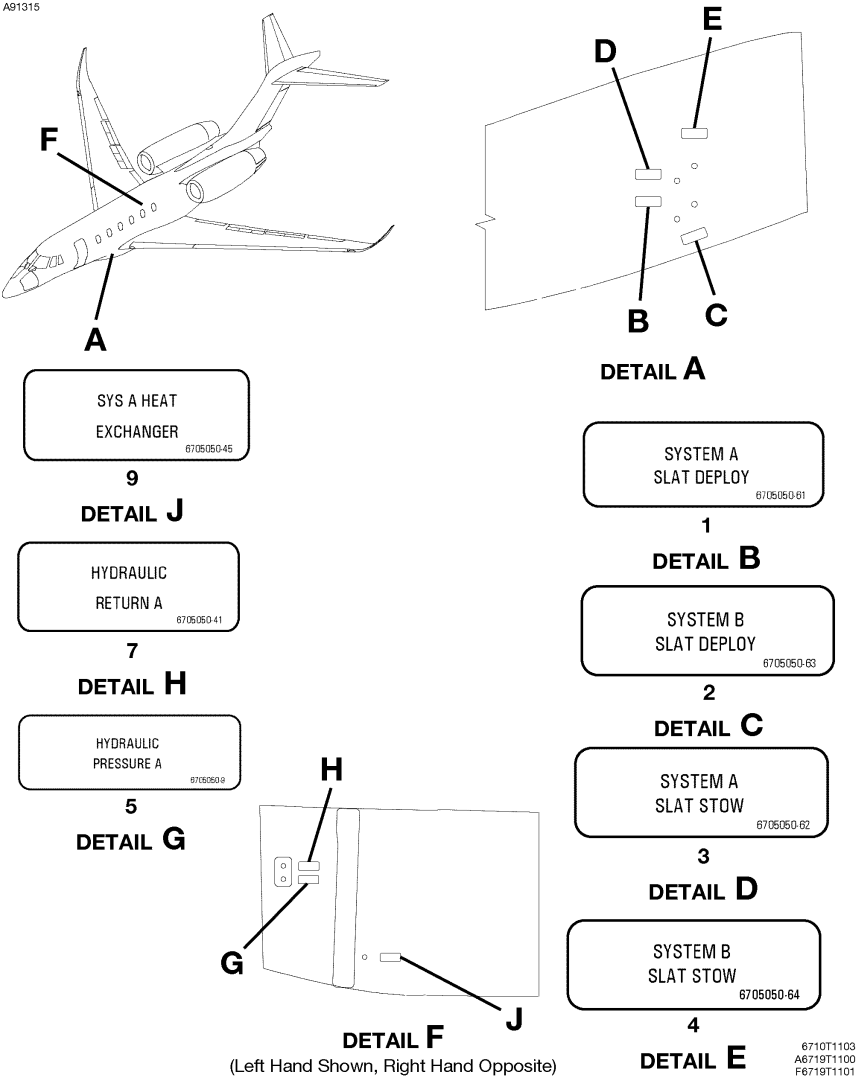

U.S. EXTERIOR PLACARDS AND MARKINGS - FUSELAGE HYDRAULIC SYSTEM
FIGURE 02 (SHEET 1)

FIG ITEM	PART NUMBER	NOMENCLATURE 1 2 3 4 5 6 7	UNITS PER ASSY
02			
-		U.S. EXTERIOR PLACARDS AND MARKINGS - FUSELAGE HYDRAULIC SYSTEM	RF
1	6705050-61	. PLACARD-SYSTEM A SLAT DEPLOY	01
2	6705050-63	. PLACARD-SYSTEM B SLAT DEPLOY	01
3	6705050-62	. PLACARD-SYSTEM A SLAT STOW	01
4	6705050-64	. PLACARD-SYSTEM B SLAT STOW	01
5	6705050-9	. PLACARD-SYSTEM A PRESSURE	01
- 6	6705050-10	. PLACARD-SYSTEM B PRESSURE	01
7	6705050-41	. PLACARD-SYSTEM A RETURN	01
- 8	6705050-40	. PLACARD-SYSTEM B RETURN	01
9	6705050-45	. PLACARD-SYSTEM A HEAT EXCHANGE	01
- 10	6705050-44	. PLACARD-SYSTEM B HEAT EXCHANGE	01

- ITEM NOT ILLUSTRATED

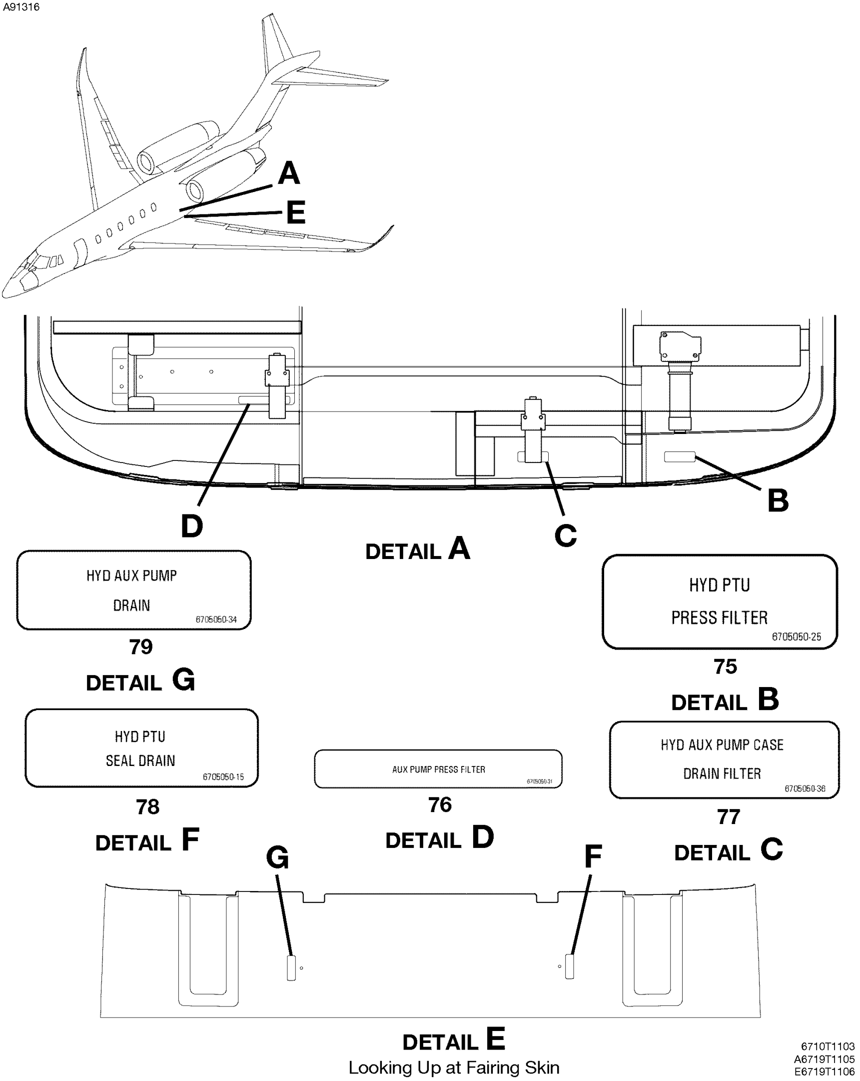

U.S. EXTERIOR PLACARDS AND MARKINGS - FUSELAGE HYDRAULIC SYSTEM
FIGURE 02 (SHEET 2)

FIG ITEM	PART NUMBER	NOMENCLATURE 1 2 3 4 5 6 7	UNITS PER ASSY
02			
75	6705050-25	. PLACARD-PTU PRESS FILTER	01
76	6705050-32	. PLACARD-AUX PUMP PRESS FILTER	01
77	6705050-36	. PLACARD-AUX PUMP DRAIN FILTER	01
78	6705050-15	. PLACARD-PTU SEAL DRAIN	01
79	6705050-34	. PLACARD-AUX PUMP DRAIN	01

- ITEM NOT ILLUSTRATED

A92807

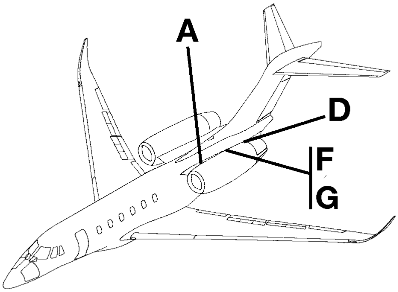

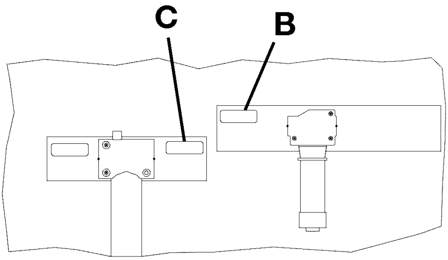

DETAIL A
Looking Inboard At FS 511.30

HYD SYS A
PRESSURE FILTER
6705050-17

1
DETAIL B

CAUTION
PULL A AUX HYDR PUMP AND
HYDR B/PTU CONT CIRCUIT BREAKERS
WHEN HYDRAULIC SERVICE
CART IS CONNECTED
SERVICE SYSTEM A RESERVOIR PER:
HYDRAULIC SYSTEM SERVICING
MODEL 750 MAINTENANCE MANUAL
6705050-75

7
DETAIL F
Located On Inside Of
Ground Service Door

HYD GROUND
SERVICE ACCESS
6705050-38

9
DETAIL G
Located On Outside Of
Ground Service Door

HYD SYS A
RETURN FILTER
6705050-19

3
DETAIL C

HYD SYS A
OVERBOARD
6705050-43

5
DETAIL E

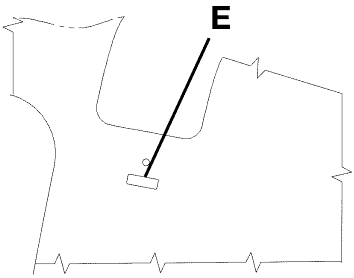

DETAIL D
Looking Up At Fairing Skin
(Left Hand Shown,
Right Hand Opposite)

6710T1001
A6719T1110
D6719T1111

U.S. EXTERIOR PLACARDS AND MARKINGS - EMPENNAGE HYDRAULIC SYSTEM
FIGURE 03 (SHEET 1)

FIG ITEM	PART NUMBER	NOMENCLATURE 1 2 3 4 5 6 7	UNITS PER ASSY
03			
-		U.S. EXTERIOR PLACARDS AND MARKINGS - EMPENNAGE HYDRAULIC SYSTEM	RF
1	6705050-17	. PLACARD-SYSTEM A PRESS FILTER	01
- 2	6705050-16	. PLACARD-SYSTEM B PRESS FILTER	01
3	6705050-19	. PLACARD-SYSTEM A RETURN FILTER	01
- 4	6705050-30	. PLACARD-SYSTEM B RETURN FILTER	01
5	6705050-43	. PLACARD-SYSTEM A OVERBOARD	01
- 6	6705050-42	. PLACARD-SYSTEM B OVERBOARD	01
7	6705050-75	. PLACARD-SYSTEM A PTU WARNING	01
- 8	6705050-74	. PLACARD-SYSTEM B PTU WARNING	01
9	6705050-38	. PLACARD-GROUND SERVICE ACCESS	02

- ITEM NOT ILLUSTRATED

A92808

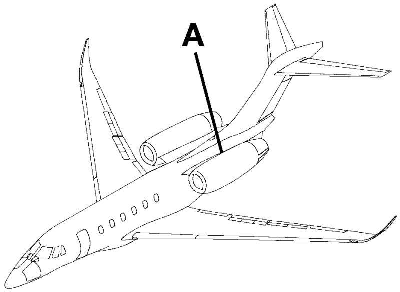

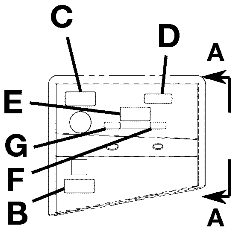

DETAIL A
Looking Inboard At
Ground Service Door
(Left Hand Shown,
Right Hand Opposite)

HYDRAULIC
RETURN A
6705050-41

84
DETAIL G

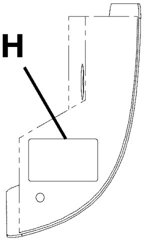

VIEW A–A

RESERVOIR MANUAL FILL PORT
- FILL TO FULL (0 PSI)
- USE AS1241 TYPE IV PHOSPHATE ESTER OIL
- MANUALLY SERVICE PER:

MANUALLY SERVICING RESERVOIR
MODEL 750 MAINTENANCE MANUAL
6705050-83

78
DETAIL H

HYDRAULIC
PRESSURE A
6705050-9

82
DETAIL F

RESERVOIR FILL VALVE
SERVICE RESERVOIR WITH
SYSTEM PRESSURE AT
3000 PSI.
FILL TO 'FULL (3000 PSI)
6705050-12

75
DETAIL B

HYD SYS A GROUND
SERVICE CONNECTIONS
USE AS1241 TYPE IV
PHOSPHATE ESTER FLUID ONLY
6705050-7

80
DETAIL E

RESERVOIR
BLEED CABLE
PULL TO BLEED
6705050-11

79
DETAIL D

SYSTEM A ACCUMULATOR
GAGE
PRE-CHARGE ± 200 PSI
VS. AMBIENT AIR TEMP

TEMP °F	-40	0	70	130
TEMP °C	-40	-17.77	21.11	54.44
PRESS PSI	1000	1100	1300	1400

76
▲ **DETAIL C**

▲ REQUIRED FOR DISPATCH

6710T1001
A6750T1008
AA6750T1009

U.S. EXTERIOR PLACARDS AND MARKINGS - EMPENNAGE HYDRAULIC SYSTEM
FIGURE 03 (SHEET 2)

FIG ITEM	PART NUMBER	NOMENCLATURE 1 2 3 4 5 6 7	UNITS PER ASSY
03			
75	6705050-12	. PLACARD-RESERVOIR FILL VALVE	02
76	6705261-1	. PLACARD-SYSTEM A ACCUMULATOR GAGE	01
- 77	6705261-2	. PLACARD-SYSTEM B ACCUMULATOR GAGE	01
78	6705050-83	. PLACARD-RESERVOIR MANUAL FILL PORT	02
79	6705050-11	. PLACARD-RESERVOIR BLEED CABLE	02
80	6705050-7	. PLACARD-SYSTEM A SERVICE CONNECTIONS	01
- 81	6705050-14	. PLACARD-SYSTEM B SERVICE CONNECTIONS	01
82	6705050-9	. PLACARD-SYSTEM A PRESSURE	01
- 83	6705050-10	. PLACARD-SYSTEM B PRESSURE	01
84	6705050-41	. PLACARD-SYSTEM A RETURN	01
- 85	6705050-40	. PLACARD-SYSTEM B RETURN	01

- ITEM NOT ILLUSTRATED

A92814

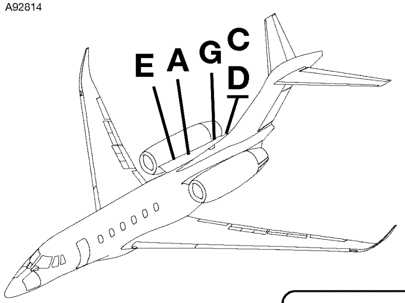

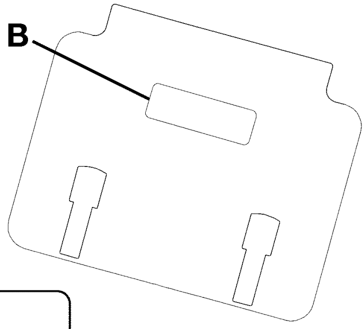

DETAIL A
Looking Up at Pylon Access Door

HYD RUDDER
STANDBY FILTER
6705050-39

6

DETAIL J

WARNING
TRAPPED PRESSURE MAY EXIST WITHIN THE RUDDER STAND-BY SYSTEM
- BLEED THE ACCUMULATOR USING THE MANUAL BLEED VALVE
- RELIEVE PRESURE FROM RUDDER STAND-BY RESERVOIR USING RS PUMP PER:
RELEASE RUDDER STANDBY
RESERVOIR PRESSURE
MODEL 750 MAINTENANCE MANUAL

5

DETAIL H

HYD RESERVOIR
ACCESS
6705050-36

1

DETAIL B

HYD RUDDER
STANDBY ACCESS
6705050-71

7

DETAIL C
Located On Inside of Rudder Standby Access Door

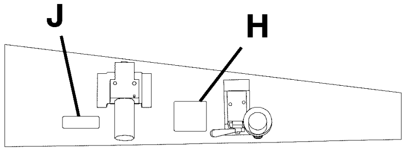

DETAIL G
Looking Outboard at Right Hand Pylon

RUDDER STANDBY
ACCUMULATOR
PRE-CHARGE ±100 PSI
VS. AMBIENT AIR TEMP

TEMP °F	-40	0	70	130
PRESS-PSI	1600	1750	2000	2250

4

▲ **DETAIL D**
Located On Outside of Rudder Standby Access Door

HYD SYS B CASE
DRAIN FILTER
6705050-33

3

DETAIL F

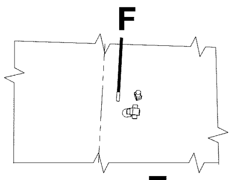

DETAIL E
Looking Up at Right Hand Pylon

▲ Required for Dispatch

6710T1103

U.S. EXTERIOR PLACARDS AND MARKINGS - PYLONS HYDRAULIC SYSTEM
FIGURE 04 (SHEET 1)

FIG ITEM	PART NUMBER	NOMENCLATURE 1 2 3 4 5 6 7	UNITS PER ASSY
04			
-		U.S. EXTERIOR PLACARDS AND MARKINGS - PYLONS HYDRAULIC SYSTEM	RF
1	6705050-35	. PLACARD-RESERVOIR ACCESS	02
- 2	6705050-31	. PLACARD-SYSTEM A CASE DRAIN FILTER	01
3	6705050-33	. PLACARD-SYSTEM B CASE DRAIN FILTER	01
4	6705261-3	. PLACARD-RUDDER STANDBY	01
5	6705050-65	. PLACARD-RUDDER WARNING	01
6	6705050-39	. PLACARD-RUDDER STANDBY FILTER	01
7	6705050-71	. DECAL-RUDDER STANDBY ACCESS	01

- ITEM NOT ILLUSTRATED

A92812

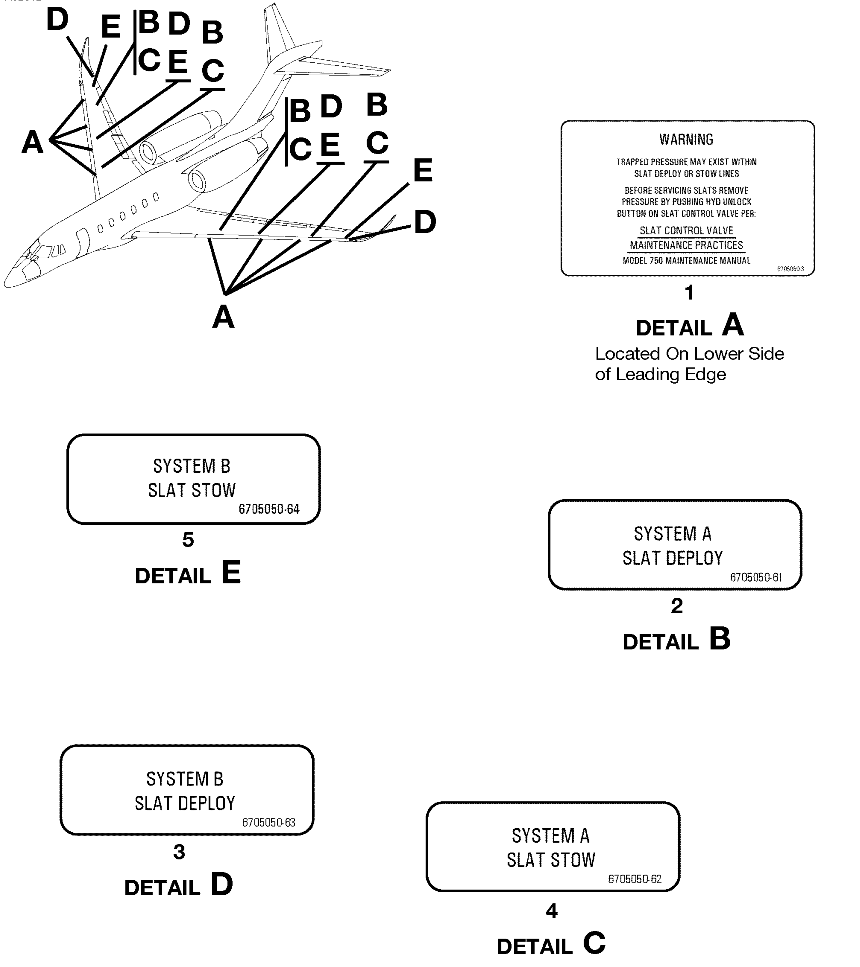

6710T1103

U.S. EXTERIOR PLACARDS AND MARKINGS - WINGS HYDRAULIC SYSTEM
FIGURE 05 (SHEET 1)

FIG ITEM	PART NUMBER	NOMENCLATURE 1 2 3 4 5 6 7	UNITS PER ASSY
05			
-		U.S. EXTERIOR PLACARDS AND MARKINGS - WINGS HYDRAULIC SYSTEM	RF
1	6705050-3	. PLACARD-SLAT WARNING	08
2	6705050-61	. PLACARD-SYSTEM A SLAT DEPLOY	04
3	6705050-63	. PLACARD-SYSTEM B SLAT DEPLOY	04
4	6705050-62	. PLACARD-SYSTEM A SLAT STOW	04
5	6705050-64	. PLACARD-SYSTEM B SLAT STOW	04

- ITEM NOT ILLUSTRATED

A92813

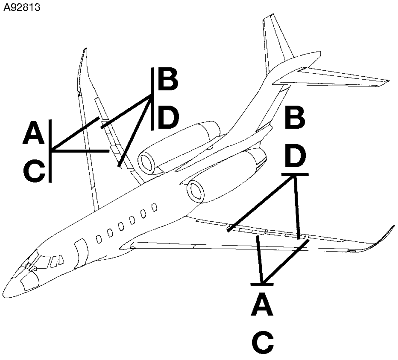

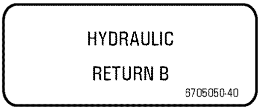

78
DETAIL D

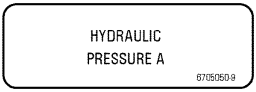

75
DETAIL A

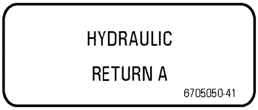

77
DETAIL C

76
DETAIL B

6710T1103

U.S. EXTERIOR PLACARDS AND MARKINGS - WINGS HYDRAULIC SYSTEM
FIGURE 05 (SHEET 2)

FIG ITEM	PART NUMBER	NOMENCLATURE 1 2 3 4 5 6 7	UNITS PER ASSY
05			
75	6705050-9	. PLACARD-SYSTEM A PRESSURE	04
76	6705050-10	. PLACARD-SYSTEM B PRESSURE	04
77	6705050-41	. PLACARD-SYSTEM A RETURN	04
78	6705050-40	. PLACARD-SYSTEM B RETURN	04

- ITEM NOT ILLUSTRATED

A92820

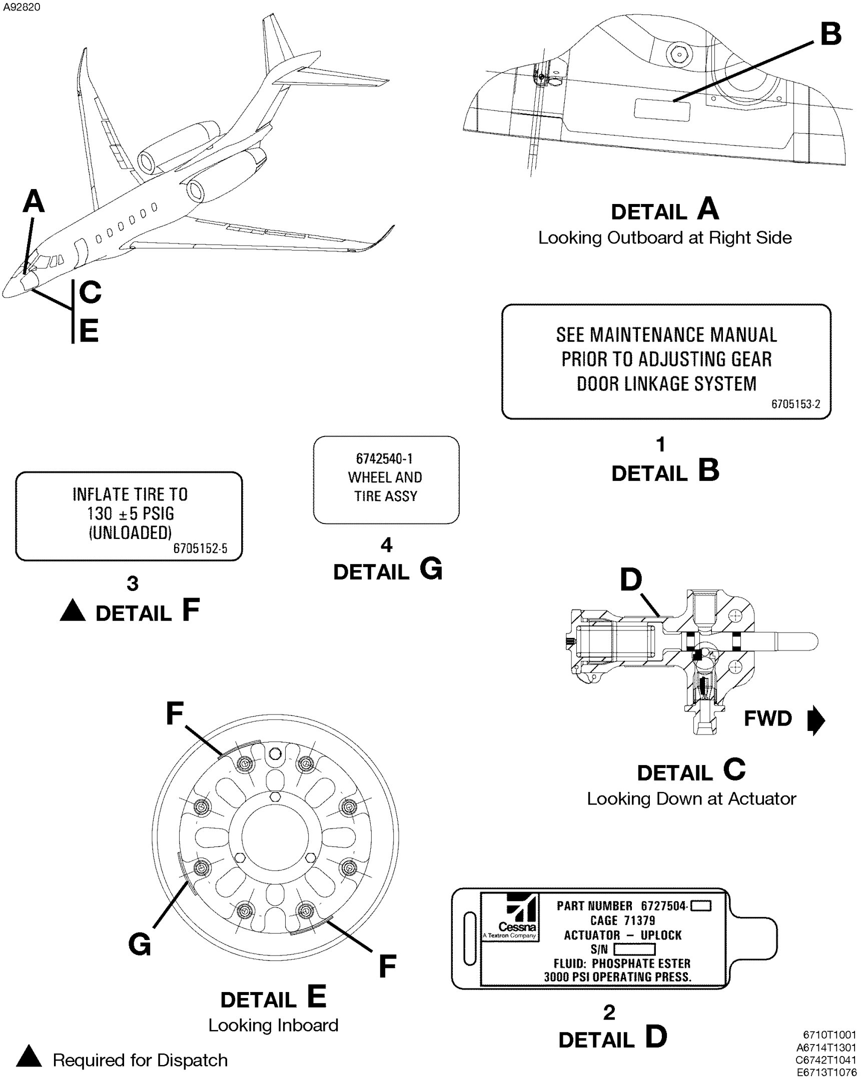

U.S. EXTERIOR PLACARDS AND MARKINGS - NOSE LANDING GEAR
FIGURE 01 (SHEET 1)

FIG ITEM	PART NUMBER	NOMENCLATURE 1 2 3 4 5 6 7	UNITS PER ASSY
01			
-		U.S. EXTERIOR PLACARDS AND MARKINGS - NOSE LANDING GEAR	RF
1	6705153-2	. PLACARD-GEAR DOOR LINKAGE ADJUSTMENT	02
2	6727405-7	. NAMEPLATE-ACTUATOR UPLOCK	01
3	6705361-5	. PLACARD-TIRE INFLATION	02
4	6705157-1	. PLACARD-NLG WHEEL AND TIRE ID	01
- 5	6705157-2	. PLACARD-NLG WHEEL AND TIRE ID WHITE	01

- ITEM NOT ILLUSTRATED

A92821

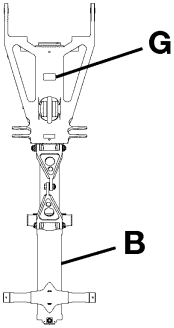

DETAIL A
Looking Aft

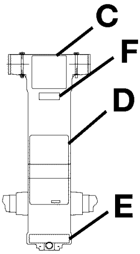

DETAIL B

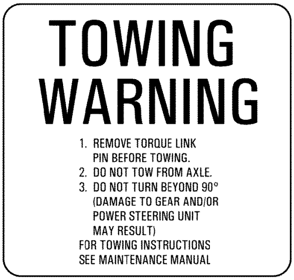

78
▲ **DETAIL C**

76
DETAIL D

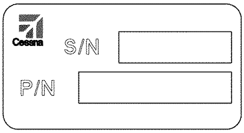

77
DETAIL G

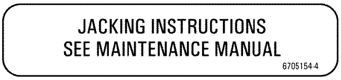

75
DETAIL E

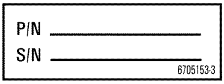

79
DETAIL F

▲ Required for Dispatch

A6713T1040
B6742T1056

U.S. EXTERIOR PLACARDS AND MARKINGS - NOSE LANDING GEAR
FIGURE 01 (SHEET 2)

FIG ITEM	PART NUMBER	NOMENCLATURE 1 2 3 4 5 6 7	UNITS PER ASSY
01			
75	6705154-4	. PLACARD-JACKING INSTRUCTIONS	01
76	6940002-1	. PLACARD-OLEO SERVICE INSTRUCTIONS	01
77	6940002-8	. PLACARD-LANDING GEAR ID REFER TO NOTE 1	01
78	6705153-4	. PLACARD-TOWING WARNING	01
79	6705153-3	. PLACARD-SERIAL/PART NUMBER PLATE	02

NOTE 1—WHEN ORDERING THIS PART, THE OWNER MUST SEND A NOTARIZED DOCUMENT STATING THE REASON FOR ORDERING A NEW ID PLATE, TYPE CERTIFICATE NUMBER, PRODUCTION CERTIFICATE NUMBER, ID PLATE NUMBER AND MODEL NUMBER. THE OLD ID PLATE FROM THE AIRPLANE SHOULD BE ATTACHED TO THE ORDER, IF AVAILABLE. IF NOT ATTACHED, THE NEW PLATE WILL BE STAMPED DUPLICATE.

- ITEM NOT ILLUSTRATED

A92826

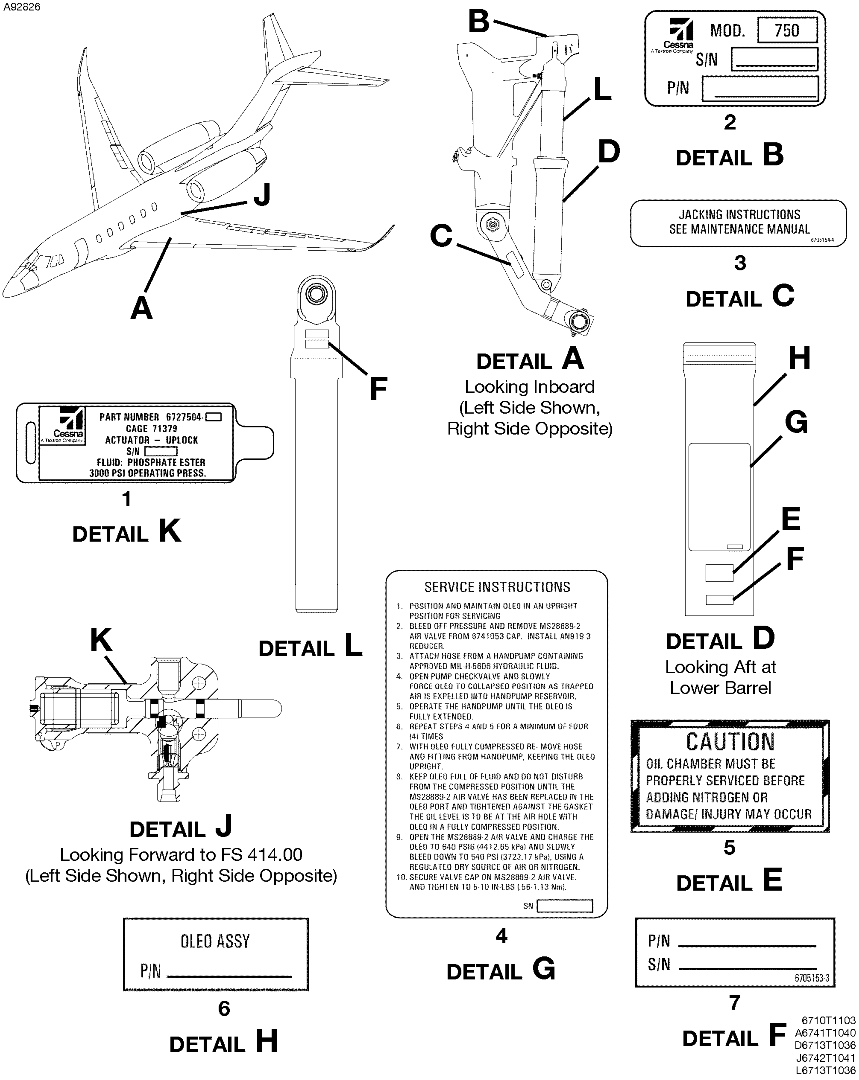

U.S. EXTERIOR PLACARDS AND MARKINGS - MAIN LANDING GEAR
FIGURE 02 (SHEET 1)

FIG ITEM	PART NUMBER	NOMENCLATURE 1 2 3 4 5 6 7			UNITS PER ASSY
02					
-		U.S. EXTERIOR PLACARDS AND MARKINGS - MAIN LANDING GEAR			RF
1	6727405-7	. NAMEPLATE-ACTUATOR UPLOCK	0501	0521	02 R
- 1A	6747006-1	. NAMEPLATE-ACTUATOR UPLOCK	0522	& ON	02 R
2	6705154-2	. IDENTIFICATION PLATE-REFER TO NOTE 1			02
3	6705154-4	. PLACARD-JACKING INSTRUCTIONS			02
4	6705156-4	. PLACARD-OLEO SERVICE INSTRUCTIONS			02
5	6705156-1	. PLACARD-OLEO SERVICE CAUTION			02
6	6705156-2	. PLACARD-PART NUMBER			02
7	6705153-3	. PLACARD-SERIAL/PART NUMBER PLATE			AR

NOTE 1—WHEN ORDERING THIS PART, THE OWNER MUST SEND A NOTARIZED DOCUMENT STATING THE REASON FOR ORDERING A NEW ID PLATE, TYPE CERTIFICATE NUMBER, PRODUCTION CERTIFICATE NUMBER, ID PLATE NUMBER AND MODEL NUMBER. THE OLD ID PLATE FROM THE AIRPLANE SHOULD BE ATTACHED TO THE ORDER, IF AVAILABLE. IF NOT ATTACHED, THE NEW PLATE WILL BE STAMPED DUPLICATE.

- ITEM NOT ILLUSTRATED

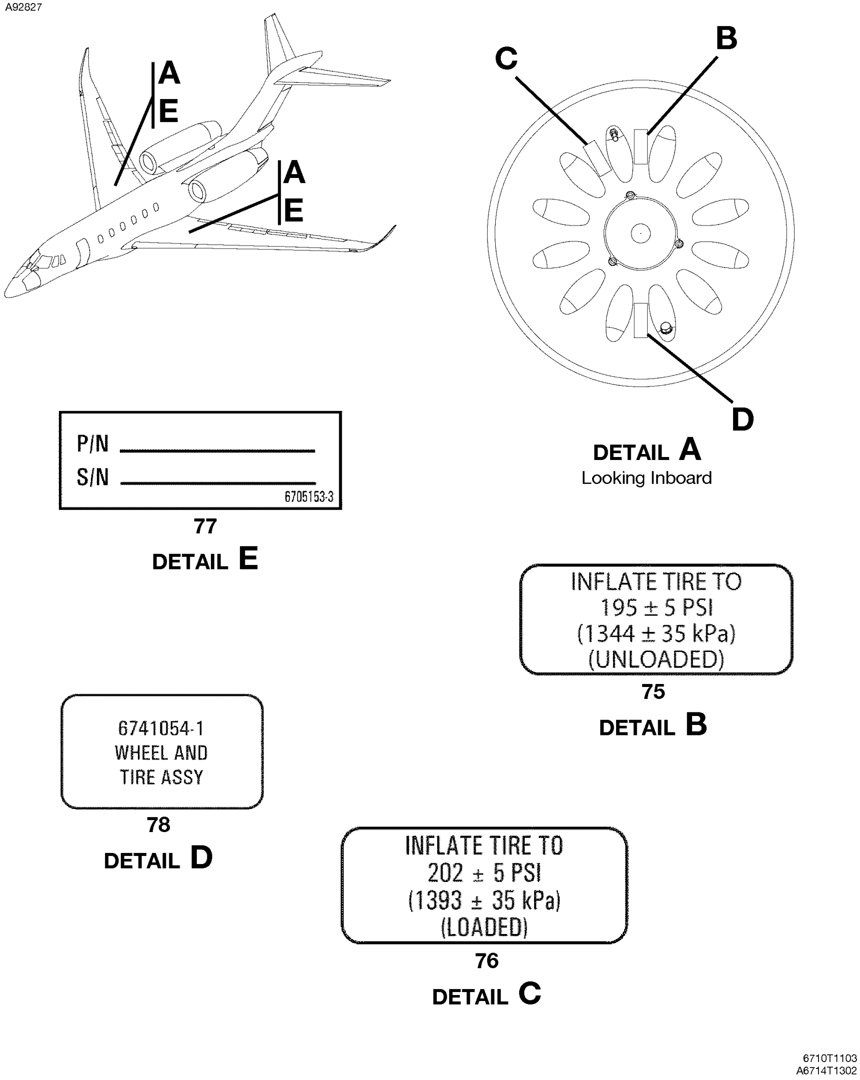

U.S. EXTERIOR PLACARDS AND MARKINGS - MAIN LANDING GEAR
FIGURE 02 (SHEET 2)

FIG ITEM	PART NUMBER	NOMENCLATURE 1 2 3 4 5 6 7	UNITS PER ASSY
02			
75	6705362-1	. PLACARD-TIRE INFLATION UNLOADED	04
76	6705362-2	. PLACARD-TIRE INFLATION LOADED	04
77	6705153-3	. PLACARD-OLEO PART NUMBER	02
78	6705362-5	. PLACARD-WHEEL AND TIRE ASSY GRAY WHEEL	04
- 79	6705362-6	. PLACARD-WHEEL AND TIRE ASSY WHITE WHEEL	04

- ITEM NOT ILLUSTRATED

A89337

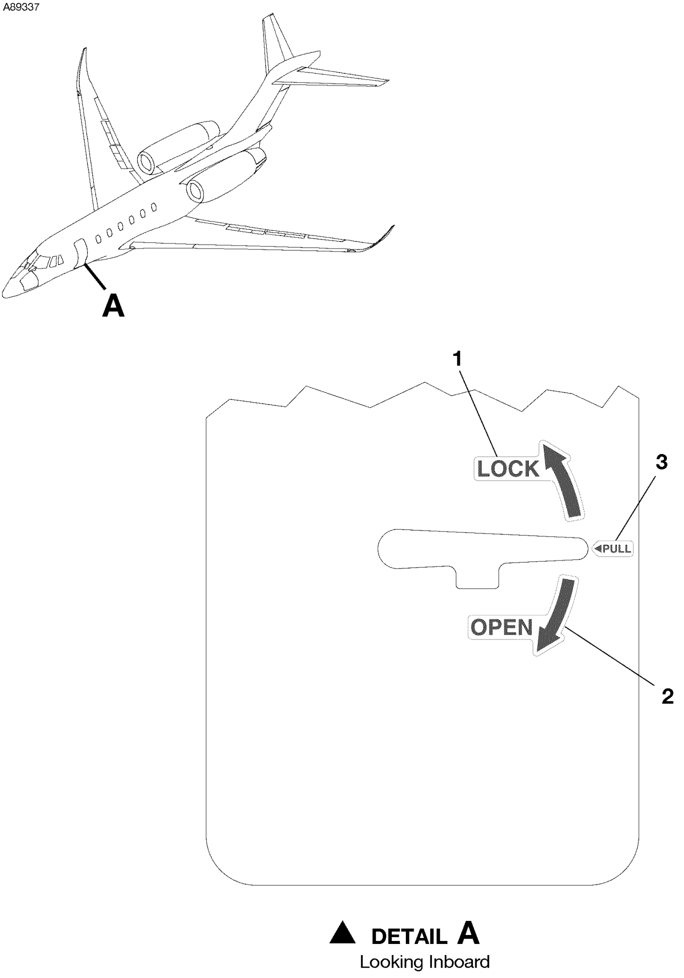

▲ Required for Dispatch

6710T1103
A6714T1265

U.S. EXTERIOR PLACARDS AND MARKINGS - ENTRANCE DOOR
FIGURE 01 (SHEET 1)

FIG ITEM	PART NUMBER	NOMENCLATURE 1 2 3 4 5 6 7	UNITS PER ASSY
01			
-		U.S. EXTERIOR PLACARDS AND MARKINGS - ENTRANCE DOOR	RF
1	4416000-108	. DECAL-CABIN DOOR(LOCK)	01
2	4416000-111	. DECAL-CABIN DOOR(OPEN)	01
3	4416000-114	. DECAL-CABIN DOOR(PULL)	01

- ITEM NOT ILLUSTRATED

A87832

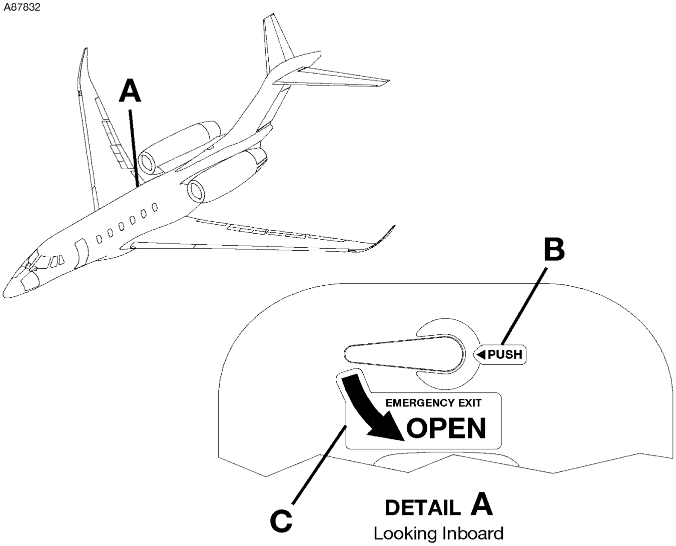

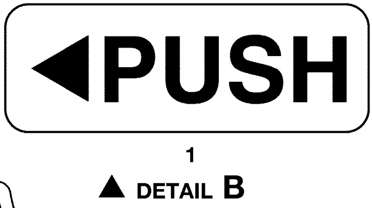

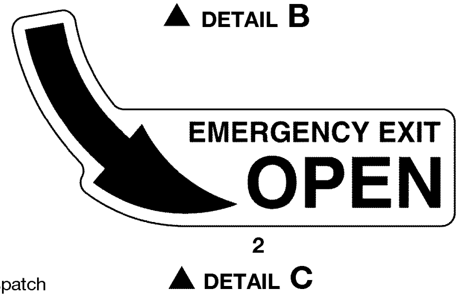

▲ Required for Dispatch

6710T1103
6714T1266

U.S. EXTERIOR PLACARDS AND MARKINGS - EMERGENCY EXIT DOOR
FIGURE 02 (SHEET 1)

FIG ITEM	PART NUMBER	NOMENCLATURE 1 2 3 4 5 6 7	UNITS PER ASSY
02			
-		U.S. EXTERIOR PLACARDS AND MARKINGS - EMERGENCY EXIT DOOR	RF
1	4416000-102	. DECAL-PUSH	01
2	4416000-105	. DECAL-OPEN	01

- ITEM NOT ILLUSTRATED

A89354

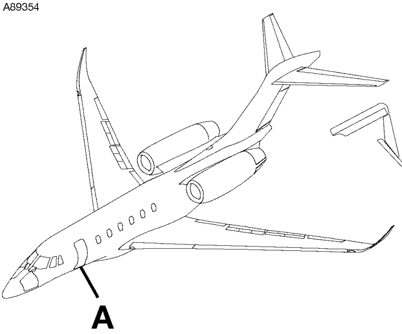

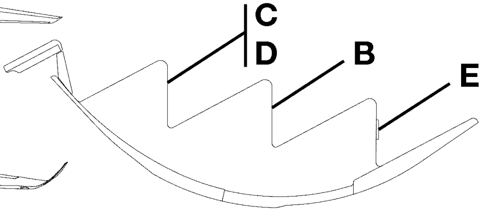

DETAIL A
Looking Aft at Steps in Open Position

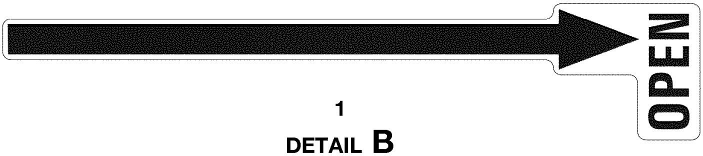

1
DETAIL B

2
DETAIL E

3
DETAIL C

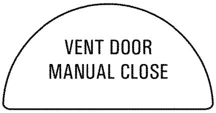

4
DETAIL D

6710T1103
6713T1073

U.S. EXTERIOR PLACARDS AND MARKINGS - ENTRANCE DOOR STEPS
FIGURE 03 (SHEET 1)

FIG ITEM	PART NUMBER	NOMENCLATURE 1 2 3 4 5 6 7	UNITS PER ASSY
03			
-		U.S. EXTERIOR PLACARDS AND MARKINGS - ENTRANCE DOOR STEPS	RF
1	4416004-99	. DECAL-OPEN ARROW	01
2	4416004-17	. PLACARD-PRECATCH RELEASE	01
3	4416004-184	. PLACARD-LWR DOOR VENT	01
4	4416004-187	. PLACARD-UPR DOOR VENT	01

- ITEM NOT ILLUSTRATED

A89353

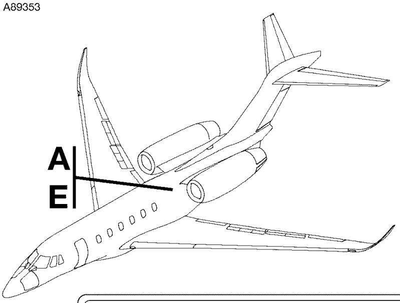

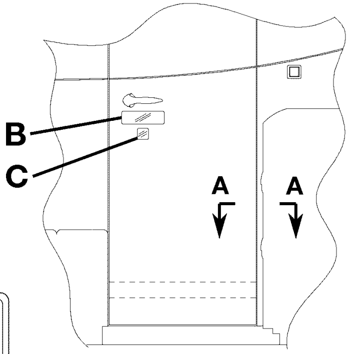

DETAIL A
Looking Aft at Closet Door

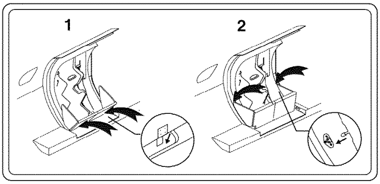

1
DETAIL F

WATER BARRIER
INSIDE CLOSET.

2
DETAIL B

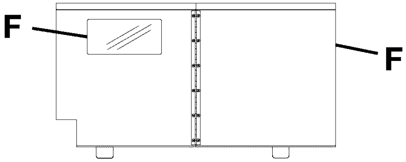

DETAIL E
Looking at Water Barrier in Open Position

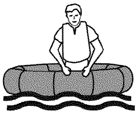

5
DETAIL C

LIFT LID TO ACCESS
INTERIOR J-BOX.

4
DETAIL D

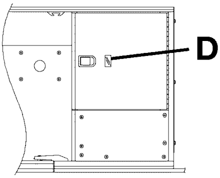

VIEW A–A
Looking Down at Shelf

6710T1103
6719T1109

U.S. INTERIOR PLACARDS AND MARKINGS-AFT CLOSET
FIGURE 03 (SHEET 1)

FIG ITEM	PART NUMBER	NOMENCLATURE 1 2 3 4 5 6 7	UNITS PER ASSY
03			
-		U.S. INTERIOR PLACARDS AND MARKINGS-AFT CLOSET	RF
1	6505010-54	. PLACARD-WATER BARRIER INSTRUCTIONS	01
2	4416000-145	. SILKSCREEN-WATER BARRIER LOCATOR FSO 4416000-146 REFER TO NOTE 1.	NP
- 3	4416000-146	. PLACARD-WATER BARRIER LOCATOR REFER TO NOTE 2	01
4	4416004-144	. SILKSCREEN-J-BOX ACCESS REFER TO NOTE 1	01
5	6505010-98	. SILKSCREEN-LIFE RAFT LOCATOR REFER TO NOTE 1.	01
- 6	6505010-99	. PLACARD-LIFE RAFT LOCATOR REFER TO NOTE 2.	01

NOTE 1—WHEN ORDERING SILKSCREEN PART NUMBERS THE PRODUCT YOU RECEIVE WILL BE IN THE FORM OF A PLACARD.

NOTE 2—USED WHEN INSTALLED ON A MIRRORED, FABRIC-COVERED OR TEXTURED LEATHER BACKGROUND.

- ITEM NOT ILLUSTRATED

CHAPTER

21

AIR CONDITIONING

CHAPTER SECTION SUBJECT		NUMBER OF PAGES	DATE
21 - TITLE			
21 - LIST OF EFFECTIVE PAGES			
21 - RECORD OF TEMPORARY REVISIONS			
21 - TABLE OF CONTENTS			
21-21-00	Figure 01	2	May 1/2014
21-23-00	Figure 01	6	May 1/2014
21-23-20	Figure 01	2	Apr 1/2015
21-23-25	Figure 01	2	Oct 1/2015
21-25-00	Figure 01	4	May 1/2014
21-25-00	Figure 02	2	May 1/2014
21-25-20	Figure 01	4	Jul 1/2016
21-25-75	Figure 01	4	May 1/2014
21-26-00	Figure 01	2	Jan 1/2015
21-27-00	Figure 01	2	May 1/2014
21-28-00	Figure 01	2	May 1/2014
21-29-00	Figure 01	2	May 1/2014
21-30-00	Figure 01	2	Apr 1/2015
21-31-00	Figure 01	2	May 1/2014
21-33-00	Figure 01	2	May 1/2014
21-35-00	Figure 01	4	May 1/2014
21-50-00	Figure 01	2	May 1/2014
21-50-05	Figure 01	2	May 1/2014
21-50-10	Figure 01	2	May 1/2014
21-50-20	Figure 01	2	May 1/2014
21-60-00	Figure 01	6	May 1/2014
21-70-05	Figure 01	2	May 1/2014

© Cessna Aircraft Company

SUBJECT	CHAPTER SECTION SUBJECT	FIGURE	EFFECTIVITY START	EFFECTIVITY END
BLEED AIR SUPPLY - ENVIRONMENTAL CONTROL UNIT	21-21-00	01		
COOL AIR DISTRIBUTION - TAILCONE	21-23-00	01		
CABIN OVERHEAD DUCT	21-23-20	01		
COCKPIT OVERHEAD DUCT	21-23-25	01		
WARM AIR DISTRIBUTION - TAILCONE	21-25-00	01		
WARM AIR DISTRIBUTION - CABIN AISLE	21-25-00	02		
COCKPIT AIR DISTRIBUTION - BELOW-FLOOR DUCT	21-25-20	01		
WARM AIR DISTRIBUTION - CABIN	21-25-75	01		
BAGGAGE COMPARTMENT WARM AIR DISTRIBUTION	21-26-00	01		
RAM AIR/FRESH AIR DISTRIBUTION	21-27-00	01		
INSTRUMENT PANEL COOLING	21-28-00	01		
NOSE AVIONICS COOLING	21-29-00	01		
PRESSURIZATION CONTROL SYSTEM	21-30-00	01		
FORWARD PRESSURIZATION CONTROL SYSTEM	21-31-00	01		
AFT PRESSURIZATION CONTROL SYSTEM	21-33-00	01		
BAGGAGE COMPARTMENT PRESSURIZATION CONTROL SYSTEM	21-35-00	01		
ENVIRONMENTAL CONTROL UNIT	21-50-00	01		
ENVIRONMENTAL CONTROL UNIT SUPPORT	21-50-05	01		
ENVIRONMENTAL CONTROL UNIT EXHAUST DUCT ASSEMBLY	21-50-10	01		
WATER SEPARATOR	21-50-20	01		
TEMPERATURE CONTROL SYSTEM	21-60-00	01		
OZONE CONVERTER	21-70-05	01		

© Cessna Aircraft Company

A85268

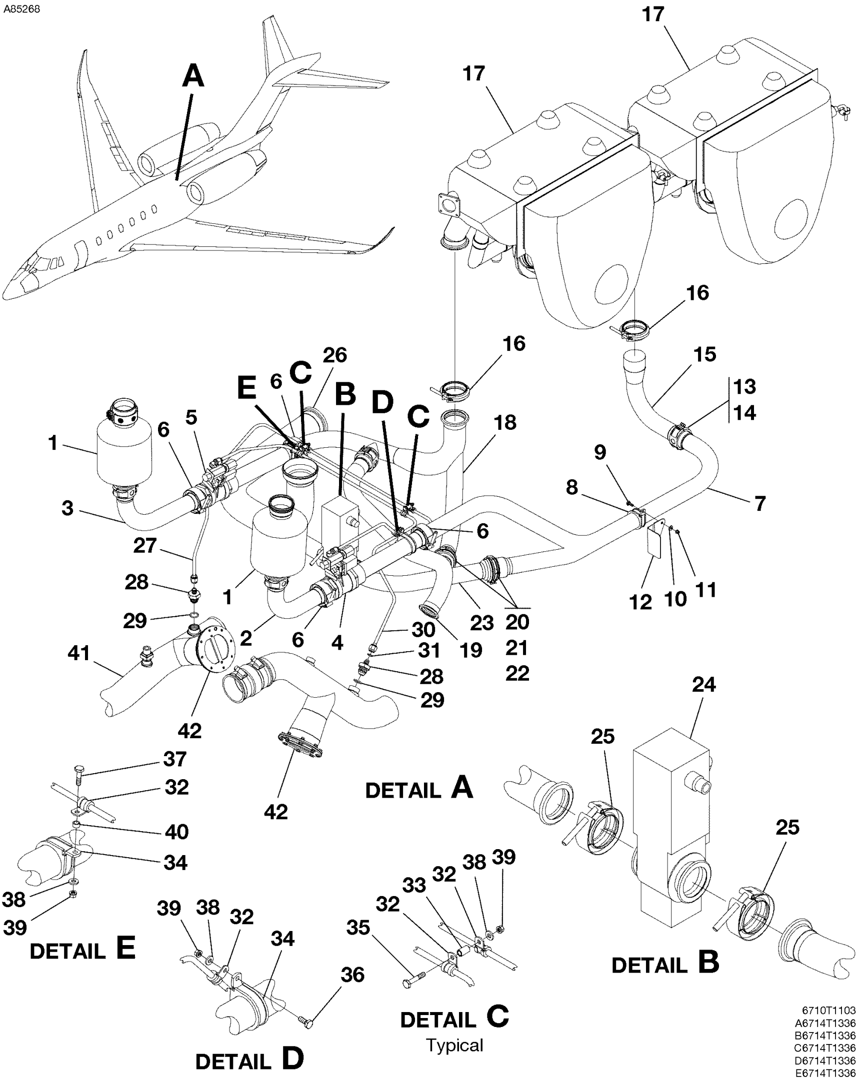

BLEED AIR SUPPLY - ENVIRONMENTAL CONTROL UNIT
FIGURE 01 (SHEET 1)

FIG ITEM	PART NUMBER	NOMENCLATURE 1 2 3 4 5 6 7		UNITS PER ASSY
01				
-		BLEED AIR SUPPLY - ENVIRONMENTAL CONTROL UNIT		RF
1		. OZONE CONVERTER REFER TO 21-70-05 FIGURE 01		RF
2	6714392-73	. TUBE ASSY-ECU BLEED AIR SUPPLY		01
3	6714392-29	. TUBE ASSY-ECU BLEED AIR SUPPLY		01
4	9914504-1	. VALVE ASSY-BI-LEVEL FLOW CONTROL VT005		01
5	9914504-1	. VALVE ASSY-BI-LEVEL FLOW CONTROL VT006		01
6	NM102420-0150	. COUPLING V-BAND	V00624	04
7	6714372-12	. TUBE ASSY-ECU BLEED AIR SUPPLY ATTACHING PARTS		01
8	MS21919WCJ24	. CLAMP		01
9	AN3-4A	. BOLT		01
10	NAS1149F0363P	. WASHER		01
11	MS21042L3	. NUT —*—		01
12	6714372-9	. BRACKET-ECU TUBE MOUNTING		01
13	W991-24TE	. COUPLING	V79326	01
14	W932-24B	. SEAL ASSY	V79326	02
15	6714392-88	. TUBE ASSY		01
16	NM102420-0200	. COUPLING	V00624	02
17		. ENVIRONMENTAL CONTROL UNIT REFER TO 21-50-00 FIGURE 01		RF
18	6714372-2	. TUBE ASSY-ECU BLEED AIR SUPPLY		01
19		. WARM AIR DISTRIBUTION-TAILCONE REFER TO 21-25-00 FIGURE 01		RF
20	7C2W-140000	. VALVE-CHECK	V81833	02
21	W991-28TE	. COUPLING	V79326	02
22	W932-28B	. SEAL ASSY	V79326	04
23	6714392-47	. TUBE ASSY-BLEED AIR		01
24	9914536-6	. VALVE ASSY-AIR CYCLE MACHINE SHUTOFF VT023		01
25	NM102420-0150	. COUPLING V-BAND	V00624	02
26		. BLEED AIR DISTRIBUTION-AUXILIARY POWER UNIT REFER TO 36-13-00 FIGURE 01		RF
27	6714371-4	. TUBE ASSY		01
28	AS5174D0804	. REDUCER		02
29	MS9385-08	. O-RING		02
30	6714371-3	. TUBE ASSY		01
31	MS9385-04	. O-RING		02
32	MS21919WDF4	. CLAMP		06
33	NAS43DD3-33N	. SPACER		02
34	MS21919WCJ24	. CLAMP		02
35	AN3-10A	. BOLT		02
36	AN3-4A	. BOLT		01
37	AN3-6A	. BOLT		01
38	NAS1149F0363P	. WASHER		06
39	MS21042L3	. NUT		06
40	NAS43DD3-11N	. SPACER		01
41		. COOL AIR DISTRIBUTION-TAILCONE. REFER TO 21-25-00 FIGURE 01		RF
42		. RAM AIR/FRESH AIR DISTRIBUTION-TAILCONE. REFER TO 21-27-00 FIGURE 01		RF

- ITEM NOT ILLUSTRATED

A85253

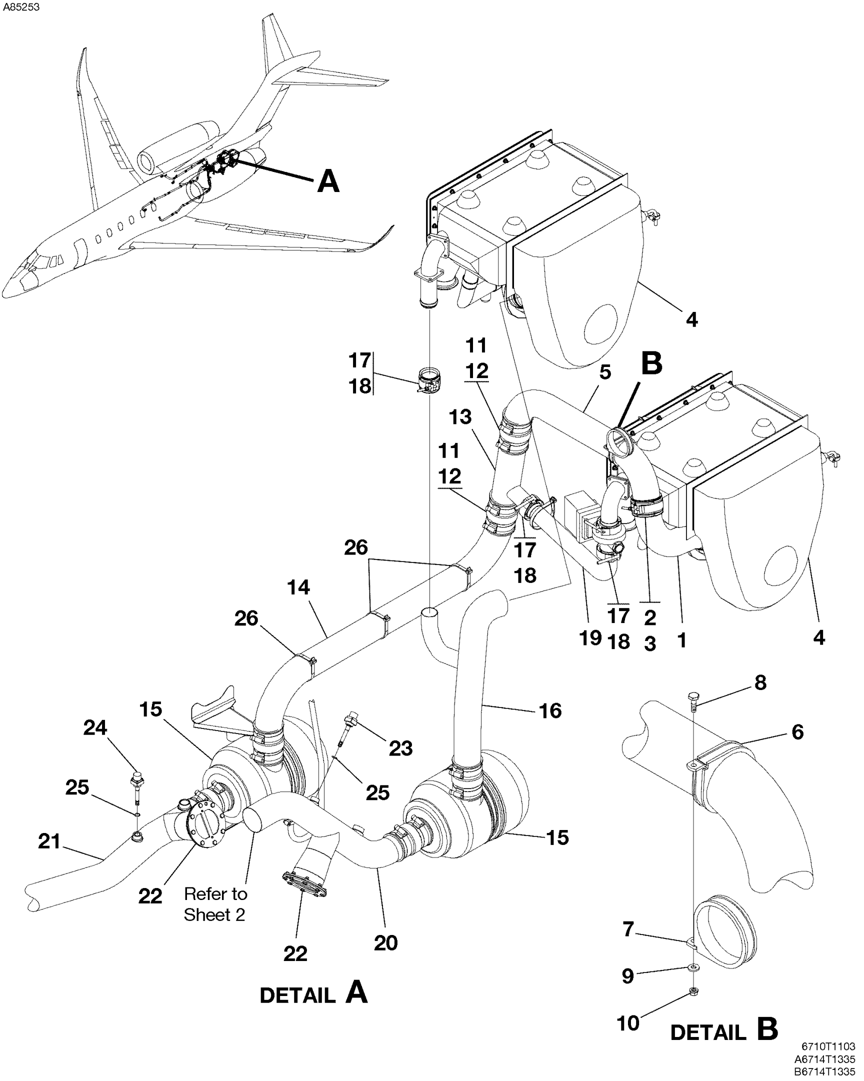

COOL AIR DISTRIBUTION - TAILCONE
FIGURE 01 (SHEET 1)

FIG ITEM	PART NUMBER	NOMENCLATURE 1 2 3 4 5 6 7		UNITS PER ASSY
01				
-		COOL AIR DISTRIBUTION - TAILCONE		RF
1	6714353-1	. TUBE ASSY-COOL AIR		01
2	U50-250SS	. COUPLING	V94581	01
3	SS4-250	. SLEEVE	V94581	01
4		. ENVIRONMENTAL CONTROL UNIT REFER TO 21-50-05 FIGURE 01		RF
5	6714353-7	. TUBE ASSY-COOL AIR		01
		ATTACHING PARTS		
6	MS21919WCH40	. CLAMP		01
7	MS21919WCH32	. CLAMP		01
8	AN3-5A	. BOLT		01
9	NAS1149F0363P	. WASHER		01
10	MS21042L3	. NUT		01
		—*—		
11	S3295-10-15	. COUPLING-FLEXIBLE		02
12	S1891-40	. CLAMP		04
13	6714353-9	. TUBE ASSY-COOL AIR		01
14	6714353-21	. TUBE-COOL AIR		01
15		. WATER SEPARATOR REFER TO 21-50-20 FIGURE 01		RF
16	6714356-59	. TUBE ASSY-COOL AIR		01
17	U50-150SS	. COUPLING	V94581	03
18	SS4-150	. SLEEVE	V94581	03
19	6714356-43	. TUBE ASSY-COOL AIR		01
20	6714356-31	. TUBE ASSY-COOL AIR		01
21		. TUBE-WARM AIR DISTRIBUTION REFER TO 21-25-00 FIGURE 01		RF
22		. RAM AIR/FRESH AIR DISTRIBUTION REFER TO 21-27-00 FIGURE 01		RF
23	9914130-20	. DUCT SENSOR-ACM TEMPERATURE CABIN TT037		01
24	9914130-20	. DUCT SENSOR-ACM TEMPERATURE CABIN TT038		01
25	AS3209-012	. O-RING		02
26	MS3367-3-9	. STRAP		04

- ITEM NOT ILLUSTRATED

A85254

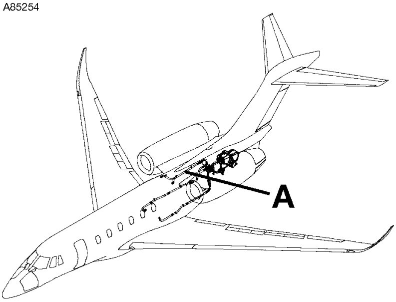

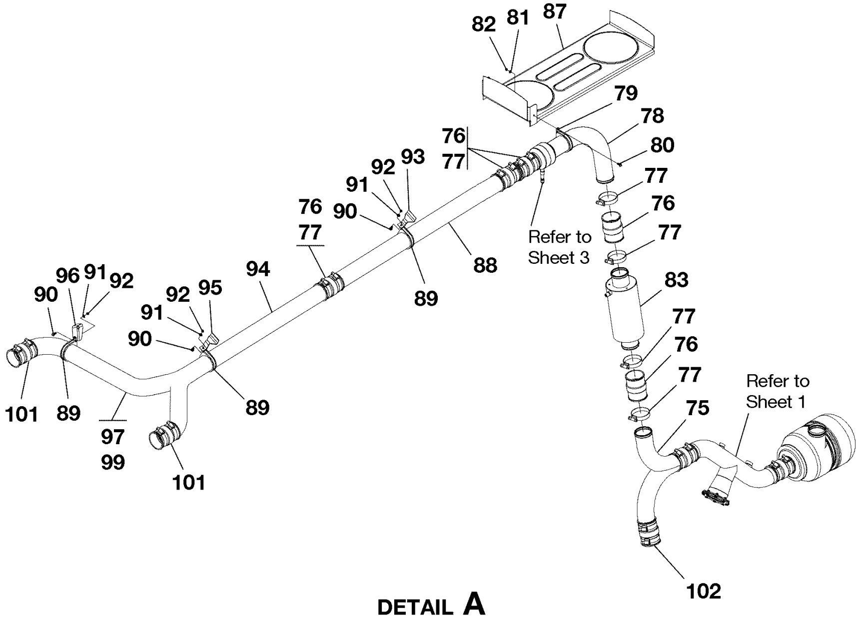

DETAIL A

6710T1103
A6714T1335

COOL AIR DISTRIBUTION - TAILCONE
FIGURE 01 (SHEET 2)

FIG ITEM	PART NUMBER	NOMENCLATURE 1 2 3 4 5 6 7	UNITS PER ASSY
01			
75	6714353-101	. TUBE ASSY-COOL AIR	01
76	S3295-10-15	. COUPLING	AR
77	S1891-40	. CLAMP	AR
78	6714012-13	. WELDMENT	01
79	MS21919WCH40	. CLAMP	01
		ATTACHING PARTS	
80	AN3-4A	. BOLT	02
81	NAS1149F0363P	. WASHER	02
82	MS21042L3	. NUT	02
		—*—	
83	6715003-1	. MUFFLER ASSY-CONDITIONED AIR	02
- 84	AN910-2D	. COUPLING	01
- 85	AN929-6	. CAP ASSY	01
- 86	AS5194D0604	. ADAPTER	01
87		. SUPPORT TRAY ASSY REFER TO 26-20-15 FIGURE 01	RF
88	6714353-83	. TUBE ASSY-COOL AIR	01
89	MS21919WCH40	. CLAMP	03
		ATTACHING PARTS	
90	AN3-4A	. BOLT	02
91	NAS1149F0363P	. WASHER	02
92	MS21042L3	. NUT	02
		—*—	
93	6714354-13	. BRACKET-COOL AIR TUBE	01
94	6714356-45	. TUBE ASSY-COOL AIR	01
95	6714354-15	. BRACKET-COOL AIR TUBE	01
96	6714356-42	. BRACKET-COOL AIR	01
97	G441863	. INSULATION BKI	AR
- 98	G441858	. INSULATION ALT FOR G441863 BKI	AR
99	F840021	. TAPE BKI	AR
- 100	F840013	. TAPE ALT FOR F840021 BKI	AR
101		. COOL AIR DISTRIBUTION-CABIN REFER TO 21-23-20 FIGURE 01	RF
102		. WARM AIR DISTRIBUTION-TAILCONE REFER TO 21-25-00 FIGURE 01	RF

- ITEM NOT ILLUSTRATED

A85255

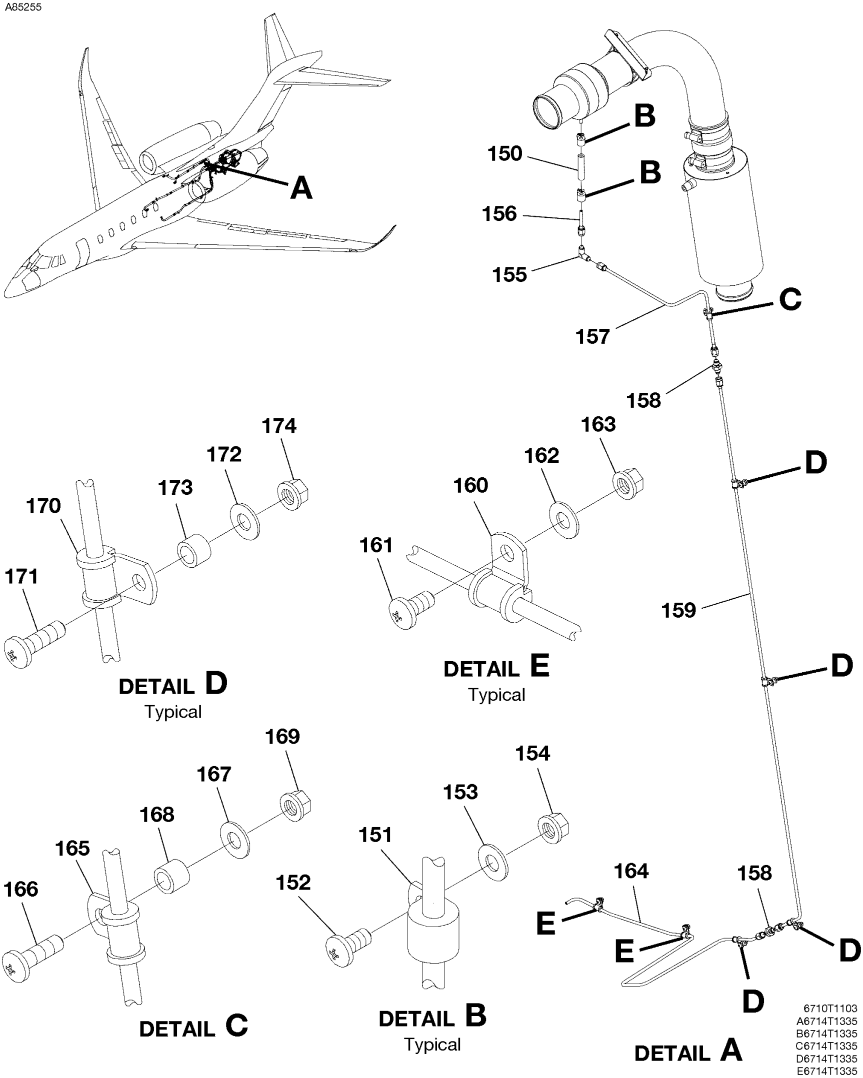

COOL AIR DISTRIBUTION - TAILCONE
FIGURE 01 (SHEET 3)

FIG ITEM	PART NUMBER	NOMENCLATURE 1 2 3 4 5 6 7	UNITS PER ASSY
01			
150	M5593-3	. HOSE BKI	AR
151	AN735D7	. CLAMP	02
		ATTACHING PARTS	
152	MS27039-1-06	. SCREW	01
153	NAS1149C0332R	. WASHER	01
154	MS21042-3	. NUT	01
		—*—	
155	AN821-3D	. ELBOW	01
156	6714012-7	. TUBE ASSY-OVERHEAD AIR WATER SCUPPER	01
157	6714361-2	. TUBE ASSY-OVERHEAD AIR WATER SCUPPER	01
158	AS5174-0303	. UNION	02
159	6714361-6	. TUBE ASSY-OVERHEAD AIR WATER SCUPPER	01
160	MS21919WH3	. CLAMP	02
		ATTACHING PARTS	
161	MS27039-1-06	. SCREW	01
162	NAS1149C0332R	. WASHER	01
163	MS21042-3	. NUT	01
		—*—	
164	6714361-5	. TUBE ASSY-OVERHEAD AIR WATER SCUPPER	01
165	MS21919WH3	. CLAMP	01
		ATTACHING PARTS	
166	MS27039-1-06	. SCREW	01
167	NAS1149C0332R	. WASHER	01
168	NAS43DD3-16FC	. SPACER	01
169	MS21042-3	. NUT	01
		—*—	
170	MS21919WH3	. CLAMP	04
		ATTACHING PARTS	
171	MS27039-1-18	. SCREW	01
172	NAS1149C0332R	. WASHER	01
173	NAS43DD3-48FC	. SPACER	01
174	MS21042-3	. NUT	01
		—*—	

- ITEM NOT ILLUSTRATED

A88274

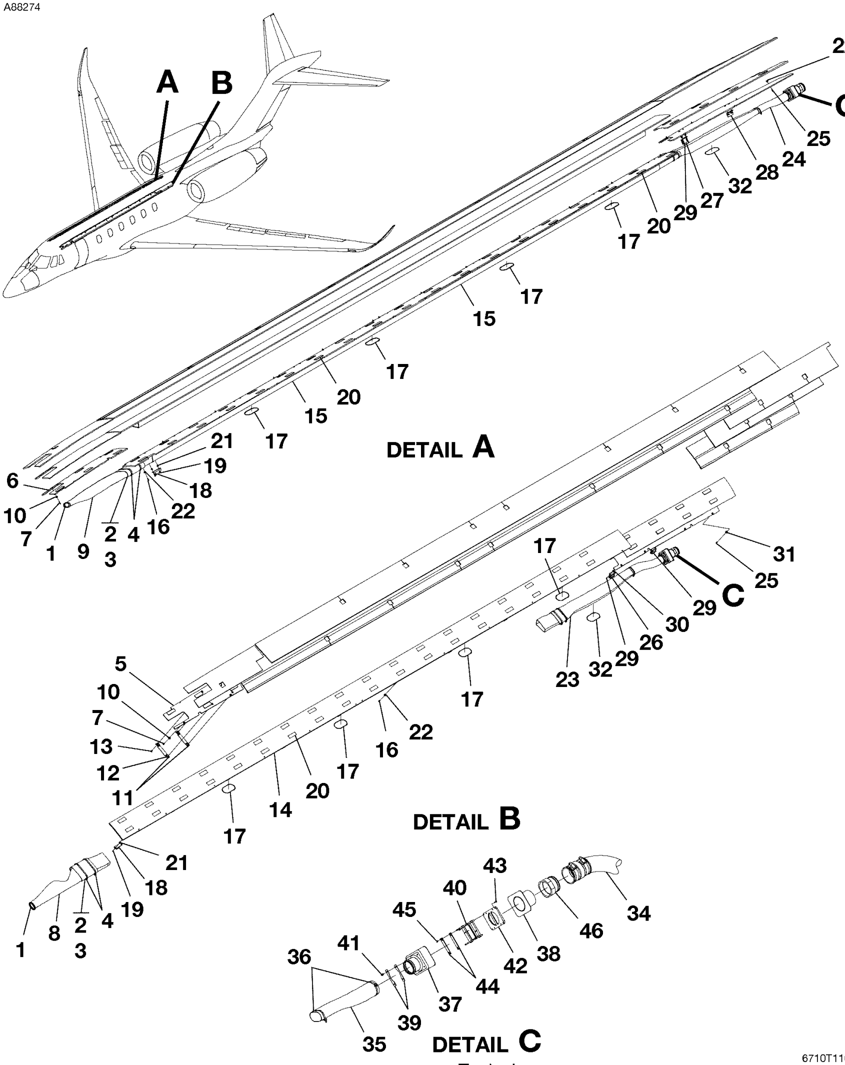

6710T1103
6719T1156

CABIN OVERHEAD DUCT
FIGURE 01 (SHEET 1)

FIG ITEM	PART NUMBER	NOMENCLATURE 1 2 3 4 5 6 7	UNITS PER ASSY
01			
-		CABIN OVERHEAD DUCT	RF
1		. COCKPIT OVERHEAD DUCT REFER TO 21-23-25 FIGURE 01	RF
2	BWT10-2320070A	. FLEX DUCT . . . VK2962	02
3	CM3213-14-3.50	. SLEEVE	04
4	MS3367-6-9	. STRAP	08
5	4417017-1	. LH FWD CABIN PSU ASSY	01
6	4417017-2	. RH FWD CABIN PSU ASSY	01
		ATTACHING PARTS	
7	MS24694-S7	. SCREW	02
		—*—	
8	4417018-9	. . LH FWD CABIN DUCT	01
9	4417018-4	. . RH FWD CABIN DUCT	01
10	S3884-08K250	. . INSERT	02
11	4417017-13	. . BRACKET-LH FWD CABIN DUCT	01
		ATTACHING PARTS	
12	S3878-832A04	. . INSERT	02
13	MS35206-240	. . SCREW	02
		—*—	
14	6719544-1	. LH CABIN PSU ASSY	01
15	6719544-2	. RH CABIN PSU ASSY	01
		ATTACHING PARTS	
16	MS24694-S7	. SCREW	13
		—*—	
17	90059727	. . PSU AIR GASKET . . . V02988	04
18	6719570-3	. . LATCH BRACKET ASSY-UPR PSU	10
		ATTACHING PARTS	
19	MS35206-225	. . SCREW	02
		—*—	
20	F990210	. . FABRIC FASTENER-BKI	AR
- 20A	F990328	. . FABRIC FASTENER-BKI ALT FOR F990210	AR
21	S3878-632A04	. . INSERT	20
22	S3884-08K250	. . INSERT	13
23	6719544-9	. LH AFT PSU ASSY	01 R
24	6719544-10	. RH AFT PSU ASSY	01 R
		ATTACHING PARTS	
25	MS24694-S7	. SCREW	04
		—*—	
26	6719570-5	. . LATCH BRACKET ASSY-LH LAVATORY PSU	01
27	6719570-6	. . LATCH BRACKET ASSY-RH LAVATORY PSU	01
28	6719570-9	. . LATCH BRACKET ASSY-UPR LAVATORY PSU	01
		ATTACHING PARTS	
29	MS35206-225	. . SCREW	02
		—*—	
30	S3878-632A04	. . INSERT	04
31	S3884-08K250	. . INSERT	04
32	90059727	. . PSU AIR GASKET . . . V02988	01
- 33		. CABIN PSU AIR/LIGHT INSTALLATION REFER TO NOTE 1	RF
34		. COOL AIR DISTRIBUTION REFER TO 21-23-00 FIGURE 01	RF
35	BWT10-2180140A	. FLEX DUCT . . . VK2962	02
36	MS3367-7-9	. STRAP	04
37	6719526-3	. CHECK VALVE HOUSING	02
38	6719526-2	. COLD AIR GASKET-AFT BULKHEAD	02
39	6719525-3	. CLIP	04
40	6719525-1	. CHECK VALVE ASSY	02
		ATTACHING PARTS	
41	MS35206-241	. SCREW	04
		—*—	
42	6719525-2	. . CHECK VALVE PLATE	01
		ATTACHING PARTS	
43	MS24693-S4	. . SCREW	08
		—*—	
44	6719052-8	. . SUPPORT	02
		ATTACHING PARTS	
45	MS24693-S1	. . SCREW	02
		—*—	
46	6719052-35	. ADAPTOR	02

NOTE 1—REFER TO MODEL TEN INTERIOR MAINTENANCE MANUAL AND PARTS CATALOG.

- ITEM NOT ILLUSTRATED

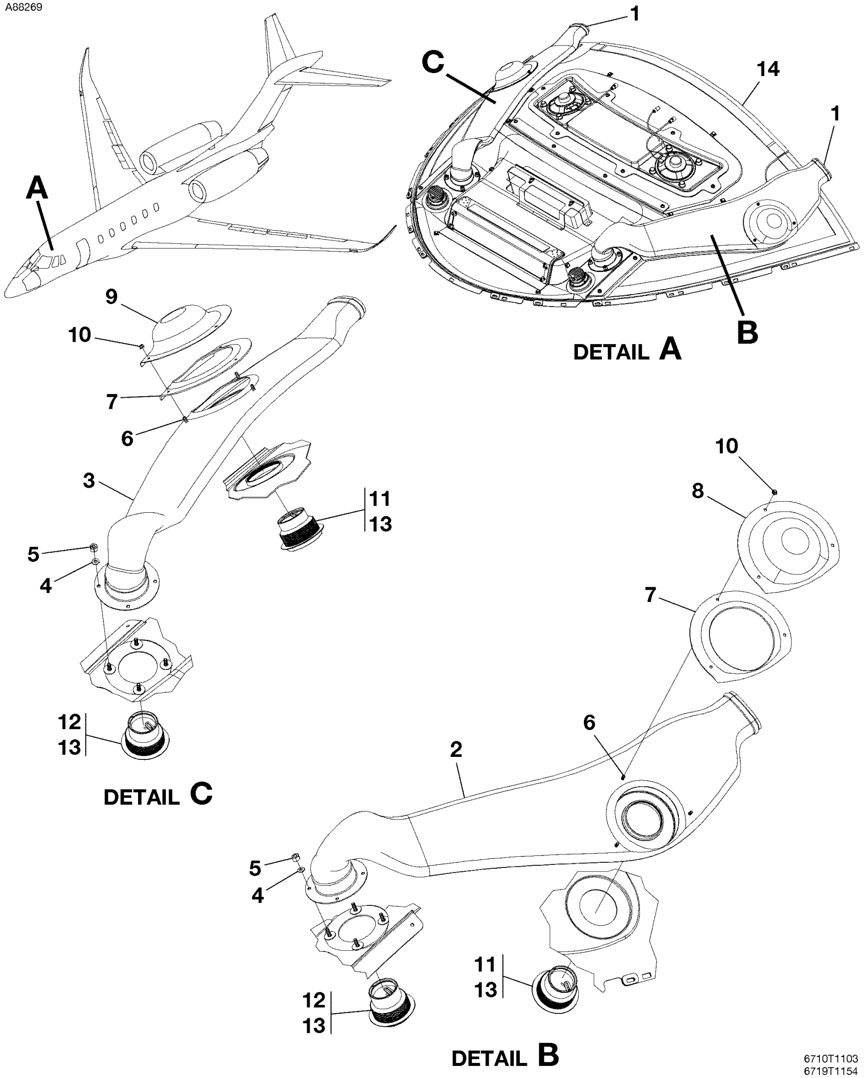

COCKPIT OVERHEAD DUCT
FIGURE 01 (SHEET 1)

FIG ITEM	PART NUMBER	NOMENCLATURE 1 2 3 4 5 6 7			UNITS PER ASSY	
01						
-		COCKPIT OVERHEAD DUCT			RF	
1		. CABIN OVERHEAD DUCT REFER TO 21-23-20 FIGURE 01			RF	
2	6719640-5	. COCKPIT OVERHEAD DUCT ASSY-W/PHONE LH	0501	0501	01	
- 2A	6719640-23	. COCKPIT OVERHEAD DUCT ASSY-W/PHONE LH	0501	0521	01	R
- 2B	6719640-29	. COCKPIT OVERHEAD DUCT ASSY-W/PHONE LH	0522	& ON	01	R
3	6719640-6	. COCKPIT OVERHEAD DUCT ASSY-W/PHONE RH	0501	0501	01	
- 3A	6719640-24	. COCKPIT OVERHEAD DUCT ASSY-W/PHONE RH	0501	0521	01	R
- 3B	6719640-30	. COCKPIT OVERHEAD DUCT ASSY-W/PHONE RH	0522	& ON	01	R
		ATTACHING PARTS				
4	NAS1149DN832J	. WASHER			04	
5	MS21044N08	. NUT			04	
		—*—				
6	CB5000CRA06-6	. . STUD V66530			03	
7	6719640-13	. . AIR DUCT GASKET			01	
8	6719640-11	. COCKPIT OVERHEAD DUCT CAP-W/PHONE LH	0501	0501	01	
- 8A	6719640-27	. COCKPIT OVERHEAD DUCT CAP-W/PHONE LH	0501	& ON	01	
9	6719640-12	. COCKPIT OVERHEAD DUCT CAP-W/PHONE RH	0501	0501	01	
- 9A	6719640-28	. COCKPIT OVERHEAD DUCT CAP-W/PHONE RH	0501	& ON	01	
		ATTACHING PARTS				
10	MS21042-06	. NUT			03	
		—*—				
11	9919139-1	. CABIN AIR OUTLET ASSY			02	
12	9919139-4	. TORSO AIR OUTLET ASSY			02	
13	9919139-3	. MOUNTING NUT			04	
14		. HEADLINER REFER TO NOTE 1			RF	

NOTE 1—REFER TO MODEL TEN INTERIOR MAINTENANCE MANUAL AND PARTS CATALOG.

- ITEM NOT ILLUSTRATED

A85229

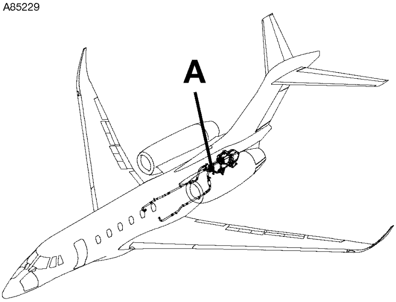

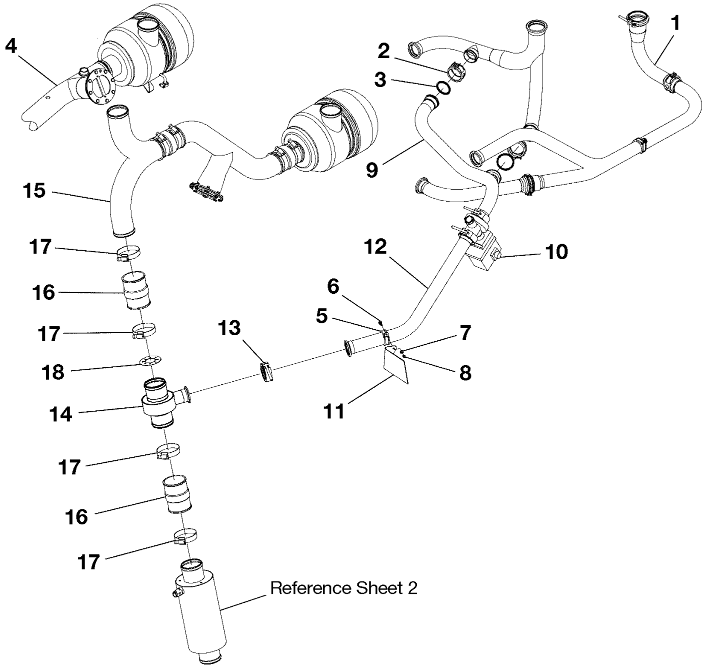

DETAIL A

6710T1103
A6714T1333

WARM AIR DISTRIBUTION - TAILCONE
FIGURE 01 (SHEET 1)

FIG ITEM	PART NUMBER	NOMENCLATURE 1 2 3 4 5 6 7		UNITS PER ASSY
01				
-		WARM AIR DISTRIBUTION - TAILCONE		RF
1		. BLEED AIR SUPPLY-ENVIRONMENTAL CONTROL UNIT REFER TO 21-21-00 FIGURE 01		RF
2	W991-24TE	. COUPLING	V79326	01
3	W932-24B	. SEAL ASSY	V79326	02
4	6714356-53	. TUBE-WARM AIR		01
5	MS21919WCJ24	. CLAMP		03
		ATTACHING PARTS		
6	AN3-4A	. BOLT		01
7	NAS1149F0363P	. WASHER		01
8	MS21042L3	. NUT		01
		—*—		
9	6714392-90	. TUBE ASSY-WARM AIR		01
10		. TEMPERATURE CONTROL SYSTEM-CABIN/COCKPIT REFER TO 21-60-00 FIGURE 01		RF
11	6714397-5	. BRACKET-LH WARM AIR DUCT MOUNTING		01
12	6714392-92	. TUBE ASSY-WARM AIR		02
13	NM102420-0150	. COUPLING V-BAND	V00624	02
14	6715002-1	. MIXING MUFF-AIR DISTRIBUTION		02
15		. COOL AIR DISTRIBUTION-TAILCONE REFER TO 21-23-00 FIGURE 01		RF
16	S3295-10-15	. COUPLING		02
17	S1891-40	. CLAMP		04
18	6714024-3	. ORIFICE-LH		01

- ITEM NOT ILLUSTRATED

A85230

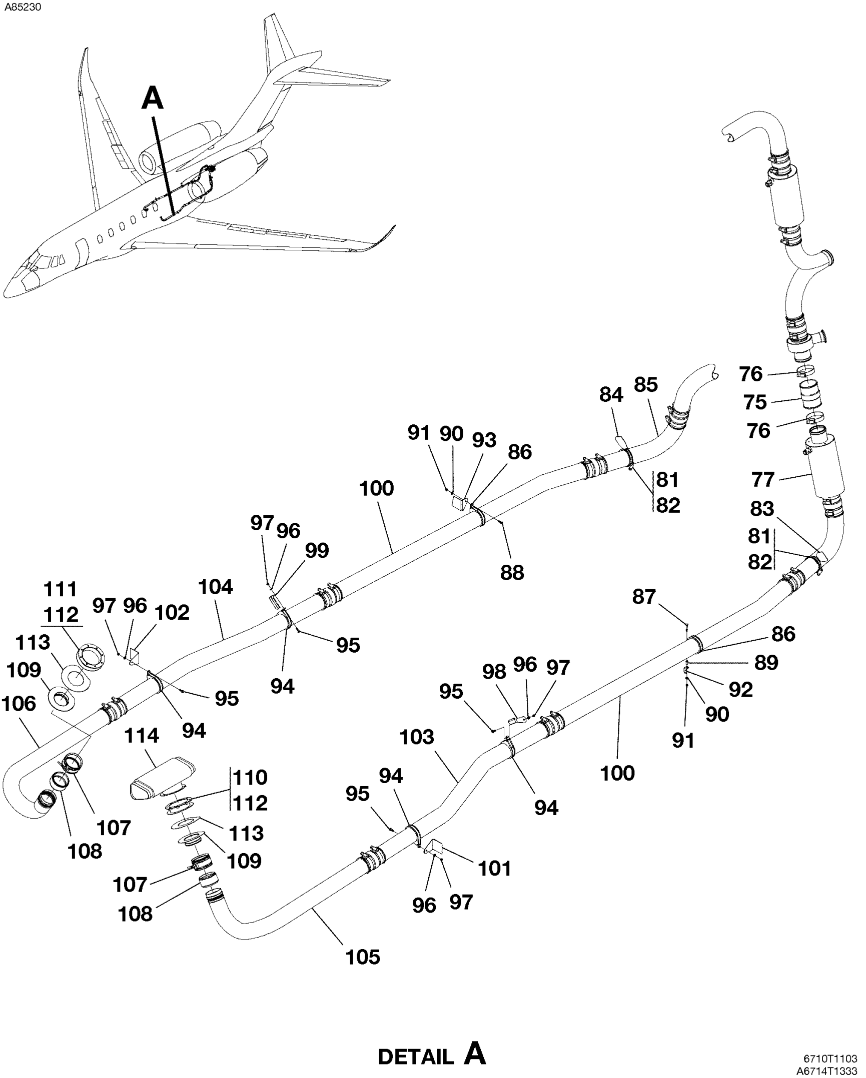

WARM AIR DISTRIBUTION - TAILCONE
FIGURE 01 (SHEET 2)

FIG ITEM	PART NUMBER	NOMENCLATURE 1 2 3 4 5 6 7		UNITS PER ASSY
01				
75	S3295-10-15	. COUPLING		10
76	S1891-40	. CLAMP		AR
77	6715003-1	. MUFFLER ASSY-CONDITIONED AIR		02
- 78	AN910-2D	. COUPLING-PIPE		04
- 79	AS5194D0604	. ADAPTER		04
- 80	AN929-6	. CAP ASSY		04
81	S1891-40	. CLAMP		02
82	MS21919WCH40	. CLAMP REFER TO NOTE 1		02
83	6714354-18	. BRACKET-LH WARM AIR DUCT MOUNTING		01
84	6714354-19	. BRACKET-RH WARM AIR DUCT MOUNTING		01
85	6714353-96	. DUCT ASSY-WARM AIR		02
86	MS21919WCH40	. CLAMP		02
		ATTACHING PARTS		
87	AN3-11A	. BOLT-LH		01
88	AN3-5A	. BOLT-RH		01
89	NAS43DD3-32FC	. SPACER-LH		01
90	NAS1149F0363P	. WASHER		01
91	MS21042L3	. NUT		01
		—*—		
92	AN743-13	. BRACKET-LH WARM AIR DUCT MOUNTING		01
93	6714354-5	. BRACKET-RH WARM AIR DUCT MOUNTING		01
94	MS21919WCH40	. CLAMP		04
		ATTACHING PARTS		
95	AN3-5A	. BOLT		01
96	NAS1149F0363P	. WASHER		01
97	MS21042L3	. NUT		01
		—*—		
98	6714356-29	. BRACKET-LH WARM AIR DUCT MOUNTING		01
99	6714356-39	. BRACKET-RH WARM AIR DUCT MOUNTING		01
100	6714353-55	. DUCT-WARM AIR		02
101	6714356-40	. BRACKET ASSY-LH WARM AIR DUCT MOUNTING		01
102	6714354-10	. BRACKET-RH WARM AIR DUCT MOUNTING		01
103	6714353-57	. DUCT-LH WARM AIR		01
104	6714353-58	. DUCT-RH WARM AIR		01
105	6714353-59	. DUCT-LH WARM AIR		01
106	6714353-60	. DUCT-RH WARM AIR		01
107	U50-250SS	. COUPLING	V94581	02
108	SS4-250	. SLEEVE	V94581	02
109	6714555-25	. ADAPTER WELD ASSY		02
110	6714555-23	. FLANGE ASSY LH		01
111	6714555-24	. FLANGE ASSY RH		01
112	MS21075L3N	. . NUTPLATE		08
113	6714555-18	. FILLER		02
114		. WARM AIR DISTRIBUTION-CABIN AISLE REFER TO 21-25-00 FIGURE 01		RF

NOTE 1—REMOVE CUSHION FROM MS21919WCH40 CLAMP AND INSTALL ON S1891-40 CLAMP.

- ITEM NOT ILLUSTRATED

A88256

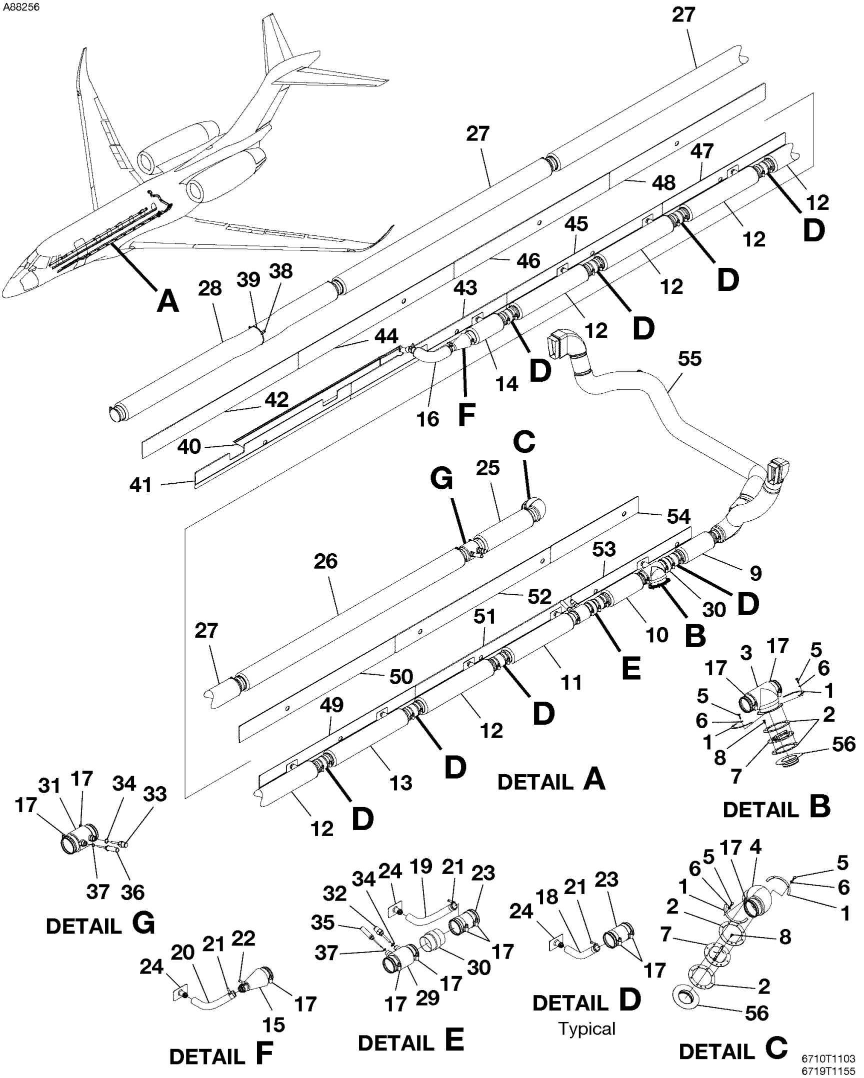

WARM AIR DISTRIBUTION - CABIN AISLE
FIGURE 02 (SHEET 1)

FIG ITEM	PART NUMBER	NOMENCLATURE 1 2 3 4 5 6 7		UNITS PER ASSY
02				
-		WARM AIR DISTRIBUTION - CABIN AISLE		RF
1	6719032-100	. INLET SUPPORT-LH AND RH		04
2	6719032-26	. GASKET-LH AND RH		04
3	6719509-1	. LH INLET DUCT ASSY		01
4	6719529-1	. RH INLET DUCT ASSY		01
		ATTACHING PARTS		
5	AN3-5A	. BOLT		04
6	NAS1149F0363P	. WASHER		04
		—*—		
7	6719032-91	. CHECK VALVE-LH AND RH		02
		ATTACHING PARTS		
8	MS24693-S272	. SCREW		04
		—*—		
9	BWT12-4200112A	. FLEXIBLE DUCT INSULATED	VK2962	01
10	BWT12-4200121A	. FLEXIBLE DUCT INSULATED	VK2962	01
11	BWT12-4200202A	. FLEXIBLE DUCT INSULATED	VK2962	01
12	BWT12-4200222A	. FLEXIBLE DUCT INSULATED	VK2962	05
13	BWT12-4200240A	. FLEXIBLE DUCT INSULATED	VK2962	01
14	BWT12-4200110A	. FLEXIBLE DUCT INSULATED	VK2962	01
15	6719509-4	. ADAPTOR DUCT ASSY		01
16	BWT12-4080110A	. FLEXIBLE DUCT INSULATED	VK2962	01
17	S1891-40	. CLAMP		31
18	S3299A3-06-020	. DUCT		08
19	S3299A3-06-040	. DUCT		01
20	S3299A3-06-036	. DUCT		01
21	S1891-12	. CLAMP		10
22	S1891-16	. CLAMP		02
23	6619016-35	. BRANCH FEEDER DUCT		09
24	6619016-42	. BRANCH LINE OUTLET		10
25	BWT12-4220161A	. FLEXIBLE DUCT INSULATED	VK2962	01
26	BWT12-4220621A	. FLEXIBLE DUCT INSULATED	VK2962	01
27	BWT12-4220592K	. FLEXIBLE DUCT INSULATED	VK2962	02
28	BWT12-4220602K	. FLEXIBLE DUCT INSULATED	VK2962	01
29	6719529-10	. TEMP SENSOR DUCT ASSY-LH		01
30	CM3570-20	. COUPLING		02
31	6719529-4	. TEMP SENSOR DUCT ASSY-RH		01
32	MS28034-1	. BULB-LH TC010		01
33	MS28034-1	. BULB-RH TC011		01
34	S3278C7	. O-RING		02
35	1173T42	. SWITCH-TEMPERATURE-LH SF019	V98087	01
36	1173T42	. SWITCH-TEMPERATURE-RH SF018	V98087	01
37	S3278C4	. O-RING		02
38	S3528-5D	. ANCHOR ASSY		01
39	MS3367-2-9	. STRAP		01
40	6719509-7	. DROPPED AISLE DUCT ASSY		01
41	6719523-17	. LH THERMAL BARRIER		01
42	6719523-14	. RH THERMAL BARRIER		01
43	6719523-3	. LH THERMAL BARRIER		01
44	6719523-12	. RH THERMAL BARRIER		01
45	6719523-5	. LH THERMAL BARRIER		01
46	6719523-10	. RH THERMAL BARRIER		01
47	6719523-7	. LH THERMAL BARRIER		01
48	6719523-8	. RH THERMAL BARRIER		01
49	6719523-9	. LH THERMAL BARRIER		01
50	6719523-6	. RH THERMAL BARRIER		01
51	6719523-11	. LH THERMAL BARRIER		01
52	6719523-4	. RH THERMAL BARRIER		01
53	6719523-13	. LH THERMAL BARRIER		01
54	6719523-2	. RH THERMAL BARRIER		01
55		. AFT DUCTING REFER TO 21-25-75 FIGURE 01		RF
56		. ADAPTER WELD ASSY REFER TO 21-25-00 FIGURE 01		RF

- ITEM NOT ILLUSTRATED

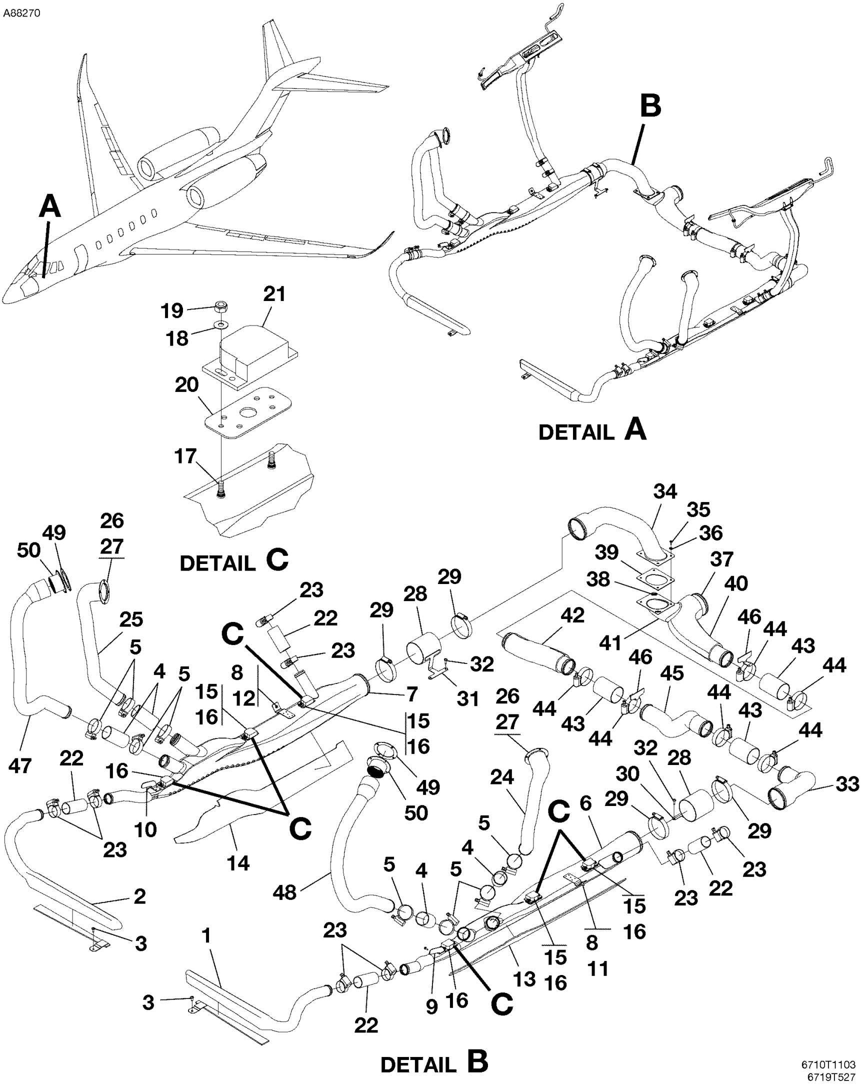

COCKPIT AIR DISTRIBUTION - BELOW-FLOOR DUCT
FIGURE 01 (SHEET 1)

FIG ITEM	PART NUMBER	NOMENCLATURE 1 2 3 4 5 6 7				UNITS PER ASSY	
01							
-		COCKPIT AIR DISTRIBUTION - BELOW-FLOOR DUCT				RF	
1	4417032-1	. LH FOOTWARMER DUCT ASSY-FSO 4417032-31		0501	0524	01	R
- 1A	4417032-31	. LH FOOTWARMER DUCT ASSY		0525	& ON	01	
2	4417032-2	. RH FOOTWARMER DUCT ASSY-FSO 4417032-32		0501	0524	01	R
- 2A	4417032-32	. RH FOOTWARMER DUCT ASSY		0525	& ON	01	
		ATTACHING PARTS					
3	MS27039-1-07	. SCREW				01	
		—*—					
4	S2258-5-3.00	. DUCT				04	
5	NAS1924-58	. CLAMP				08	
6	6719527-7	. LH SIDE FOOTWARMER ASSY		0501	0524	01	
- 6A	6719527-9	. LH SIDE FOOTWARMER ASSY		0525	& ON	01	
7	6719527-8	. RH SIDE FOOTWARMER ASSY		0501	0524	01	
- 7A	6719527-10	. RH SIDE FOOTWARMER ASSY		0525	& ON	01	
		ATTACHING PARTS					
8	MS35206-243	. SCREW				01	
		—*—					
9	4417033-31	. . BRACKET-LH FWD SIDE FOOTWARMER				01	
10	4417033-32	. . BRACKET-RH FWD SIDE FOOTWARMER				01	
11	4417033-33	. . BRACKET-LH CTR SIDE FOOTWARMER				01	
12	4417033-34	. . BRACKET-RH CTR SIDE FOOTWARMER				01	
13	4417033-39	. . GASKET-LH SIDE FOOTWARMER				01	
14	4417033-40	. GASKET-RH SIDE FOOTWARMER				01	
15	4417033-57	. . GRABBER PLATE SPACER				02	
16	4417033-55	. . GRABBER PLATE ASSY		0501	0524	03	
- 16A	4417033-69	. . GRABBER PLATE ASSY		0525	& ON	03	
17	CHS440-6	. . . STUD	V56987			02	
18	NAS1149FN416P	. . . WASHER				02	
19	MS21045L04	. . . NUT				02	
20	4417033-56	. . . GRABBER PLATE				01	
21	C3-12-03	. . . CATCH - GRABBER DOOR	V94222	0501	0524	01	
- 21A	C3-12-05	. . . CATCH - GRABBER DOOR		0525	& ON	01	
22	S2258-3-3.00	. SLEEVING				04	
23	NAS1924-48	. CLAMP				08	
24	4417032-5	. TORSO AIR SUPPLY-LH AFT				01	
25	4417032-6	. TORSO AIR SUPPLY-RH AFT				01	
26	4417033-4	. . TORSO AIR GASKET				01	
27	9919139-2	. . TORSO AIR RETAINER				01	
28	S2258-10-3.00	. DUCT				02	
29	NAS1924-107	. CLAMP				04	
30	4417033-29	. BRACKET-LH AFT SIDE FOOTWARMER				01	
31	4417033-30	. BRACKET-RH AFT SIDE FOOTWARMER				01	
		ATTACHING PARTS					
32	MS27039-1-09	. SCREW				02	
		—*—					
33	6719527-3	. TRANSITION DUCT-LH				01	
34	6719527-4	. TRANSITION DUCT-RH				01	
		ATTACHING PARTS					
35	MS35206-228	. SCREW				04	
36	NAS1149FN632P	. WASHER				04	
		—*—					
37	4417032-16	. RH SPLITTER DUCT ASSY-FSO 4417032-30		0501	0524	01	R
- 37A	4417032-30	. RH SPLITTER DUCT ASSY		0525	& ON	01	
38	MS21069L06	. . NUTPLATE				04	
39	4417033-28	. . GASKET				01	
40	4417033-50	. . RH SPLITTER BLANKET		0501	0524	01	
- 40A	4417033-68	. . RH SPLITTER BLANKET		0525	& ON	01	
41	4417033-53	. . RH SPLITTER BLANKET				01	
42	4417032-15	. CTR AISLE DUCT ASSY				01	
43	S2258-7-3.00	. DUCT		0501	0524	03	
- 43A	S2258-7-4.00	. DUCT		0525	& ON	03	
44	NAS1924-74	. CLAMP				06	
45	6719527-5	. CROSSOVER DUCT-LH				01	
46	4419027-11	. DUCT SUPPORT				02	
47	4417032-17	. TORSO AIR SUPPLY-LH FWD				01	
48	4417032-18	. TORSO AIR SUPPLY-RH FWD				01	
49	4417033-4	. . TORSO AIR GASKET				01	
50	9919139-2	. . TORSO AIR RETAINER				01	

- ITEM NOT ILLUSTRATED

A88271

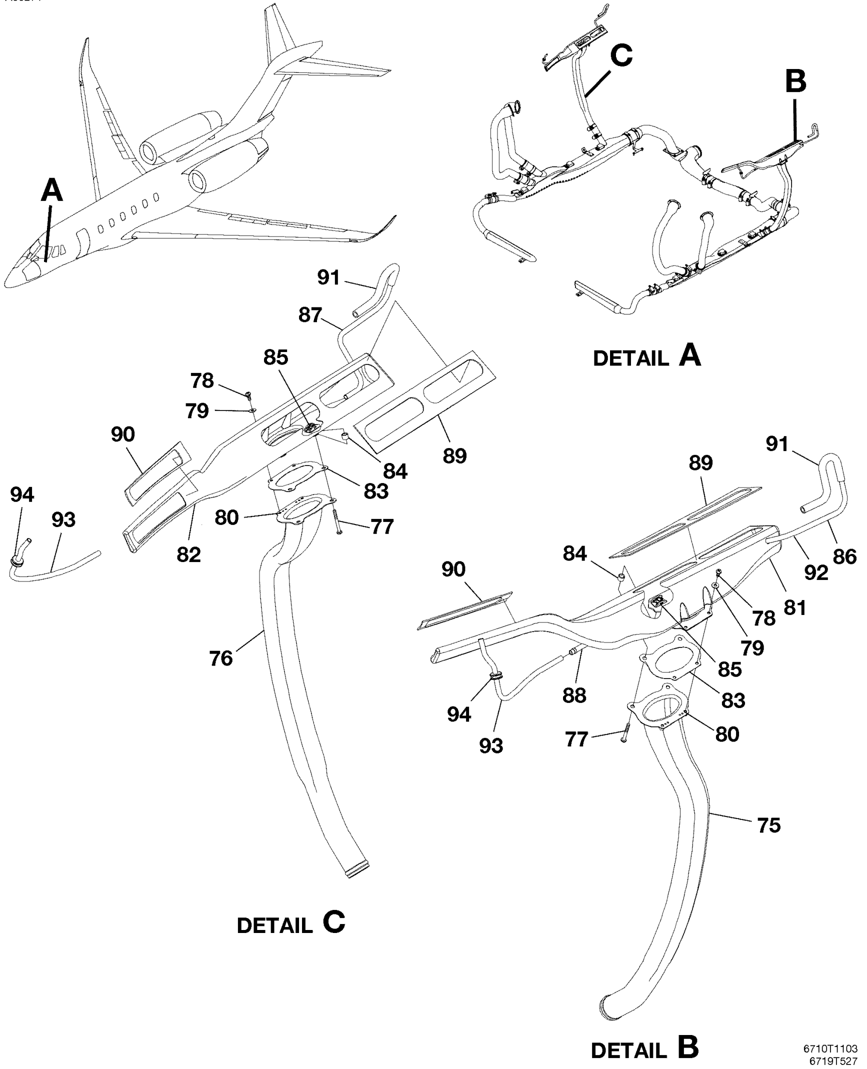

COCKPIT AIR DISTRIBUTION - BELOW-FLOOR DUCT
FIGURE 01 (SHEET 2)

FIG ITEM	PART NUMBER	NOMENCLATURE 1 2 3 4 5 6 7				UNITS PER ASSY	
01							
75	4417032-13	. LH DEFROST FEED ASSY				01	
76	4417032-14	. RH DEFROST FEED ASSY				01	
		ATTACHING PARTS					
77	MS35206-235	. SCREW				04	
78	MS35206-227	. SCREW				04	
79	NAS1149FN632P	. WASHER				04	
		—*—					
80	MS21071L06	. . NUTPLATE				02	
81	4417032-3	. LH WINDOW DEFROST ASSY-FSO 4417032-27		0501	0524	01	R
- 81A	4417032-27	. LH WINDOW DEFROST ASSY		0525	& ON	01	
82	4417032-4	. RH WINDOW DEFROST ASSY-FSO 4417032-28		0501	0524	01	R
- 82A	4417032-28	. RH WINDOW DEFROST ASSY		0525	& ON	01	
83	4417033-47	. . DEFROST FEED GASKET				01	
84	NAS43DD3-23FC	. . SPACER				02	
85	CB6009A08-1P	. . NUTPLATE-2 LUG BONDED	V66530			02	
86	4417033-23	. . DEFOG BLEED TUBE-LH				01	
87	4417033-24	. . DEFOG BLEED TUBE-RH				01	
88	4417033-27	. . DEFOG BLEED TUBE				01	
89	4417033-43	. . AFT DEFOG GASKET				01	
90	4417033-44	. . FWD DEFOG GASKET				01	
91	4417033-48	. WINDOW DEFROST TUBE				02	
92	S307-5	. TUBING BKI				AR	
93	CM3663-4	. TUBING BKI				AR	
94	MS35489-35	. GROMMET				02	

- ITEM NOT ILLUSTRATED

A88257

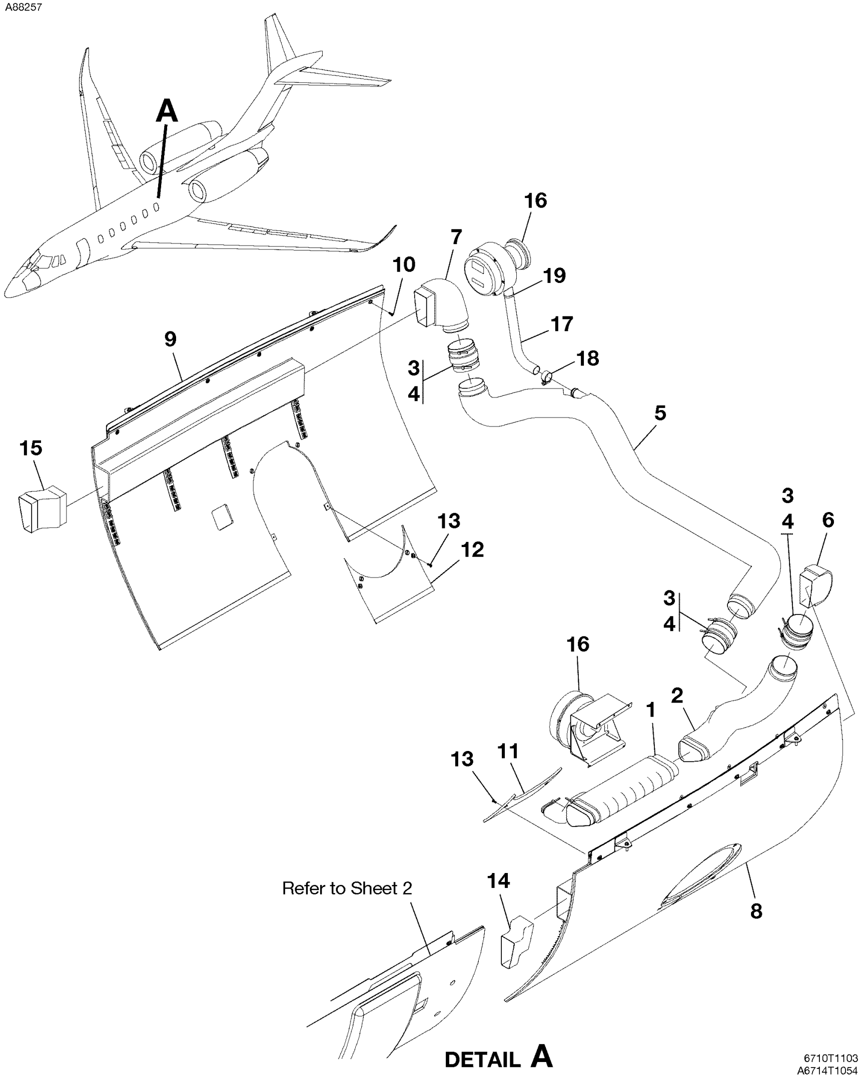

WARM AIR DISTRIBUTION - CABIN
FIGURE 01 (SHEET 1)

FIG ITEM	PART NUMBER	NOMENCLATURE 1 2 3 4 5 6 7	UNITS PER ASSY
01			
-		WARM AIR DISTRIBUTION - CABIN	RF
1		. WARM AIR DISTRIBUTION-CABIN AISLE REFER TO 21-25-00 FIGURE 02 . .	RF
2	6719032-107	. CONNECTOR DUCT ASSY-LH	01
3	CM3612-12A4.0	. DUCT BKI	03
		ATTACHING PARTS	
4	MS3367-2-9	. TIE STRAP	02
		—*—	
5	6719032-121	. CROSS OVER DUCT ASSY	01
6	6719032-17	. LH ADAPTER DUCT ASSY	01
7	6719032-86	. RH ADAPTER DUCT ASSY	01
8	6719530-5	. LH AFT LWR SIDEWALL ASSY	01
9	6719530-6	. RH AFT LWR SIDEWALL ASSY	01
		ATTACHING PARTS	
10	MS24694-S6	. SCREW	05
		—*—	
11	6719530-13	. LH CLOSE OUT PANEL ASSY	01
12	6719530-14	. RH CLOSE OUT PANEL ASSY	01
		ATTACHING PARTS	
13	MS24694-S6	. SCREW	02
		—*—	
14	6719032-19	. LH CONNECTOR DUCT ASSY	01
15	6719032-20	. RH CONNECTOR DUCT ASSY	01
16		. PRESSURIZATION-BAGGAGE REFER TO 21-35-00 FIGURE 01	RF
17	S2716-4B13.0	. DUCT BKI	01
		ATTACHING PARTS	
18	S1891-20S	. CLAMP	01
19	MS3367-1-0	. STA STRAP	02
		—*—	

- ITEM NOT ILLUSTRATED

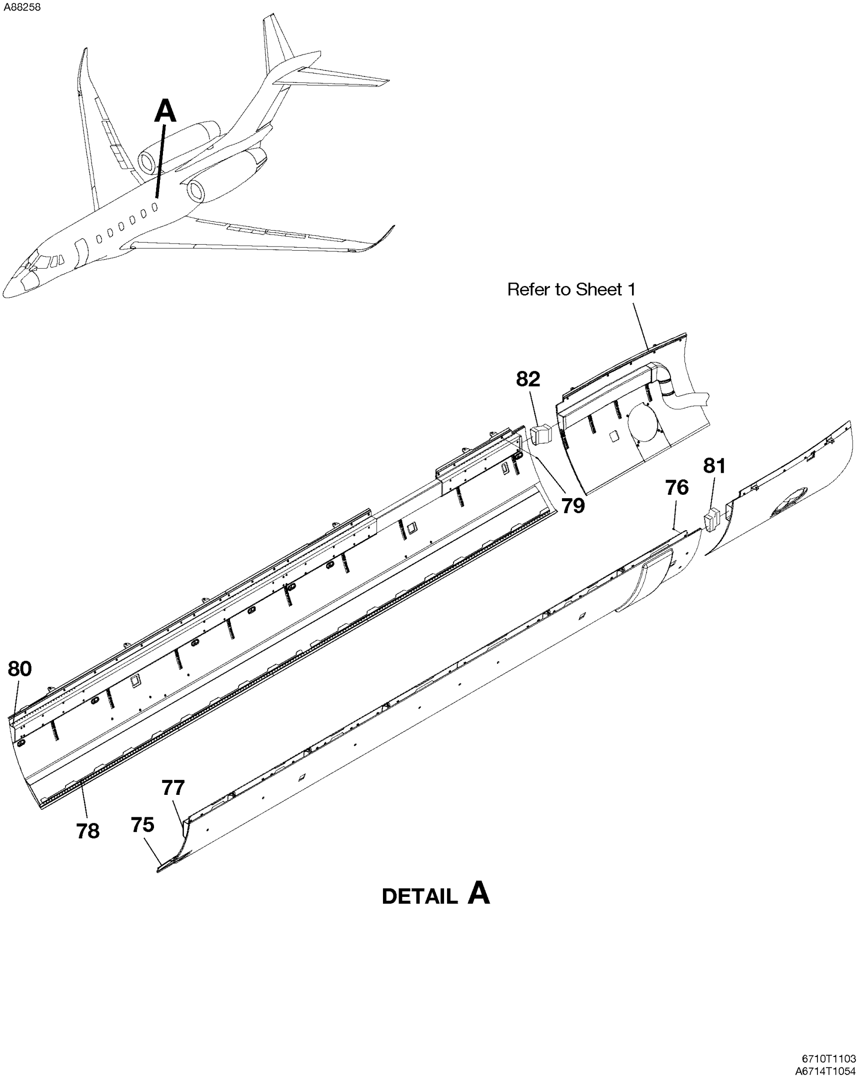

WARM AIR DISTRIBUTION - CABIN
FIGURE 01 (SHEET 2)

FIG ITEM	PART NUMBER	NOMENCLATURE 1 2 3 4 5 6 7	UNITS PER ASSY
01			
75	6719530-1	. LH LWR SIDEWALL ASSY	01
		ATTACHING PARTS	
76	MS24694-S6	. SCREW	17
		—*—	
77	4417042-9	. . END CAP - UPPER	01
78	6719530-2	. RH LWR SIDEWALL ASSY	01
		ATTACHING PARTS	
79	MS24694-S6	. SCREW	18
		—*—	
80	4417042-9	. . END CAP - UPPER	03
81	6719530-27	. LH TRANSITION DUCT ASSY	01
82	6719530-28	. RH TRANSITION DUCT ASSY	01

- ITEM NOT ILLUSTRATED

A85377

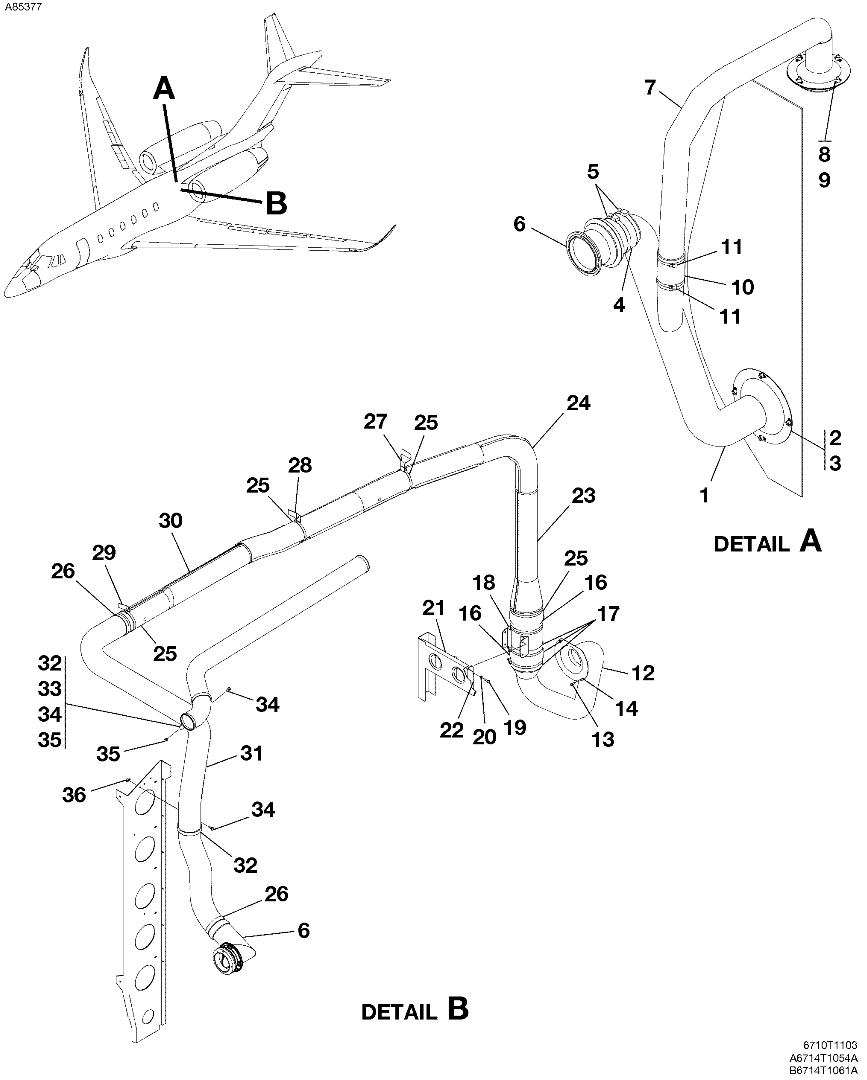

BAGGAGE COMPARTMENT WARM AIR DISTRIBUTION
FIGURE 01 (SHEET 1)

FIG ITEM	PART NUMBER	NOMENCLATURE 1 2 3 4 5 6 7				UNITS PER ASSY
01						
-		BAGGAGE COMPARTMENT WARM AIR DISTRIBUTION				RF
1	6714556-6	. DUCT ASSY-BAGGAGE COMPARTMENT HEAT				01
2	MS27039-1-09	. SCREW				04
3	MS21070L3	. . NUTPLATE				04
4	ST44-12-8	. DUCT	V05399			01
		ATTACHING PARTS				
5	MS35842-16	. CLAMP		0501	0519	02
- 5A	NAS1922-0275-1	. CLAMP		0520	& ON	02
		—*—				
6		. PRESSURIZATION-BAGGAGE REFER TO 21-35-00 FIGURE 01				RF
7	6714556-7	. DUCT ASSY-BAGGAGE COMPARTMENT HEAT				01
8	MS27039-1-09	. SCREW				04
9	MS21070L3	. . NUTPLATE				04
10	CM3211-8A3.0	. DUCT 3.00 IN LG BKI				AR
		ATTACHING PARTS				
11	S1891-32	. CLAMP				02
		—*—				
12	6714557-3	. TUBE-BAGGAGE COMPARTMENT HEAT				01
		ATTACHING PARTS				
13	MS27039-1-08	. SCREW				02
14	MS21070L3	. NUTPLATE				02
- 15	6714557-8	. DOUBLER				02
		—*—				
16	ST44-18-14	. DUCT	V05399			02
		ATTACHING PARTS				
17	MS35842-16	. CLAMP				02
		—*—				
18	011598-501	. FAN ASSY-BAGGAGE WARM AIR MK004	V82877			01
		ATTACHING PARTS				
19	AN3-5A	. BOLT				04
20	NAS1149F0332P	. WASHER				04
		—*—				
21	6714557-2	. SUPPORT CHANNEL				01
22	6714557-4	. ANGLE				02
23	6714558-10	. TUBE-BAGGAGE COMPARTMENT HEAT				01
24	6714558-11	. TUBE ASSY-BAGGAGE COMPARTMENT HEAT				01
25	NAS1922-0275-1	. CLAMP				05
26	S1891-48	. CLAMP				02
27	6714553-23	. BRACKET ASSY				01
28	6714553-19	. BRACKET ASSY				01
29	6714553-13	. BRACKET ASSY				01
30	6714558-7	. TUBE ASSY-BAGGAGE COMPARTMENT HEAT				01
31	6714558-19	. FLEX TUBE-BAGGAGE COMPARTMENT HEAT		0501	0519	01
- 31A	6714568-3	. FLEX TUBE-BAGGAGE COMPARTMENT HEAT		0520	& ON	01
32	MS21919DE50	. CLAMP				02
33	MS21919WCH40	. CLAMP				01
- 33A	MS21919WDG40	. CLAMP		0505	& ON	01 R
34	AN3-3A	. BOLT				01 R
35	MS21043-3	. NUT		0501	0504	01 R
- 35A	MS21043-3	. NUT		0505	& ON	02 R
36	MS21070L3	. NUTPLATE		0501	0504	01 R

- ITEM NOT ILLUSTRATED

A85203

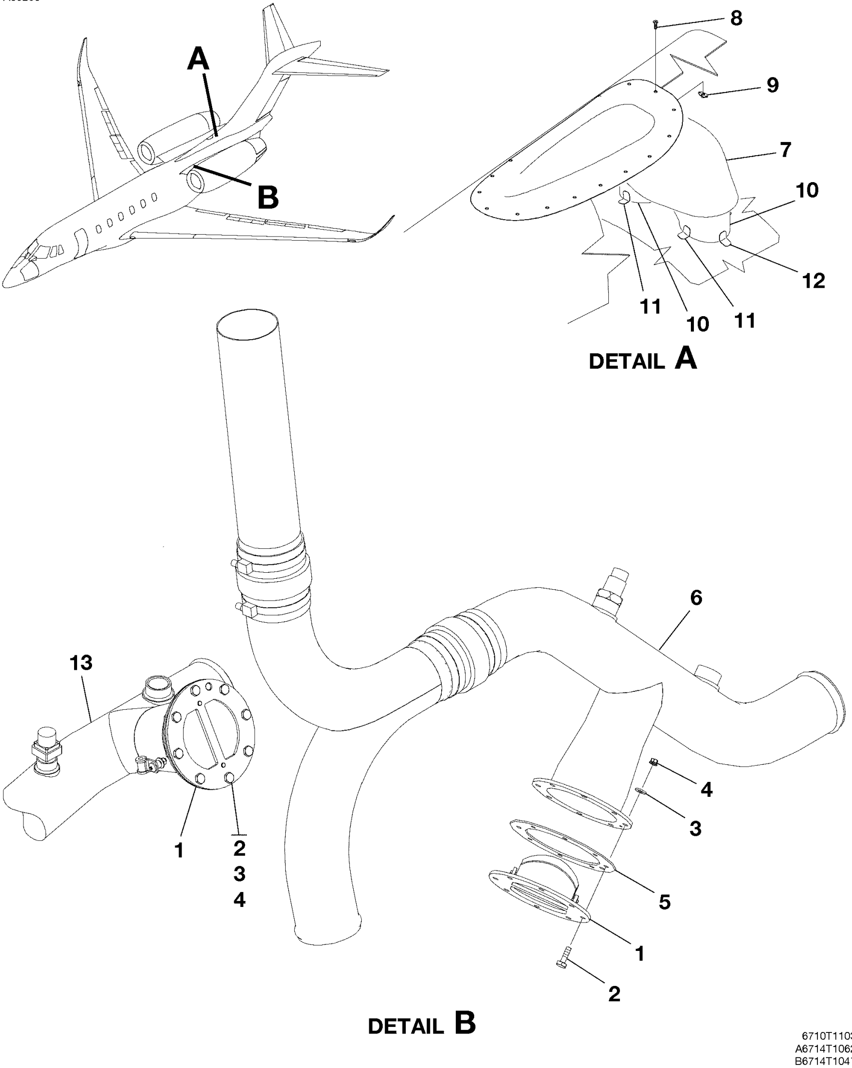

RAM AIR/FRESH AIR DISTRIBUTION
FIGURE 01 (SHEET 1)

FIG ITEM	PART NUMBER	NOMENCLATURE 1 2 3 4 5 6 7	UNITS PER ASSY
01			
-		RAM AIR/FRESH AIR DISTRIBUTION	RF
1	9914132-1	. VALVE ASSY-FRESH AIR CHECK	02
		ATTACHING PARTS	
2	AN3-4A	. BOLT	08
3	NAS1149F0363P	. WASHER	08
4	MS21042L3	. NUT	08
		—*—	
5	6215308-1	. GASKET-FRESH AIR CHECK VALVE	02
6		. COOL AIR DISTRIBUTION-TAILCONE REFER TO 21-23-00 FIGURE 01	RF
7	6712224-13	. SCOOP-RAM AIR	01
		ATTACHING PARTS	
8	NAS7503U3	. BOLT	18
9	MS21060L3	. NUTPLATE	18
- 9A	NAS1791C3-1	. NUTPLATE ALT FOR MS21060L3	18
- 9B	NAS686C3M	. NUTPLATE ALT FOR MS21060L3	18
		—*—	
10	6712224-9	. NOZZLE-ACM AIR INLET	02
11	6712224-11	. CLIP-ACM AIR INLET	04
12	6712224-12	. CLIP-ACM AIR INLET	02
13		. TUBE ASSY-WARM AIR DISTRIBUTION REFER TO 21-25-00 FIGURE 01 . .	RF

- ITEM NOT ILLUSTRATED

A88297

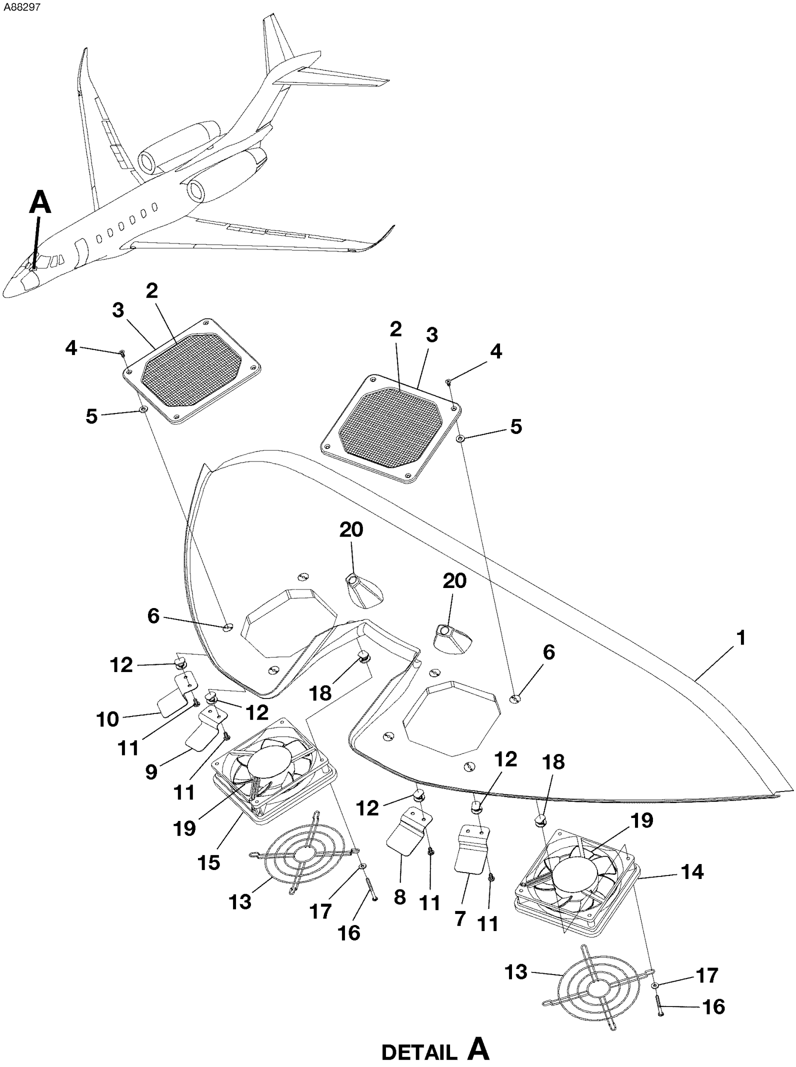

INSTRUMENT PANEL COOLING
FIGURE 01 (SHEET 1)

FIG ITEM	PART NUMBER	NOMENCLATURE 1 2 3 4 5 6 7		UNITS PER ASSY
01				
-		INSTRUMENT PANEL COOLING		RF
1		. GLARESHIELD DECK REFER TO NOTE 1		RF
2	6619024-5	. FAN GRILL		02
3	6719636-6	. FAN GRILL FRAME		02
		ATTACHING PARTS		
4	MS24693-S25	. SCREW		04
5	NAS1149F0363P	. WASHER		04
6	NAS1832-06-3	. INSERT		04
		—*—		
7	6719636-15	. DECK CLIP-LH OUTBD		01
8	6719636-13	. DECK CLIP-LH INBD		01
9	6719636-14	. DECK CLIP-RH INBD		01
10	6719636-16	. DECK CLIP-RH OUTBD		01
		ATTACHING PARTS		
11	MS27039-0805	. SCREW		02
12	NAS1832-08-3	. INSERT		02
		—*—		
13	5504FINGER-GUARD	. FINGER GUARD	V23936	02
14	4419036-33	. FAN ASSEMBLY-LH MC001		01
15	4419036-33	. FAN ASSEMBLY-RH MF001		01
		ATTACHING PARTS		
16	NAS601-26	. SCREW		04
17	NAS1149FN632P	. WASHER		04
18	NAS1832-06-3	. INSERT		04
		—*—		
19	9G1224A4M03	. . COOLING FAN-24 V	V3CYG3	01
20		. ICE DETECTION LIGHT REFER TO 33-40-30 FIGURE 01		RF

NOTE 1—REFER TO MODEL TEN INTERIOR MAINTENANCE MANUAL AND PARTS CATALOG.

- ITEM NOT ILLUSTRATED

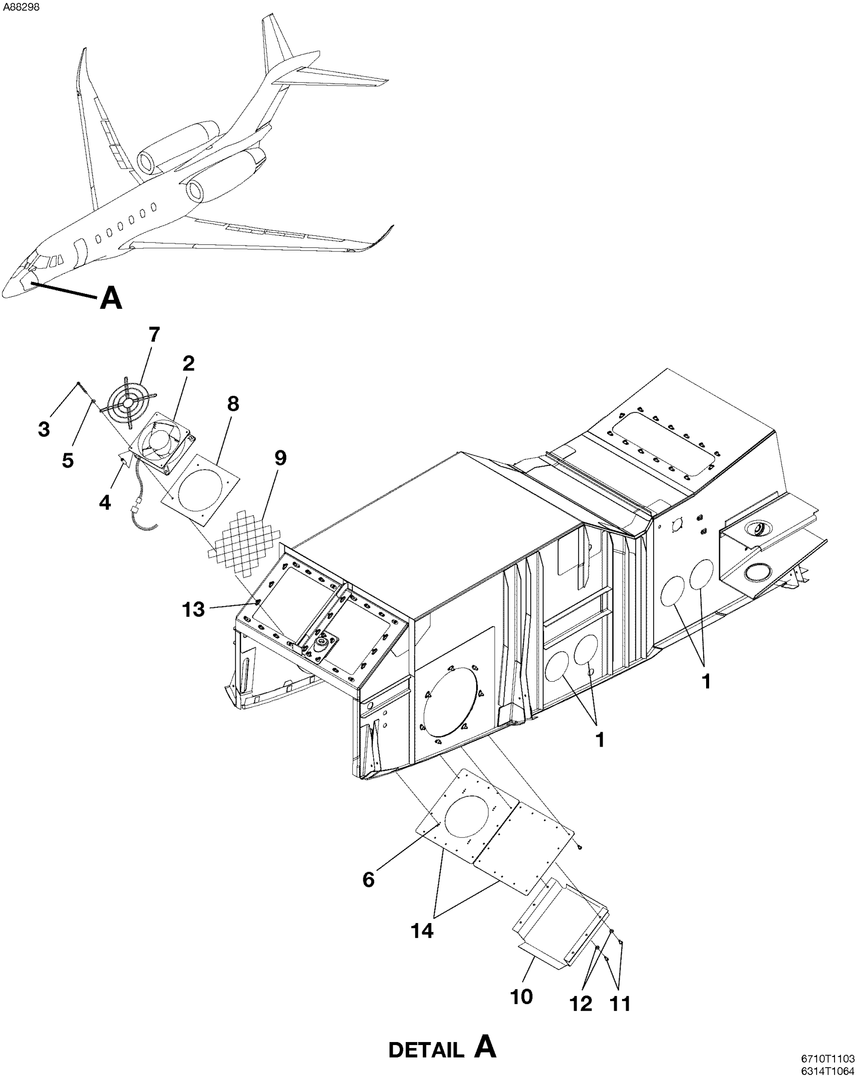

NOSE AVIONICS COOLING
FIGURE 01 (SHEET 1)

FIG ITEM	PART NUMBER	NOMENCLATURE 1 2 3 4 5 6 7		UNITS PER ASSY
01				
-		NOSE AVIONICS COOLING		RF
1	6791253-3	. SIDE PANEL		08
2	011499000	. FAN-AVIONICS COOLING MN304	V61349	01
		ATTACHING PARTS		
3	MS35206-238	. SCREW		04
4	NAS43DD3-75N	. SPACER		04
5	NAS1149FN616P	. WASHER		04
6	MS21075L06N	. NUTPLATE		04
		—*—		
7	5504FINGER-GUARD	. FINGER GUARD	V23936	01
8	9560006-2	. DOUBLER		01
9	9560006-3	. SCREEN		01
10	6713008-26	. SHROUD FAN		01
		ATTACHING PARTS		
11	MS27039-0806	. SCREW		06
12	NAS1149FN816P	. WASHER		06
13	MS21069L08	. NUTPLATE		06
		—*—		
14		. NOSE WHEELWELL ASSY REFER TO 53-15-00 FIGURE 02		RF

- ITEM NOT ILLUSTRATED

A88311

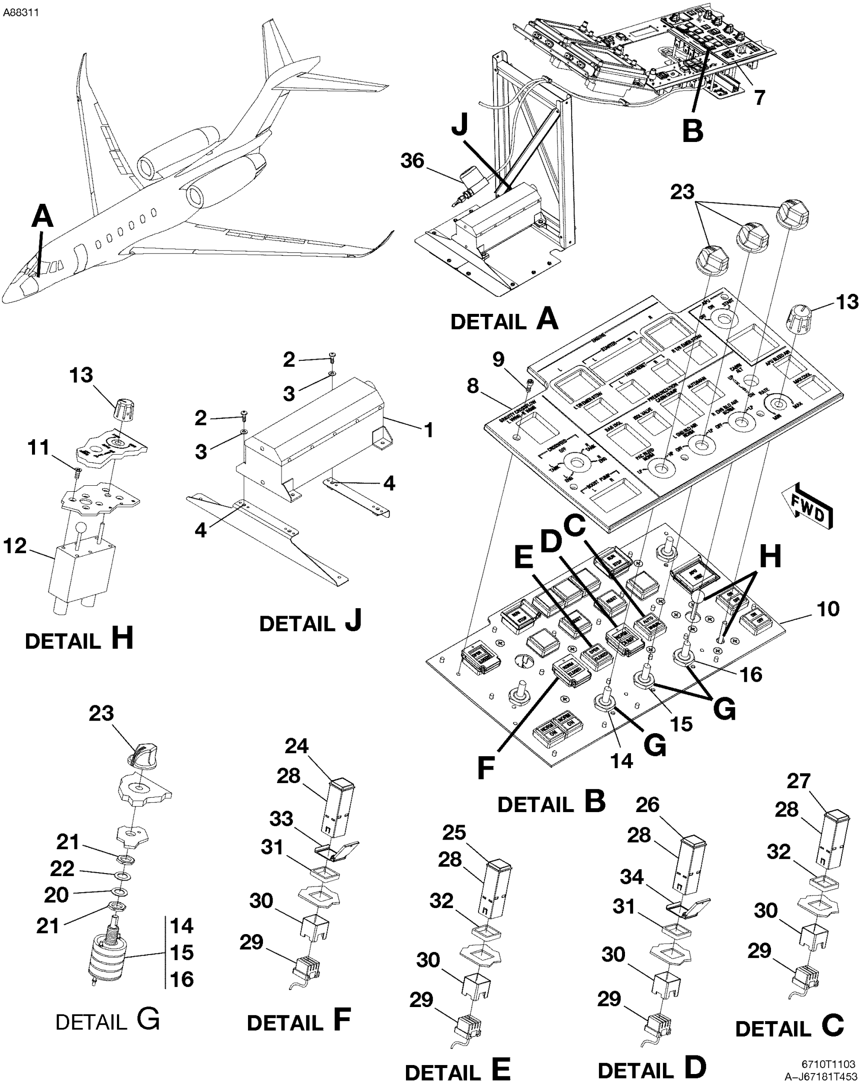

PRESSURIZATION CONTROL SYSTEM
FIGURE 01 (SHEET 1)

FIG ITEM	PART NUMBER	NOMENCLATURE 1 2 3 4 5 6 7		UNITS PER ASSY
01				
-		PRESSURIZATION CONTROL SYSTEM		RF
1	9914487-11	. CONTROLLER-CABIN UF005		01
		ATTACHING PARTS		
2	MS27039-1-09	. SCREW		04
3	NAS1149F0332P	. WASHER		04
4	MS21060-3	. NUTPLATE		04
- 5	NAS1791C3-1NP	. NUTPLATE ALT FOR MS21060-3		04
- 6	NAS686C3	. NUTPLATE ALT FOR MS21060-3		04
		—*—		
7		. LIGHTING AND PEDESTAL LIGHT EMITTING DIODE (LED) PANEL REFER TO 33-10-20 FIGURE 01		RF
8	9509120-8	. PANEL ASSY		01
		ATTACHING PARTS		
9	NAS1352-04-8	. SCREW		05
		—*—		
10	8909133-33	. . PANEL		01
		ATTACHING PARTS		
11	MS24693-S26	. . SCREW		12
		—*—		
12	9914183-12	. . MANUAL CONTROL VALVE UI005		01
13	S3216B2	. . KNOB		01
14	A60-1-2B3N	. . SWITCH-PAC BLEED NORM SI064	V91812	01
15	S3200-1	. . ROTARY SWITCH-L ENG BLD AIR NORM SI065		01
16	S3200-1	. . ROTARY SWITCH-R ENG BLD AIR NORM SI066		01
- 17		. . . DELETED-NOT USED		R
- 18		. . . DELETED-NOT USED		R
- 19		. . . DELETED-NOT USED		R
20	AN936A616	. . . WASHER		01
21	MS25082-7	. . . NUT		AR
22	2018-29	. . . LOCKING RING		01
23	S3217B2	. . KNOB		03
24	46863-031	. . SWITCH-NORM/CLOSED SI060	V81590	01
25	46863-032	. . SWITCH-OPEN/CLOSED SI061	V81590	01
26	46863-028	. . SWITCH-NORM/DUMP SI062	V81590	01
27	46863-026	. . SWITCH-AUTO/MANUAL SI063	V81590	01
28	27489	. . . 389 LED SWITCH ASSY	V81590	01
29	44387-001	. . . SWITCH CONNECTOR	V81590	01
30	29709-001	. . . MOUNTING SLEEVE	V81590	01
31	29102-011	. . . FLIPGUARD SPACER-USED WITH 46863-028 AND 46863-031	V81590	01
32	27478-001	. . . SPACER-USED WITH 46863-026 AND 46863-032	V81590	01
33	29103-004	. . . FLIP GUARD - YELLOW-USED WITH 46863-031	V81590	01
34	29103-003	. . . FLIP GUARD - RED-USED WITH 46863-028	V81590	01
- 35	9569119-1	. . HARNESS ASSY-PEDESTAL CENTER PANEL		01
36		. VACUUM REGULATOR REFER TO 21-31-00 FIGURE 01		RF

- ITEM NOT ILLUSTRATED

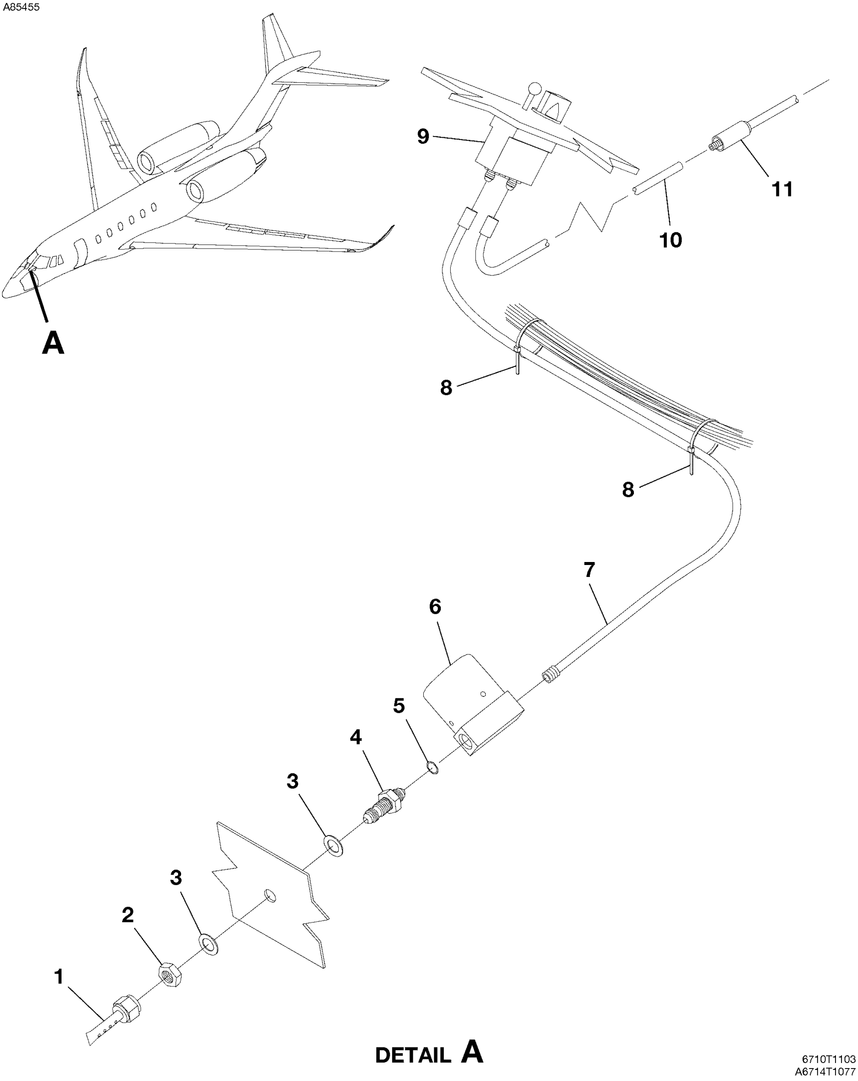

FORWARD PRESSURIZATION CONTROL SYSTEM
FIGURE 01 (SHEET 1)

FIG ITEM	PART NUMBER	NOMENCLATURE 1 2 3 4 5 6 7	UNITS PER ASSY
01			
-		FORWARD PRESSURIZATION CONTROL SYSTEM	RF
1	5617115-1	. TUBE ASSY-STATIC	01
2	AN924-4D	. NUT	02
3	NAS1149D0732K	. WASHER	02
4	AN832-4D	. UNION	01
5	MS29512-04	. O-RING	01
6	9914183-8	. VACUUM REGULATOR-PRESSURIZATION	01
7	6714321-7	. LINE-PRESSURIZATION	01
8	S2209-1	. TIE STRAP	AR
9		. PRESSURIZATION CONTROL SYSTEM REFER TO 21-30-00 FIGURE 01 . . .	RF
10	6714321-8	. LINE-PRESSURIZATION	01
11		. PRESSURIZATION-AFT REFER TO 21-33-00 FIGURE 01	RF

- ITEM NOT ILLUSTRATED

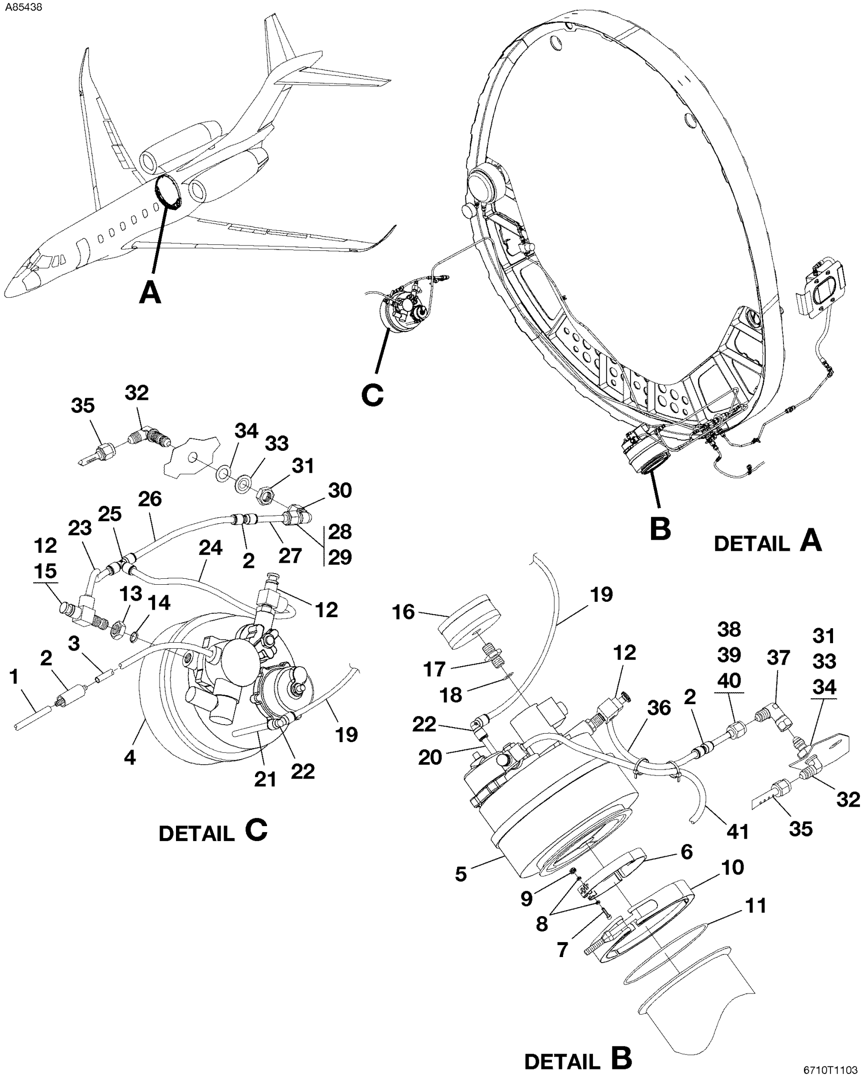

AFT PRESSURIZATION CONTROL SYSTEM
FIGURE 01 (SHEET 1)

FIG ITEM	PART NUMBER	NOMENCLATURE 1 2 3 4 5 6 7		UNITS PER ASSY
01				
-		AFT PRESSURIZATION CONTROL SYSTEM		RF
1		. PRESSURIZATION-FORWARD REFER TO 21-31-00 FIGURE 01		RF
2	3106-56-00	. UNION	V84834	01
3	6715301-4	. LINE PRESSURIZATION		01
4	9914183-15	. VALVE ASSY-SECONDARY RELIEF OUTFLOW VF002		01
5	9914183-14	. VALVE ASSY-PRIMARY RELIEF OUTFLOW VC003		01
6	147543-1	. . NOISE SUPRESSION SCREEN	V64547	03
		ATTACHING PARTS		
7	NAS1352-04-8P	. . SCREW		01
8	NAS620-4	. . WASHER		02
9	MS21083N04	. . NUT		01
		—*—		
10	4573-400	. COUPLING-T-BOLT LATCH	V00624	02
11	MS29513-243	. SEAL		02
12	290C4	. BLEED VALVE ASSY PRESSURIZATION	V91511	04
13	AN924-4D	. NUT		04
14	MS29512-04	. O-RING		04
15	MS24665-105	. COTTER PIN		04
16	9914183-7	. AIR FILTER PRESSURIZATION		01
17	MS21902D4	. UNION		01
18	MS29512-04	. O-RING		02
19	6715301-8	. LINE-PRESSURIZATION		01
20	6715301-13	. LINE-PRESSURIZATION		01
21	6715301-14	. LINE-PRESSURIZATION		01
22	3102-56-00	. UNION		02
23	6714321-9	. LINE-PRESSURIZATION		01
24	6714321-10	. LINE-PRESSURIZATION		01
25	3104-56-00	. TEE	V84834	01
26	6715301-7	. LINE-PRESSURIZATION		01
27	6714360-5	. TUBE PRESSURIZATION		01
28	AN818-4D	. NUT		01
29	MS20819-4D	. SLEEVE		01
30	MS51521B4	. ELBOW		01
31	AN924-4D	. NUT		02
32	AN833-4D	. ELBOW		02
33	NAS1149D0716J	. WASHER		02
34	250-215-4	. SEAL	V83259	02
35	5617115-1	. TUBE ASSY-VACUUM REGULATOR		02
36	6715301-12	. LINE-PRESSURIZATION		01
37	MS51521B4	. ELBOW		01
38	6714360-5	. TUBE-PRESSURIZATION		01
39	AN818-4D	. NUT		01
40	MS20819-4D	. SLEEVE		01
41		. PRESSURIZATION-BAGGAGE REFER TO 21-35-00 FIGURE 01		RF

- ITEM NOT ILLUSTRATED

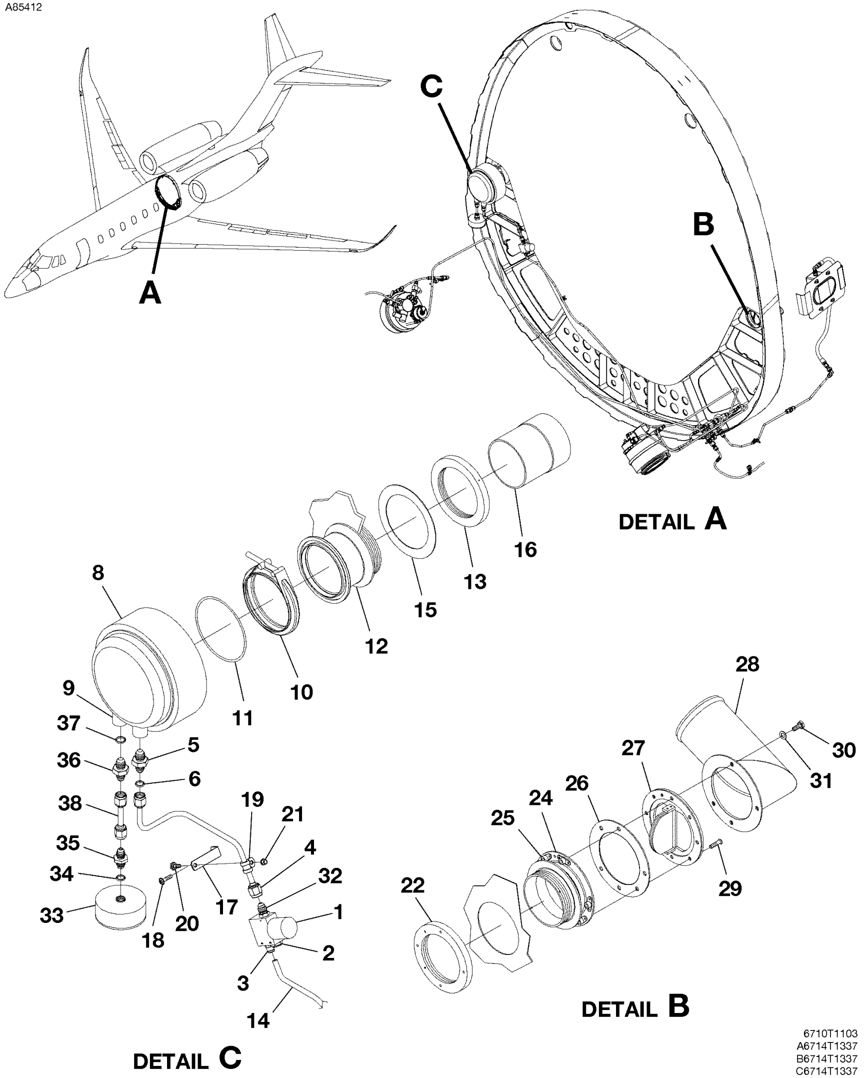

BAGGAGE COMPARTMENT PRESSURIZATION CONTROL SYSTEM
FIGURE 01 (SHEET 1)

FIG ITEM	PART NUMBER	NOMENCLATURE 1 2 3 4 5 6 7				UNITS PER ASSY
01						
-		BAGGAGE COMPARTMENT PRESSURIZATION CONTROL SYSTEM				RF
1	5303-2A	. VALVE-SOLENOID VQ001	V34163			01
2	15080-ENP	. MUFFLER	V90526			01
3	3175-56-11	. ADAPTER	V58755			01
4	6715005-2	. TUBE ASSY-PRESSURIZATION				01
5	AS5174D0504	. REDUCER				01
6	MS29512-05	. O-RING				02
- 7	6714321-1	. BAGGAGE ISOLATION VALVE				01
8	9914487-12	. . ISOLATION VALVE-PRESSURIZATION				01
9	14523-5	. . . AIR FILTER ASSY	V64547			01
10	4573-300	. COUPLING	V00624			01
11	MS29513-235	. O-RING				01
12	6715302-3	. ISOLATION VALVE SUPPORT-PRESSURIZATION				01
13	6715302-4	. PIN SPANNER NUT				01
14		. VACUUM SYSTEM REFER TO 37-10-00 FIGURE 01				RF
15	6715302-6	. WASHER-ISOLATION VALVE SUPPORT				01
16	6715302-5	. INSERT-ISOLATION VALVE SUPPORT				01
17	MS9596-067	. BRACKET				01
		ATTACHING PARTS				
18	AN525-832R11	. SCREW				01
		—*—				
19	MS21919WDF4	. CLAMP				01
		ATTACHING PARTS				
20	AN3-3A	. BOLT				01
21	MS21042-3	. NUT				01
		—*—				
22	6714044-8	. NUT				01
- 23	6714044-10	. HOUSING ASSY		0501	0519	01
- 23A	6714321-18	. HOUSING ASSY		0520	& ON	01
24	6714044-12	. . CHECK VALVE SUPPORT ASSY		0501	0519	01
- 24A	6714321-19	. . CHECK VALVE SUPPORT ASSY		0520	& ON	01
25	MS21047-3	. . . NUTPLATE				06
26	6215308-1	. . GASKET				01
27	6714044-9	. . CHECK VALVE		0501	0519	01
- 27A	6714321-21	. . CHECK VALVE		0520	& ON	01
28	6714044-4	. . TUBE ASSY				01
29	CM3738-8	. . SCREW				02
30	AN3-4A	. . BOLT		0501	0519	04
- 30A	AN3-5A	. . BOLT		0520	& ON	04
31	NAS1149F0332P	. WASHER				04
32	AS5194D0402	. ADAPTER				01
33	9914183-7	. AIR FILTER				01
34	MS29512-04	. O-RING				01
35	6714321-16	. UNION ASSY				01
36	AN919-3D	. REDUCER				01
37	MS29512-05	. O-RING				01
38	6714023-21	. TUBE ASSY				01

- ITEM NOT ILLUSTRATED

A85413

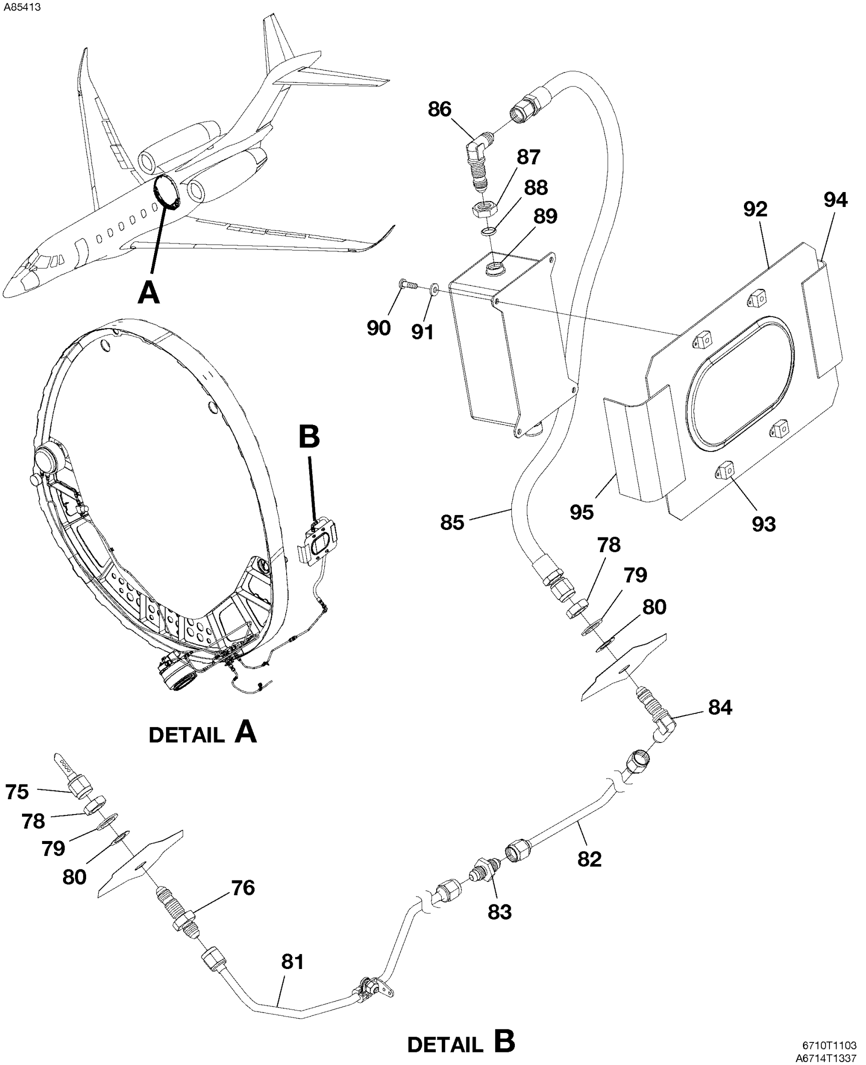

BAGGAGE COMPARTMENT PRESSURIZATION CONTROL SYSTEM
FIGURE 01 (SHEET 2)

FIG ITEM	PART NUMBER	NOMENCLATURE 1 2 3 4 5 6 7		UNITS PER ASSY
01				
75	5617115-1	. TUBE ASSY-PRESSURIZATION		01
76	AN832-4D	. UNION		01
- 77	MS24393D4	. UNION ALT FOR AN832-4D		01
78	AN924-4D	. NUT		02
79	NAS1149D0716J	. WASHER		02
80	250-215-4	. SEAL	V83259	02
81	6714321-5	. TUBE ASSY-PRESSURIZATION		01
82	6714321-6	. TUBE ASSY-PRESSURIZATION		01
83	AS5174D0404	. UNION		01
84	AN833-4D	. ELBOW		01
85	CM2944-4-24.00	. HOSE ASSY-PRESSURIZATION		01
86	AN833-4D	. ELBOW		01
87	AN924-4D	. NUT		01
88	MS29512-04	. O-RING		01
89	9914487-14	. ANEROID ASSY-PRESSURIZATION VALVE SK004		01
		ATTACHING PARTS		
90	MS27039-0808	. SCREW		04
91	NAS1149FN816P	. WASHER		04
		—*—		
92	6714360-8	. PLATE ASSY-ANEROID VALVE MOUNTING		01
93	MS21059L08	. . NUTPLATE		04
94	6714360-3	. BRACKET-AFT MOUNTING		01
95	6714360-4	. BRACKET-FWD MOUNTING		01

- ITEM NOT ILLUSTRATED

A88287

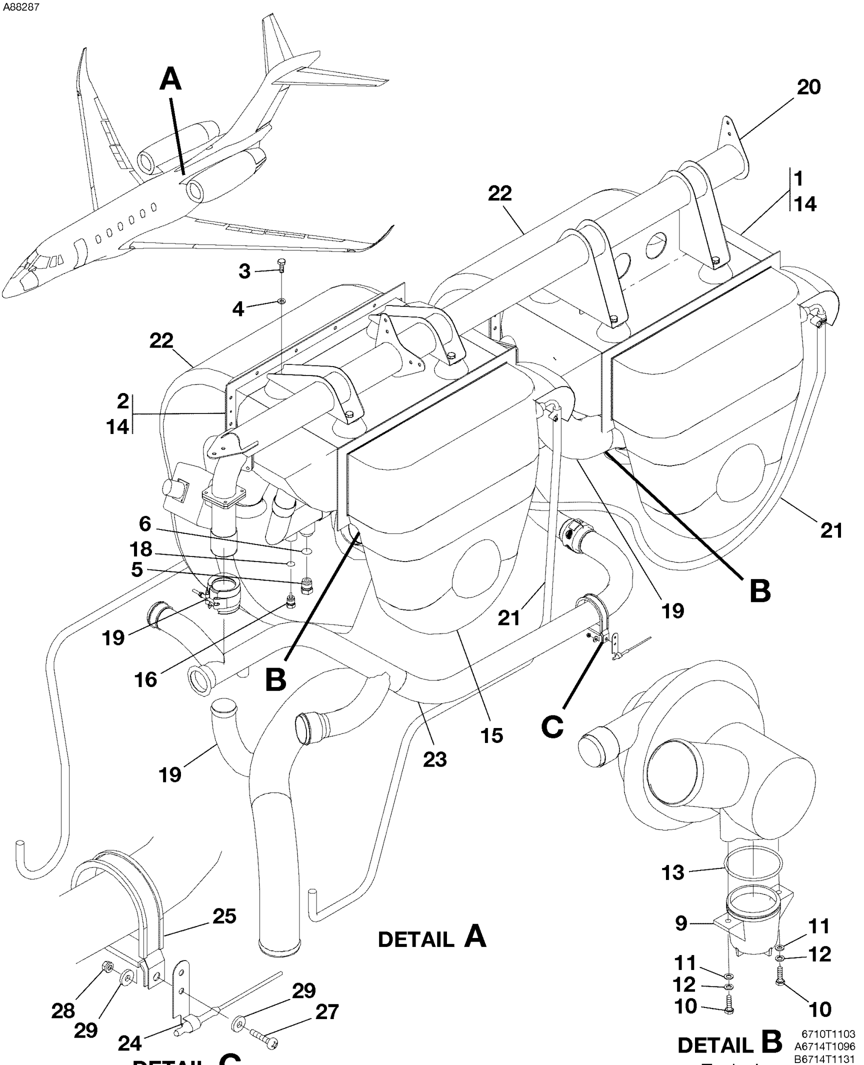

ENVIRONMENTAL CONTROL UNIT
FIGURE 01 (SHEET 1)

FIG ITEM	PART NUMBER	NOMENCLATURE 1 2 3 4 5 6 7		UNITS PER ASSY
01				
-		ENVIRONMENTAL CONTROL UNIT		RF
1	9914495-12	. REFRIGERATION PACKAGE-AFT ST001		01
2	9914495-12	. REFRIGERATION PACKAGE-FWD ST006		01
		ATTACHING PARTS		
3	AN4-6A	. BOLT		04
4	NAS1149F0463P	. WASHER		04
		—*—		
5	746833-2	. . SWITCH-FWD ECU TEMPERATURE CONTROL ST006	V73030	01
6	69494J908	. . O-RING	V73030	01
- 7	746833-2	. . SWITCH-AFT ECU TEMPERATURE CONTROL ST001	V73030	01
- 8	69494J908	. . O-RING	V73030	01
9	821007-1	. . OIL SUMP-ACM	V73030	01
		ATTACHING PARTS		
10	NAS6003U10	. . SCREW		02
11	732128-5	. . WASHER-NON METALLIC	V73030	02
12	NAS620-10L	. . WASHER-METAL		02
		—*—		
13	M83248/1-033	. . O-RING-OIL SUMP		01
14	738384-33	. . AIR CYCLE MACHINE	V73030	01
15	765421-9	. . FAN HOUSING	V73030	01
16	S101813PG	. RTD SENSOR ASSY-FWD ECU TT011		01
- 17	S101813PG	. RTD SENSOR ASSY-AFT ECU TT013		01
18	S3278C5	. O-RING-RTD SENSOR		02
19		. COOL AIR DISTRIBUTION-TAILCONE REFER TO 21-23-00 FIGURE 01		RF
20		. ENVIRONMENTAL CONTROL UNIT SUPPORT REFER TO 21-50-05 FIGURE 01		RF
21		. WATER SEPARATOR REFER TO 21-50-20 FIGURE 01		RF
22		. ENVIRONMENTAL CONTROL UNIT EXHAUST REFER TO 21-50-10 FIGURE 01		RF
23		. BLEED AIR SUPPLY-ENVIRONMENTAL CONTROL UNIT REFER TO 21-21-00 FIGURE 01		RF
24	S101816PG	. SENSOR ASSY-RTD ECU TT017	V09359	01
25	TA713WSC03TM	. CLAMP	V84971	01
- 26	TA713S03TM	. CLAMP ALT FOR TA713WSC03TM	V84971	01
27	MS35206-231	. SCREW		01
28	MS21042L06	. NUT		01
29	NAS1149CN632R	. WASHER		01

- ITEM NOT ILLUSTRATED

A85356

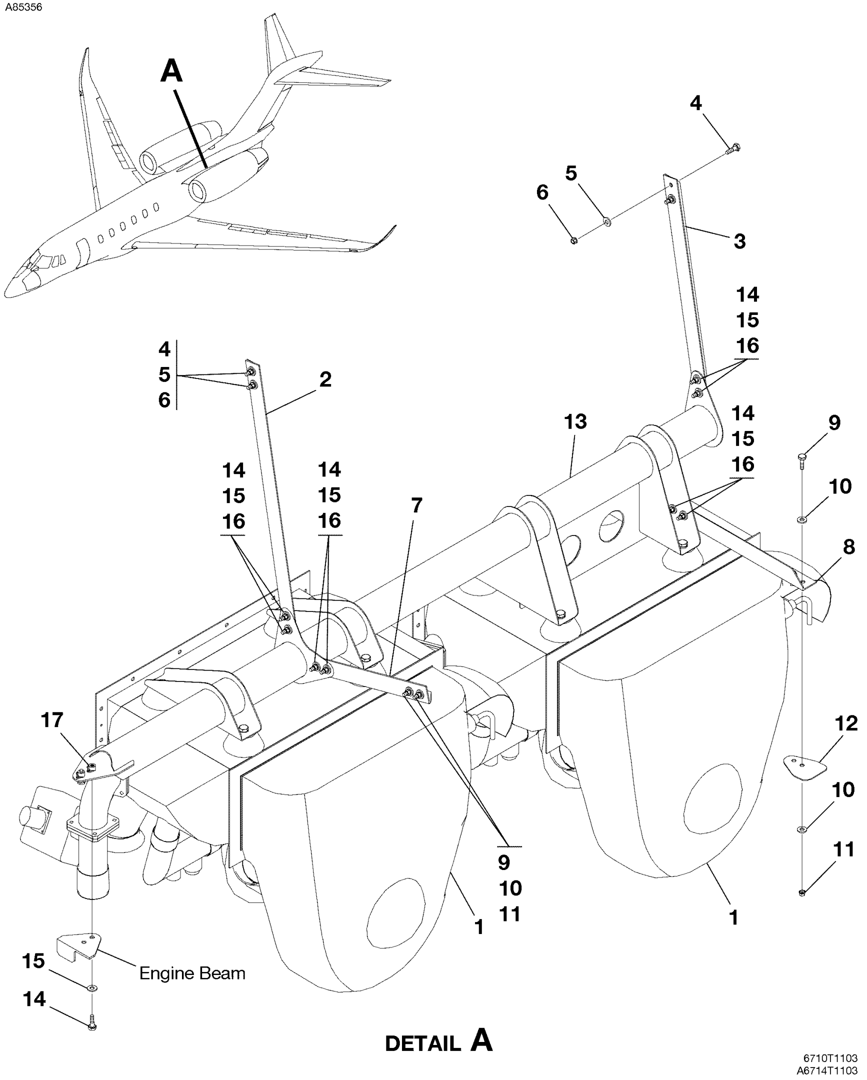

ENVIRONMENTAL CONTROL UNIT SUPPORT
FIGURE 01 (SHEET 1)

FIG ITEM	PART NUMBER	NOMENCLATURE 1 2 3 4 5 6 7	UNITS PER ASSY
01			
-		ENVIRONMENTAL CONTROL UNIT SUPPORT	RF
1		. ENVIRONMENTAL CONTROL UNIT REFER TO 21-50-00 FIGURE 01	RF
2	6714357-6	. ANGLE-ECU FWD MOUNTING	01
3	6714357-21	. ANGLE-ECU AFT MOUNTING	01
		ATTACHING PARTS	
4	AN3C5A	. BOLT	02
5	NAS1149C0363R	. WASHER	04
6	MS21042L3	. NUT	02
		—*—	
7	6714357-11	. ANGLE-ECU FWD MOUNTING	01
8	6714357-9	. ANGLE-ECU AFT MOUNTING	01
		ATTACHING PARTS	
9	AN3C5A	. BOLT	02
10	NAS1149C0363R	. WASHER	04
11	MS21042L3	. NUT	02
		—*—	
12	6714357-10	. CLIP	01
13	6714357-19	. SUPPORT WELD ASSY-ECU	01
		ATTACHING PARTS	
14	AN3C5A	. BOLT	10
15	NAS1149C0363R	. WASHER	18
16	MS21042L3	. NUT	08
		—*—	
17	MS21075L3N	. . NUTPLATE	02

- ITEM NOT ILLUSTRATED

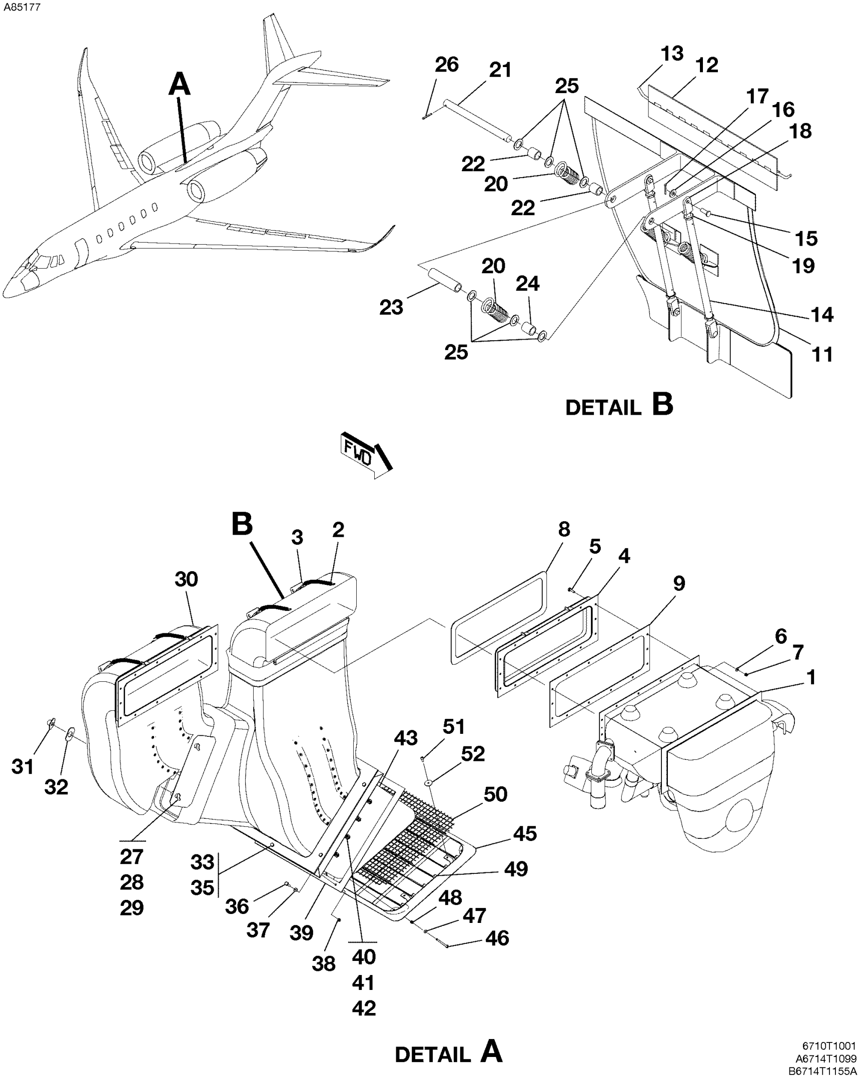

ENVIRONMENTAL CONTROL UNIT EXHAUST DUCT ASSEMBLY
FIGURE 01 (SHEET 1)

FIG ITEM	PART NUMBER	NOMENCLATURE 1 2 3 4 5 6 7	UNITS PER ASSY
01			
-		ENVIRONMENTAL CONTROL UNIT EXHAUST DUCT ASSEMBLY	RF
1		. ENVIRONMENTAL CONTROL UNIT REFER TO 21-50-05 FIGURE 01	RF
2	S2952-8	. SPRING	04
		ATTACHING PARTS	
3	6714351-52	. SPRING HOOK	01
		—*—	
4	6714351-46	. FLANGE ASSY-ECU EXHAUST	02
		ATTACHING PARTS	
5	AN3-4A	. BOLT	14
6	NAS1149F0363P	. WASHER	14
7	MS21042L3	. NUT	14
		—*—	
8	6714351-50	. . FLANGE SEAL	01
9	6214199-4	. GASKET-ECU EXHAUST FLANGE	02
- 10	6714040-1	. EXHAUST DUCT ASSY-ENVIRONMENTAL CONTROL UNIT	01
11	6714040-9	. . DOOR ASSY-ECU EXHAUST	01
12	6714351-30	. . . HINGE ASSY-ECU EXHAUST DOOR	01
13	6714351-31	. . . . HINGE PIN	01
14	6714040-11	. . PUSHROD ASSY-ECU EXHAUST DOOR	02
		ATTACHING PARTS	
15	MS20392-2C13	. . PIN	02
16	NAS1149F0332P	. . WASHER	02
17	MS24665-132	. . COTTER PIN	02
		—*—	
18	6712391-8	. . . CLEVIS	02
19	AN316-4R	. . . NUT	02
20	S2952-23	. . SPRING	02
		ATTACHING PARTS	
21	6714040-23	. . ATTACH PIN	01
22	6714040-29	. . SPACER	02
23	6714040-27	. . SPACER	01
24	6714040-25	. . SPACER	01
25	NAS1149C0632R	. . WASHER	06
26	MS24665-172	. . COTTER PIN	02
		—*—	
27	CM2790-4	. . STUD	04
28	S2319-22	. . GROMMET	04
29	CM2791-1	. . SNAP RING	04
30	6714351-5	. . FWD DUCT ASSY	01
31	S2319-30	. . . RECEPTACLE	04
32	6714351-55	. . . BACKING PLATE	04
33	6714356-46	. TRANSITION SUPPORT ASSY	01
- 34	NAS1149DN332J	. . WASHER	36
35	6714351-10	. LOWER SEAL	01
36	AN3-5A	. BOLT	14
37	NAS1149F0363P	. WASHER	14
38	MS21042L3	. NUT	08
39	6714356-48	. LOWER SEAL	01
40	MS27039C1-07	. SCREW	16
41	NAS1149C0363R	. WASHER	16
42	S1477-3	. NUT-CLIP	16
43	6714352-37	. LOWER DUCT ASSY	01
- 44	MS21070-08	. . NUTPLATE	04
45	6714352-29	. GRILLE ASSY-ECU EXHAUST	01
		ATTACHING PARTS	
46	MS27039C0838	. SCREW	04
47	NAS1149DN832J	. WASHER	04
48	S2951-20	. SPRING	04
		—*—	
49	6714352-21	. . GRILLE WELD ASSY	01
50	6714352-35	. . SCREEN	01
51	MS35206-245	. . SCREW	04
52	S1450-2-14-032	. . WASHER	04

- ITEM NOT ILLUSTRATED

A85166

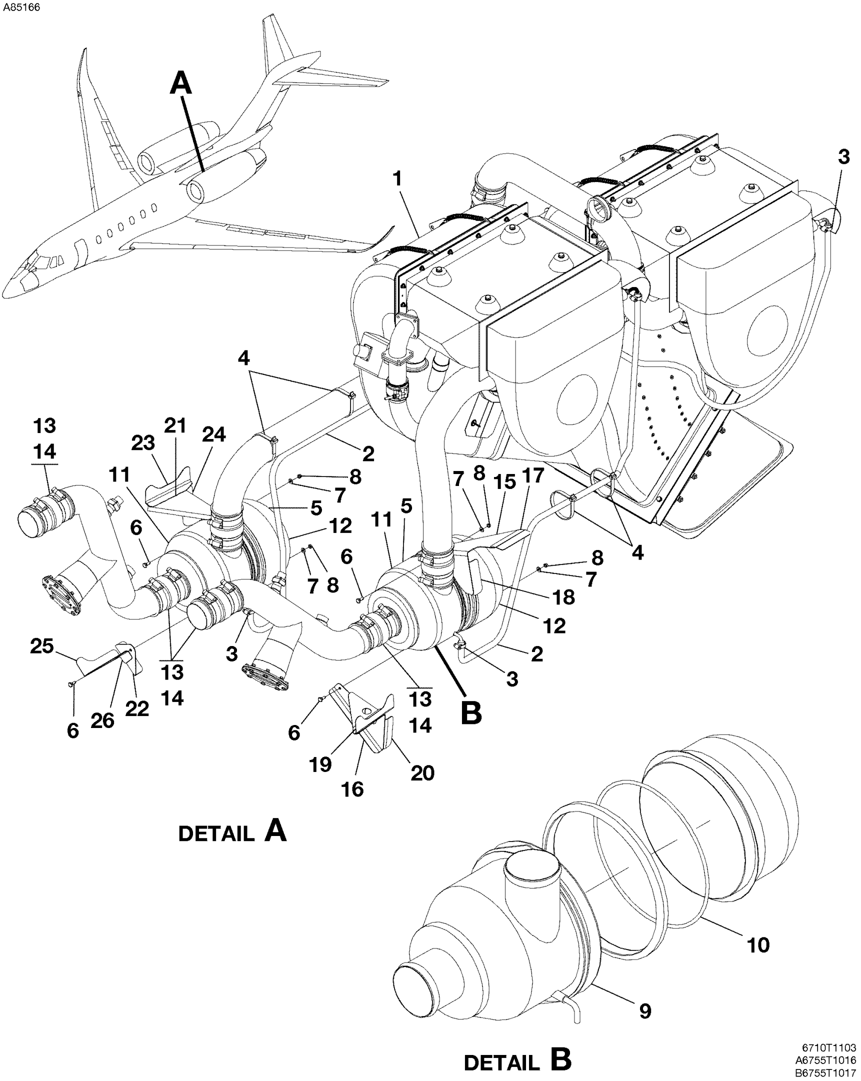

WATER SEPARATOR
FIGURE 01 (SHEET 1)

FIG ITEM	PART NUMBER	NOMENCLATURE 1 2 3 4 5 6 7		UNITS PER ASSY
01				
-		WATER SEPARATOR		RF
1		. ENVIRONMENTAL CONTROL UNIT REFER TO 21-50-00 FIGURE 01		RF
2	M5593-4	. HOSE BKI		AR
3	S2357-1	. CLAMP		03
4	MS3367-3-9	. STRAP		04
5	9914495-6	. WATER SEPARATOR		02
		ATTACHING PARTS		
6	AN3-4A	. BOLT		02
7	NAS1149F0363P	. WASHER		02
8	MS21042L3	. NUT		02
		—*—		
9	746451-3	. . COALESCER	V73030	01
10	69494J439	. . PACKING	V73030	01
11	5715526-8	. INSULATION		01
12	5715526-7	. INSULATION		01
13	S3295-10-15	. COUPLING		04
14	S1891-40	. CLAMP		08
15	6714362-3	. BRACKET-UPR LH		01
16	6714362-5	. BRACKET-LWR LH		01
17	6714362-7	. CLIP-UPR		01
18	6714362-9	. CLIP-UPR		01
19	6714362-13	. CLIP-LWR		01
20	6714362-11	. CLIP-LWR		01
21	6714362-4	. BRACKET-UPR RH		01
22	6714362-6	. BRACKET-LWR RH		01
23	6714362-8	. CLIP-UPR		01
24	6714362-12	. CLIP-UPR		01
25	6714362-14	. CLIP-LWR		01
26	6714362-10	. CLIP-LWR		01

- ITEM NOT ILLUSTRATED

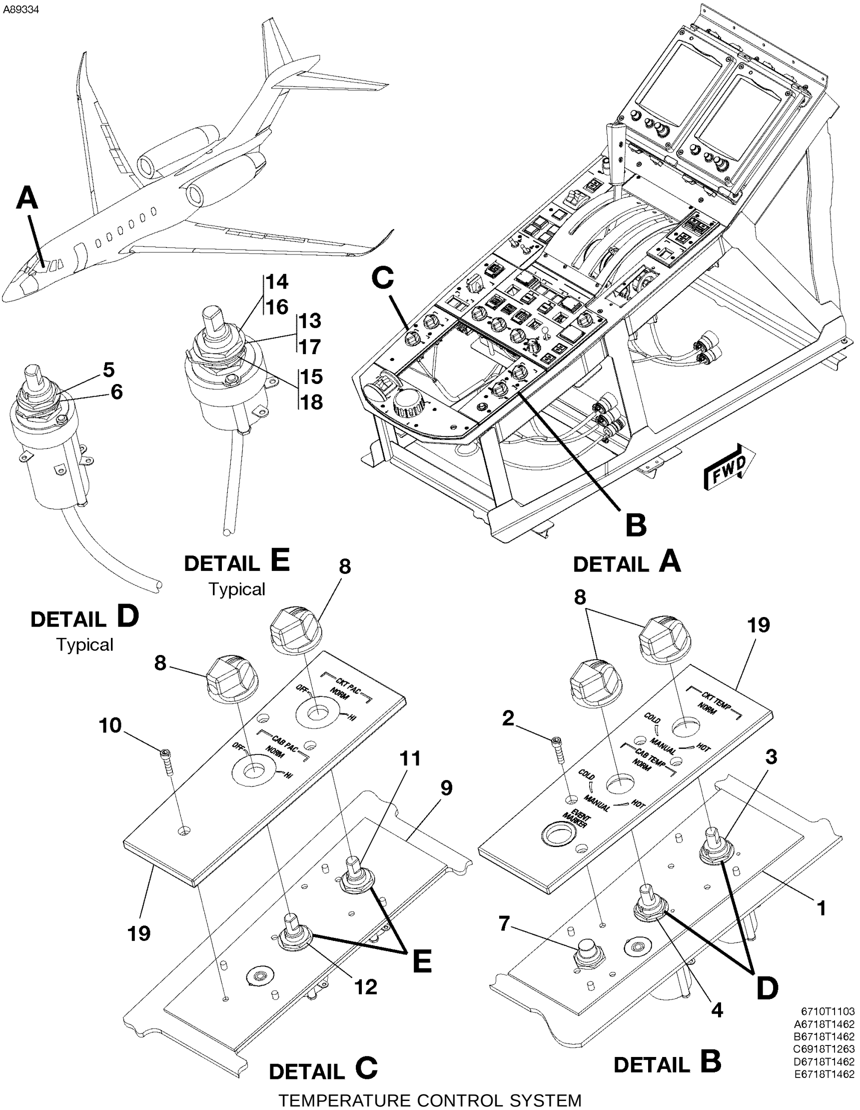

TEMPERATURE CONTROL SYSTEM
FIGURE 01 (SHEET 1)

FIG ITEM	PART NUMBER	NOMENCLATURE 1 2 3 4 5 6 7		UNITS PER ASSY
01				
-		TEMPERATURE CONTROL SYSTEM		RF
1	8909132-6	. PANEL ASSY-AFT RH PEDESTAL		01
		ATTACHING PARTS		
2	NAS1352-04-8	. SCREW		04
		—*—		
3	24455	. . ROTARY SPRING LOADED SI067	V81579	01
4	24455	. . ROTARY SPRING LOADED SI068	V81579	01
5	MS25082-C8	. . . NUT		01
6	MS35333-136	. . . WASHER		01
7	S3178-1	. . PUSHBUTTON SWITCH SI069		01
8	S3217B2	. KNOB		04
9	9509120-4	. PANEL ASSY-AFT LH PEDESTAL		01
		ATTACHING PARTS		
10	NAS1352-04-8	. SCREW		03
		—*—		
11	A60-1-2B3N	. . SWITCH SI070	V91812	01
12	A60-1-2B3N	. . SWITCH SI071	V91812	01
		ATTACHING PARTS		
13	MS35333-126	. . WASHER		AR
14	MS25082-8	. . NUT		AR
15	52-2050	. . KEYWAY WASHER	V81640	AR
		—*—		
16	MS25082-7	. . . NUT		01
17	MS35333-42	. . . WASHER		01
18	2018-29	. . . LOCKING RING		01
19		. LED PANEL REFER TO 33-10-20 FIGURE 01		RF

- ITEM NOT ILLUSTRATED

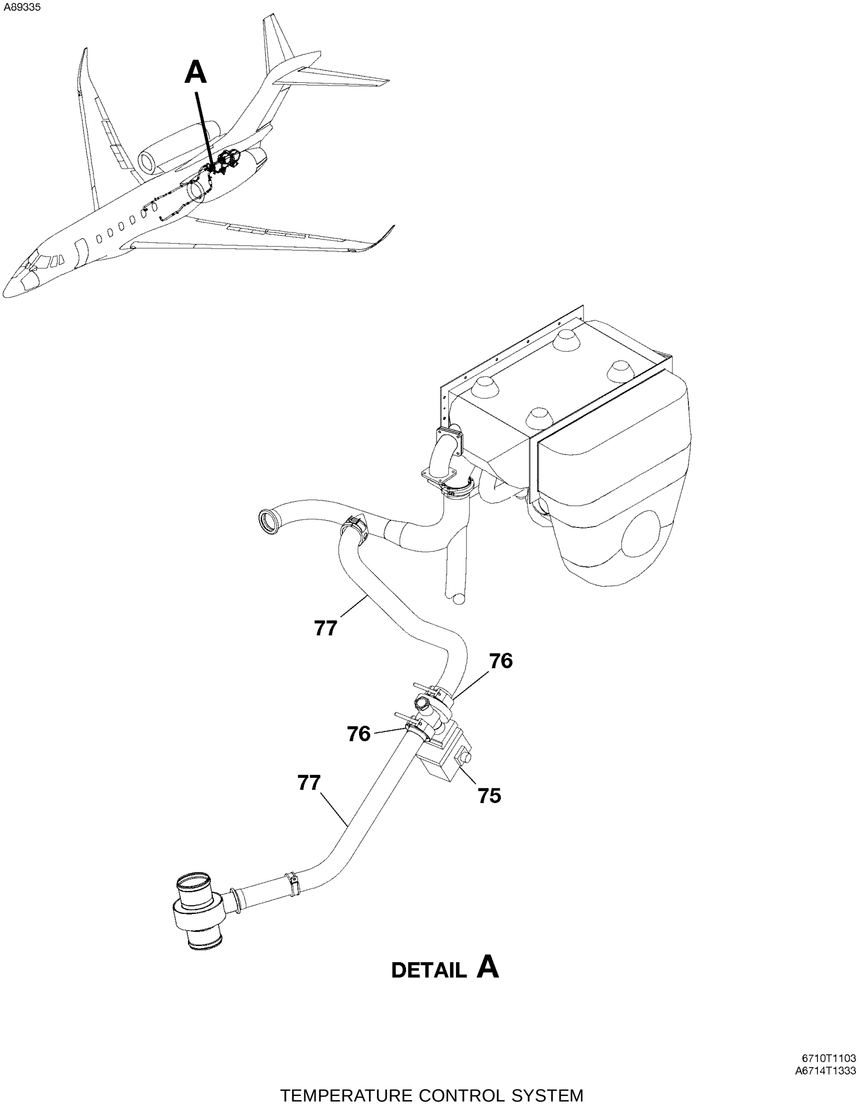

TEMPERATURE CONTROL SYSTEM
FIGURE 01 (SHEET 2)

FIG ITEM	PART NUMBER	NOMENCLATURE 1 2 3 4 5 6 7	UNITS PER ASSY
01			
75	9912518-2	. TEMPERATURE CNTROL VALVE VT041	01
		ATTACHING PARTS	
76	NM102420-0150	. COUPLING V-BAND	02
		—*—	
77		. TUBE ASSY-WARM AIR DISTRIBUTION REFER TO21-25-00 FIGURE 01 . . .	RF

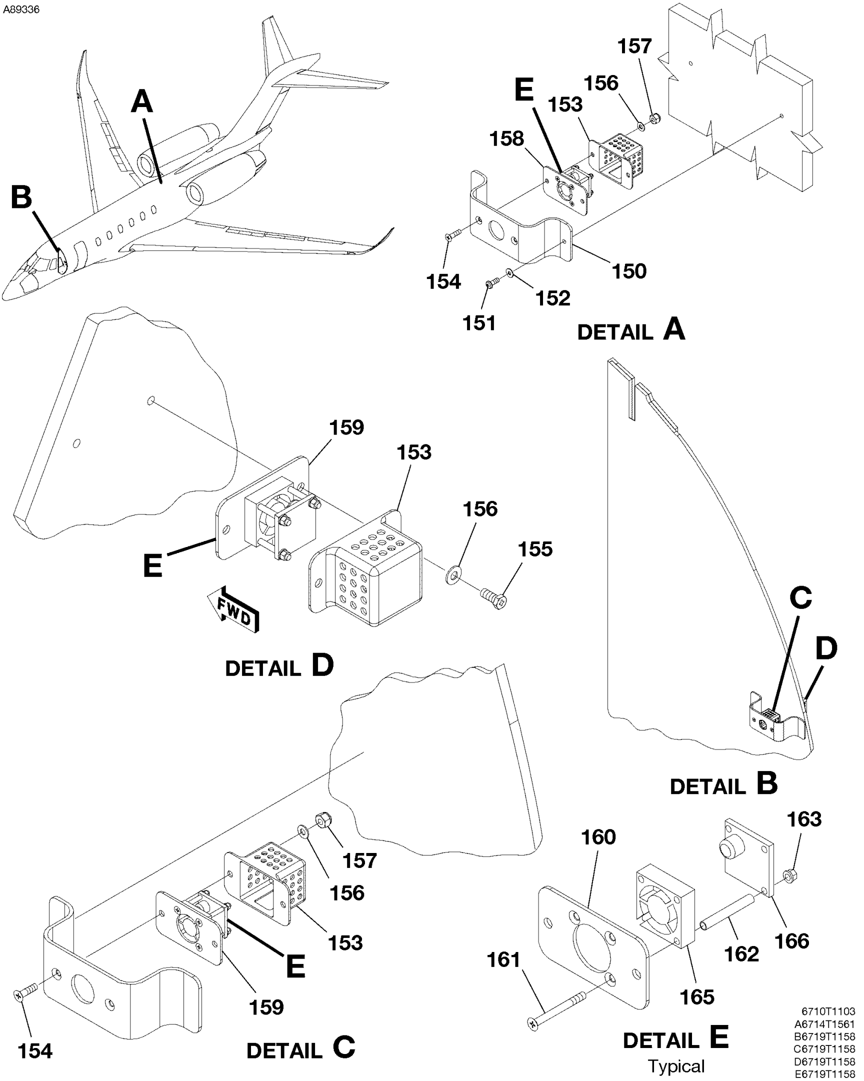

TEMPERATURE CONTROL SYSTEM
FIGURE 01 (SHEET 3)

FIG ITEM	PART NUMBER	NOMENCLATURE 1 2 3 4 5 6 7		UNITS PER ASSY
01				
150	6719685-1	. TEMP SENSOR BRACKET-CABIN		01
		ATTACHING PARTS		
151	NAS602-8	. SCREW		02
152	NAS1149FN632P	. WASHER		02
		—*—		
- 152A	6719508-2	. GASKET-TEMPERATURE SENSOR		01
153	600-442001-01	. TEMP SENSOR COVER-CABIN AND COCKPIT	V1TLL9	02
		ATTACHING PARTS		
154	MS24693-C51	. SCREW-CABIN AND COCKPIT W/DOOR		02
155	NAS1801-08-6	. SCREW-COCKPIT W/CURTAIN		02
156	NAS1149DN832K	. WASHER		02
157	MS21044C08	. NUT-CABIN AND COCKPIT W/DOOR		02
		—*—		
158	7115070-10	. TEMP SENSOR ASSY-CABIN UC029		01
159	7115070-10	. TEMP SENSOR ASSY-COCKPIT UF013		01
160	7115070-6	. . MOUNTING PLATE		01
		ATTACHING PARTS		
161	MS24693-C11	. . SCREW		03
162	NAS43DD0-32FC	. . SPACER		03
163	MS21042-04	. . NUT		03
		—*—		
- 164	8718950-2	. . TEMPERATURE/HUMIDITY PCB		01
165	255H	. . . FAN M1	V62292	01
166	8718984-9	. . . HUMIDITY/ZONE TEMP ASSY N1		01

- ITEM NOT ILLUSTRATED

A85236

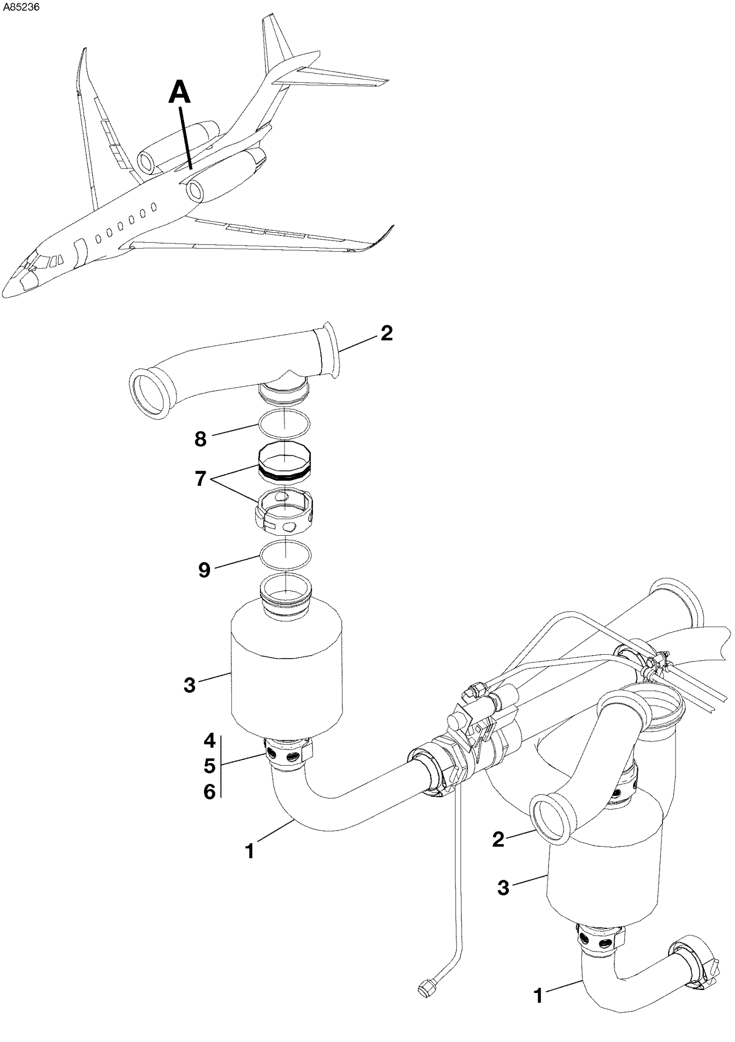

DETAIL A

6710T1001
A6714T1045

OZONE CONVERTER
FIGURE 01 (SHEET 1)

FIG ITEM	PART NUMBER	NOMENCLATURE 1 2 3 4 5 6 7		UNITS PER ASSY
01				
-		OZONE CONVERTER		RF
1		. BLEED AIR SUPPLY-ENVIRONMENTAL CONTROL UNIT REFER TO 21-21-00 FIGURE 01		RF
2		. BLEED AIR DISTRIBUTION-LOW PRESSURE REFER TO 36-10-20 FIGURE 04		RF
3	9914523-4	. OZONE CONVERTER ATTACHING PARTS		02
4	W991-24TE	. COUPLING-LOWER	V79326	01
5	W932-24B	. SEAL ASSY-LOWER	V79326	01
6	AS3582-222	. O-RING-LOWER		01
7	W991-32TE	. COUPLING-UPPER	V79326	01
8	W932-32B	. SEAL ASSY-UPPER	V79326	01
9	AS3582-226	. O-RING-UPPER —*—		01

- ITEM NOT ILLUSTRATED

CHAPTER

22

AUTO FLIGHT

CHAPTER SECTION SUBJECT		NUMBER OF PAGES	DATE
22 - TITLE			
22 - LIST OF EFFECTIVE PAGES			
22 - RECORD OF TEMPORARY REVISIONS			
22 - TABLE OF CONTENTS			
22-10-05	Figure 01	2	May 1/2014
22-10-10	Figure 01	2	May 1/2014
22-10-10	Figure 02	2	May 1/2014
22-10-30	Figure 01	2	May 1/2014

© Cessna Aircraft Company

SUBJECT	CHAPTER SECTION SUBJECT	FIGURE	EFFECTIVITY START	EFFECTIVITY END
GMC-7200 AFCS MODE CONTROLLER	22-10-05	01		
AUTOPILOT SERVO - AILERON ROLL	22-10-10	01		
AUTOPILOT SERVO - ELEVATOR PITCH	22-10-10	02		
GARMIN GAC 9200 ACTUATOR CONTROLLER	22-10-30	01		

© Cessna Aircraft Company

A87320

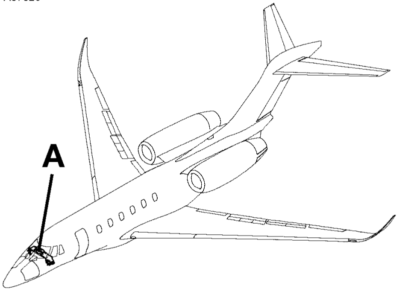

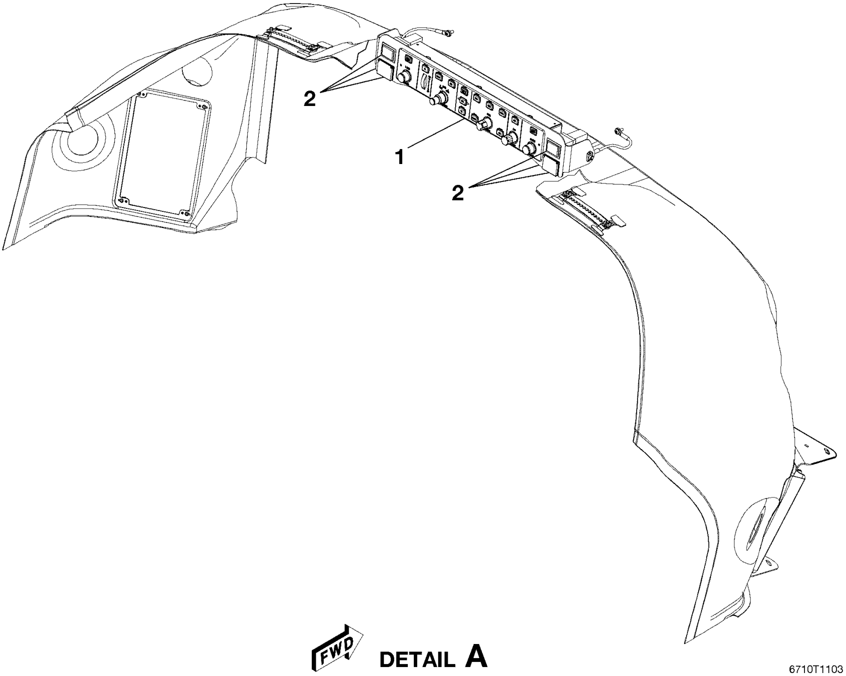

GMC-7200 AFCS MODE CONTROLLER
FIGURE 01 (SHEET 1)

FIG ITEM	PART NUMBER	NOMENCLATURE 1 2 3 4 5 6 7	UNITS PER ASSY
01			
-		GMC-7200 AFCS MODE CONTROLLER	RF
1	011-02584-00	. GMC7200 AP MODE CONTROL UI303 . . . . V0TRC3	01
2		. ENGINE FIRE SWITCHES REFER TO 26-20-05 FIGURE 01	RF

- ITEM NOT ILLUSTRATED

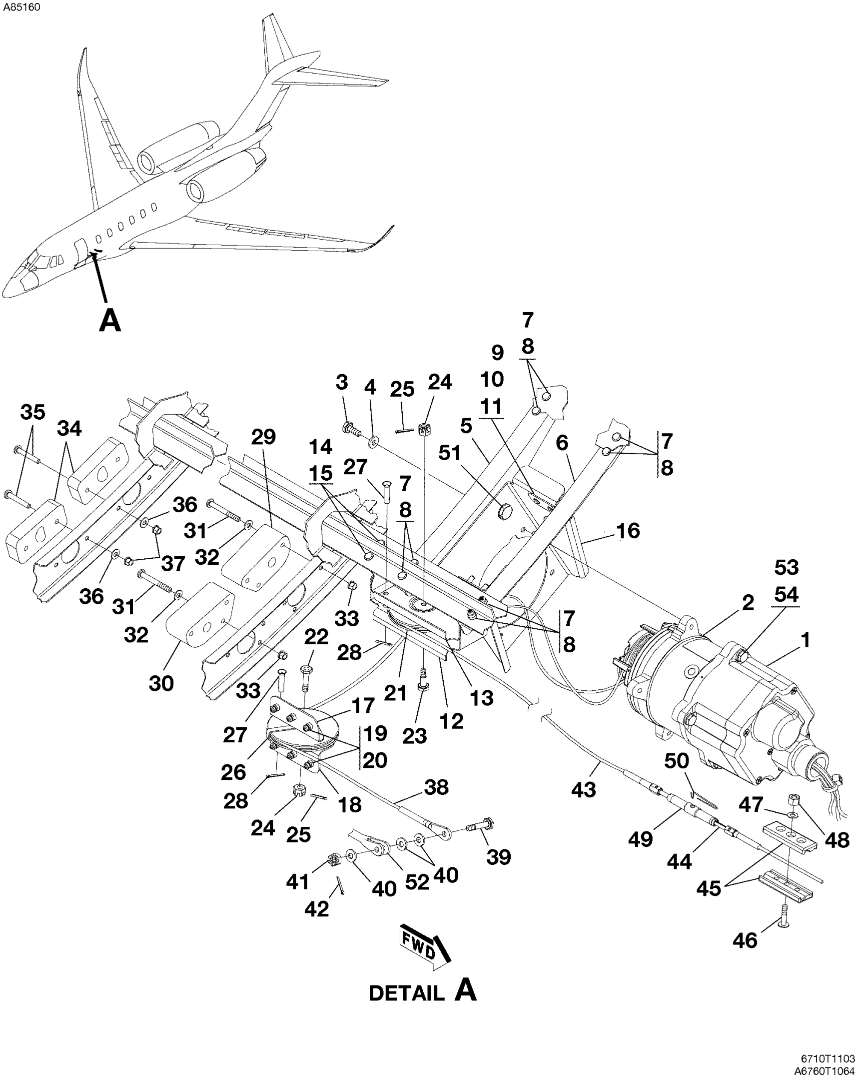

AUTOPILOT SERVO - AILERON ROLL
FIGURE 01 (SHEET 1)

FIG ITEM	PART NUMBER	NOMENCLATURE 1 2 3 4 5 6 7		UNITS PER ASSY
01				
-		AUTOPILOT SERVO - AILERON ROLL		RF
1	011-02213-10	. GSA-9000 SERVO ACTUATOR	V0TRC3	01
2	011-02214-10	. GSM 9100 SERVO GEARBOX	V0TRC3	01
3	AN3-4A	. BOLT		04
4	NAS1149F0363P	. WASHER		04
5	6760589-8	. BRACKET CLIP		01
6	6760589-7	. BRACKET CLIP		01
		ATTACHING PARTS		
7	HL12VBJ5-4	. PIN	V73197	04
8	HL86DU-5	. COLLAR	V73197	04
		—*—		
9	6760589-2	. CLIP		02
		ATTACHING PARTS		
10	HL10VBJ5-2	. PIN	V73197	04
11	HL70-5	. COLLAR	V73197	04
		—*—		
12	6760589-5	. BRACKET HALF-OUTBD LWR		01
13	6760589-6	. BRACKET HALF-OUTBD UPR		01
		ATTACHING PARTS		
14	HL12VBJ5-3	. PIN	V73197	02
15	HL86DU-5	. COLLAR	V73197	02
		—*—		
16	6760589-10	. SERVO MOUNT		01
17	6760589-4	. BRACKET HALF-INBD UPR		01
18	6760589-3	. BRACKET HALF-INBD LWR		01
		ATTACHING PARTS		
19	HL10VBJ4-3	. PIN	V73197	03
20	HL97DU-4	. COLLAR	V73197	03
		—*—		
21	S378-2	. PULLEY		02
		ATTACHING PARTS		
22	NAS6203-8D	. BOLT-OUTBD PULLEY		01
23	NAS6203-6D	. BOLT-INBD PULLEY		01
24	MS17825-3	. NUT		01
25	MS24665-132	. COTTER PIN		01
		—*—		
26	6760589-9	. CABLE GUARD		01
27	S3940-4	. PIN		02
28	MS24665-132	. COTTER PIN		02
29	6760581-23	. FAIRLEAD		01
30	6760581-24	. FAIRLEAD		01
		ATTACHING PARTS		
31	MS27039-0822	. SCREW		03
32	NAS1149FN832P	. WASHER		03
33	MS21042-08	. NUT		03
		—*—		
34	6760581-22	. FAIRLEAD		02
		ATTACHING PARTS		
35	MS27039-0816	. SCREW		02
36	NAS1149FN832P	. WASHER		02
37	MS21042-08	. NUT		02
		—*—		
38	6760020-8	. CABLE-AILERON RH		01
		ATTACHING PARTS		
39	NAS6203-11D	. BOLT		01
40	NAS1149F0363P	. WASHER		03
41	MS17825-3	. NUT		03
42	MS24665-132	. COTTER PIN		01
		—*—		
43	6760020-26	. CABLE-AILERON LH		01
44	6760020-9	. CABLE-AILERON		01
45	6760581-11	. CLAMP BLOCK HALF		02
		ATTACHING PARTS		
46	AN525-832R12	. SCREW		03
47	NAS1149FN816P	. WASHER		03
48	MS21044N08	. NUT		03
		—*—		
49	MS21251-B3S	. TURNBUCKLE BODY-LOCKING		01
50	MS21256-1	. CLIP		02
51	S3521-6	. GROUND STUD KIT CGS12		01
52		. AILERON CONTROL CABLES REFER TO 27-10-15 FIGURE 01		RF
53	AN3-5A	. BOLT		04
54	NAS1149F0363P	. WASHER		04
- 55	011-02311-00	. GSM-9100 INSTALLATION KIT	V0TRC3	01

- ITEM NOT ILLUSTRATED

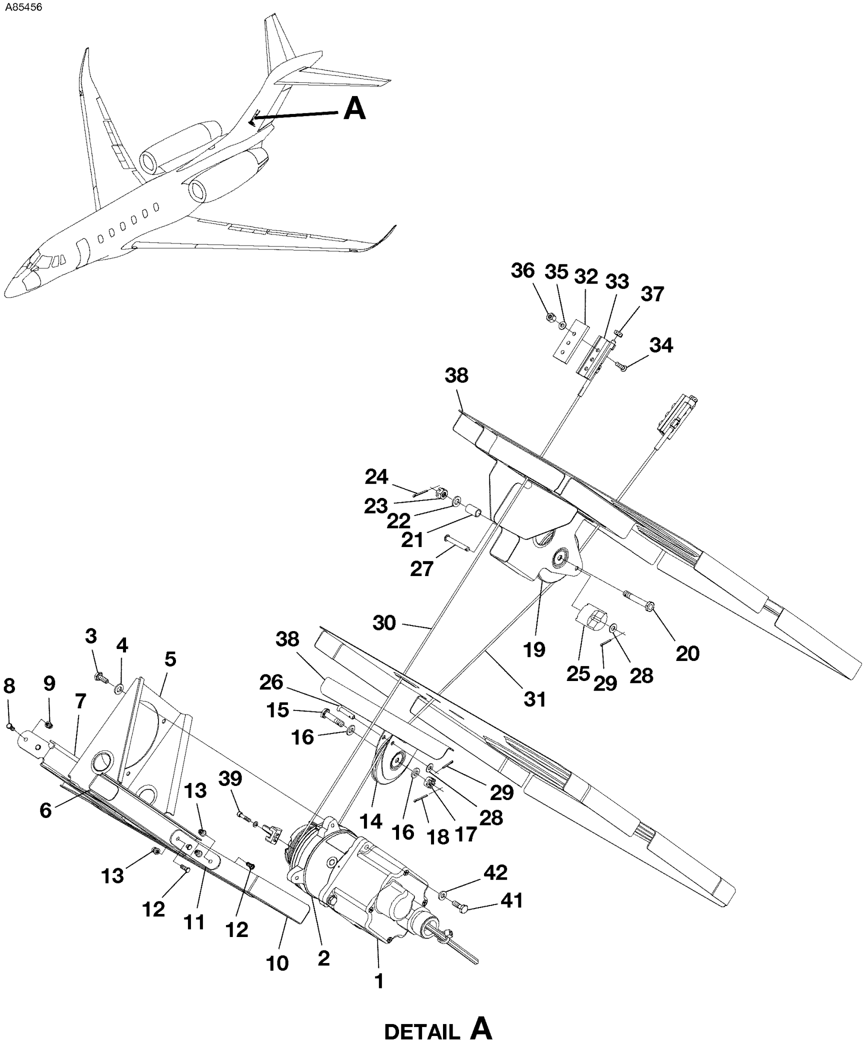

AUTOPILOT SERVO - ELEVATOR PITCH
FIGURE 02 (SHEET 1)

FIG ITEM	PART NUMBER	NOMENCLATURE 1 2 3 4 5 6 7		UNITS PER ASSY
02				
-		AUTOPILOT SERVO - ELEVATOR PITCH		RF
1	011-02213-10	. SERVO ACTUATOR	V0TRC3	01
2	011-02214-10	. SERVO GEARBOX	V0TRC3	01
		ATTACHING PARTS		
3	AN3-4A	. BOLT		04
4	NAS1149F0463P	. WASHER		04
		—*—		
5	6760595-26	. SERVO MOUNT BRACKET		01
6	6760595-25	. STIFFENER		01
7	6760595-3	. SERVO STIFFENER		01
		ATTACHING PARTS		
8	HL10VBJ5-2	. PIN	V73197	02
9	HL97DU-5	. COLLAR	V73197	02
		—*—		
10	6760595-6	. STIFFENER AFT RIB		01
11	6760595-27	. CLIP		02
		ATTACHING PARTS		
12	HL10VBJ5-2	. PIN-RH ONLY	V73197	04
13	HL97DU-5	. COLLAR-RH ONLY	V73197	04
		—*—		
14	MS20219-4	. PULLEY		01
		ATTACHING PARTS		
15	NAS6604D10	. BOLT		01
16	NAS1149F0463P	. WASHER		02
17	MS17825-4	. NUT		01
18	MS24665-134	. COTTER PIN		01
		—*—		
19	MS20219-4	. PULLEY		01
		ATTACHING PARTS		
20	NAS6604D19	. BOLT		01
21	NAS43DD4-41	. SPACER		01
22	NAS1149F0463P	. WASHER		01
23	MS17825-4	. NUT		01
24	MS24665-134	. COTTER PIN		01
		—*—		
25	6760575-5	. CABLE GUARD		01
26	S3940-5	. PIN-LWR		01
27	MS20392-2C41	. PIN-UPR		01
28	NAS1149F0332P	. WASHER		02
29	MS24665-132	. COTTER PIN		02
30	6760020-24	. SERVO CABLE-UP ELEVATOR AUTOPILOT		01
31	6760020-25	. SERVO CABLE-DWN ELEVATOR AUTOPILOT		01
32	6760575-2	. CLAMP BLOCK HALF		02
33	6760575-3	. CLAMP BLOCK HALF		02
		ATTACHING PARTS		
34	MS24694-S6	. SCREW		03
35	NAS1149FN832P	. WASHER		03
36	MS21044N08	. NUT		03
		—*—		
37	NAS509-3	. NUT		02
38		. BRACKET-VERTICAL STABILIZER REFER TO 55-30-00 FIGURE 04		RF
39	6760595-29	. CABLE GUARD		01
- 40	011-02311-00	. GSM-9100 INSTALLATION KIT	V0TRC3	01
41	AN3-5A	. BOLT		04
42	NAS1149F0363P	. WASHER		04

- ITEM NOT ILLUSTRATED

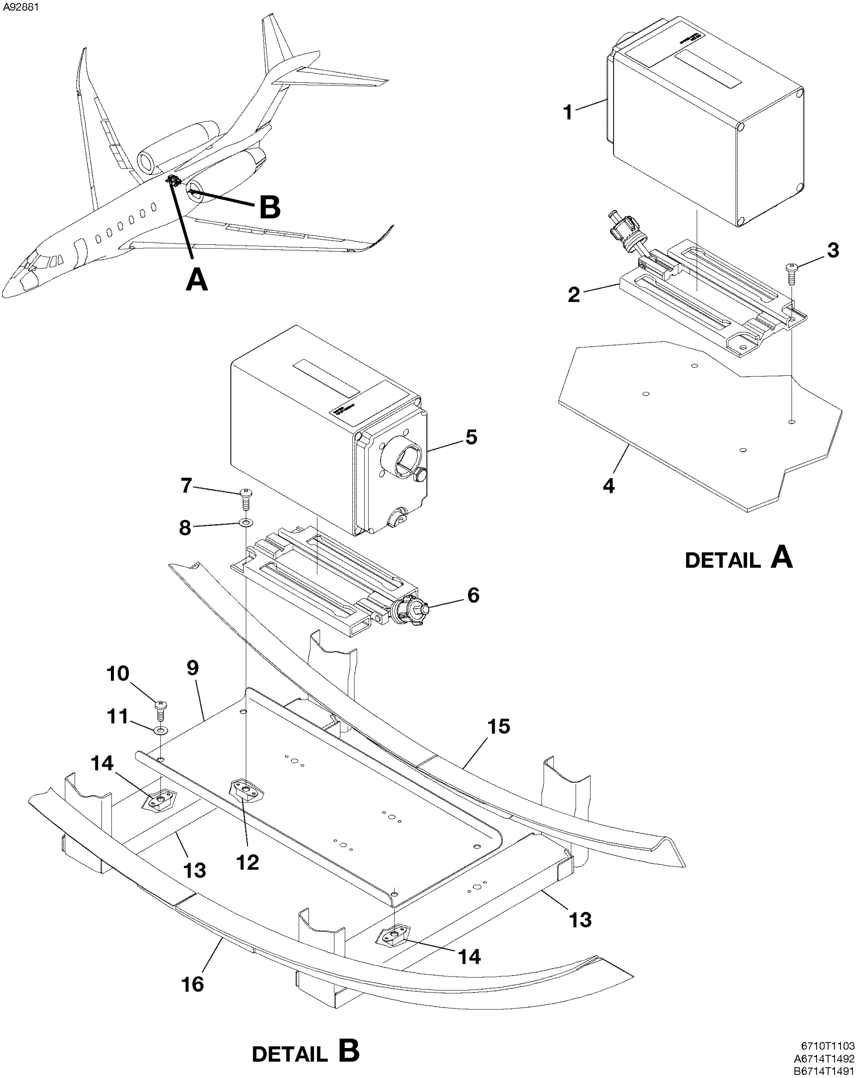

GARMIN GAC 9200 ACTUATOR CONTROLLER
FIGURE 01 (SHEET 1)

FIG ITEM	PART NUMBER	NOMENCLATURE 1 2 3 4 5 6 7		UNITS PER ASSY
01				
-		GARMIN GAC 9200 ACTUATOR CONTROLLER		RF
1	011-02629-00	. GAC-9200 ACTUATOR CONTROL UK307	V0TRC3	01
2	011-02450-00	. GAC INSTALLATION RACK	V0TRC3	01
		ATTACHING PARTS		
3	MS27039-1-09	. SCREW		04
		—*—		
4		. SHELF ASSY REFER TO 23-70-00 FIGURE 01		RF
5	011-02629-00	. GAC-9200 ACTUATOR CONTROL UK306	V0TRC3	01
6	011-02450-00	. GAC INSTALLATION RACK	V0TRC3	01
		ATTACHING PARTS		
7	MS27039-1-09	. SCREW		04
8	NAS1149F0316P	. WASHER		04
		—*—		
9	9509203-5	. MOUNT PLATE ASSY - GAC		01
		ATTACHING PARTS		
10	MS27039-1-08	. SCREW		04
11	NAS1149F0316P	. WASHER		04
		—*—		
12	MS21059L3	. . NUTPLATE		04
13	9509203-4	. SUPPORT ASSY - GAC		02
14	MS21059L3	. . NUTPLATE		02
15		. FWD ENGINE BEAM REFER TO 53-60-01 FIGURE 07		RF
16		. FRAME INSTALLATION FS 511.00 REFER TO 53-60-01 FIGURE 06		RF

- ITEM NOT ILLUSTRATED

CHAPTER

23

COMMUNICATIONS

CHAPTER SECTION SUBJECT		NUMBER OF PAGES	DATE
23 - TITLE			
23 - LIST OF EFFECTIVE PAGES			
23 - RECORD OF TEMPORARY REVISIONS			
23 - TABLE OF CONTENTS			
23-11-00	Figure 01	2	May 1/2014
23-11-10	Figure 01	2	Apr 1/2015
23-11-20	Figure 01	2	May 1/2014
23-13-00	Figure 01	4	May 1/2014
23-15-00	Figure 01	4	Oct 1/2015
23-15-05	Figure 01	2	May 1/2014
23-15-45	Figure 01	2	May 1/2014
23-50-00	Figure 01	2	May 1/2014
23-50-15	Figure 01	2	Jan 1/2015
23-50-20	Figure 01	2	May 1/2014
23-50-25	Figure 01	2	May 1/2014
23-60-00	Figure 01	2	May 1/2014
23-70-00	Figure 01	2	Jul 1/2016

© Cessna Aircraft Company

SUBJECT	CHAPTER SECTION SUBJECT	FIGURE	EFFECTIVITY START	EFFECTIVITY END
VHF COMMUNICATION SYSTEM	23-11-00	01		
VHF COMM 1 AND COMM 2 ANTENNA	23-11-10	01		
VHF COMM 3 ANTENNA	23-11-20	01		
HF COMMUNICATION SYSTEM	23-13-00	01		
SATELLITE COMMUNICATION SYSTEM	23-15-00	01		
GSR 56 TRANSCEIVER INSTALLATION	23-15-05	01		
AIRCELL AXXESS IRIDIUM ANTENNA	23-15-45	01		
DIGITAL AUDIO SYSTEM	23-50-00	01		
MAINTENANCE JACKS	23-50-15	01		
AUDIO INTEGRATING SYSTEM	23-50-20	01		
FLIGHT COMPARTMENT SPEAKER	23-50-25	01		
STATIC DISCHARGING	23-60-00	01		
COCKPIT VOICE RECORDER	23-70-00	01		

© Cessna Aircraft Company

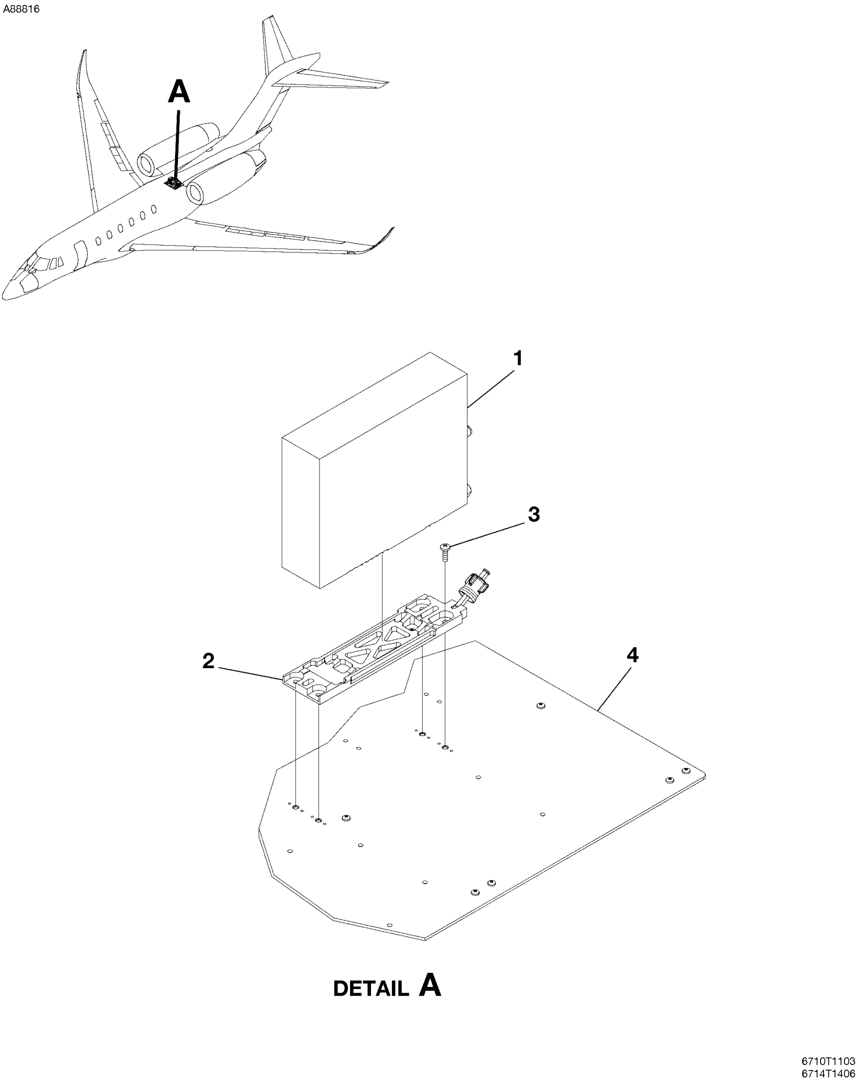

VHF COMMUNICATION SYSTEM
FIGURE 01 (SHEET 1)

FIG ITEM	PART NUMBER	NOMENCLATURE 1 2 3 4 5 6 7		UNITS PER ASSY
01				
-		VHF COMMUNICATION SYSTEM		RF
1	011-02303-00	. GDR 66-VHF DATA LINK UK501	V0TRC3	01
2	011-02477-00	. GDR-66 MOUNT	V0TRC3	01
		ATTACHING PARTS		
3	MS27039-1-09	. SCREW		04
		—*—		
4		. SHELF ASSY REFER TO 23-70-00 FIGURE 01		RF

- ITEM NOT ILLUSTRATED

A89960

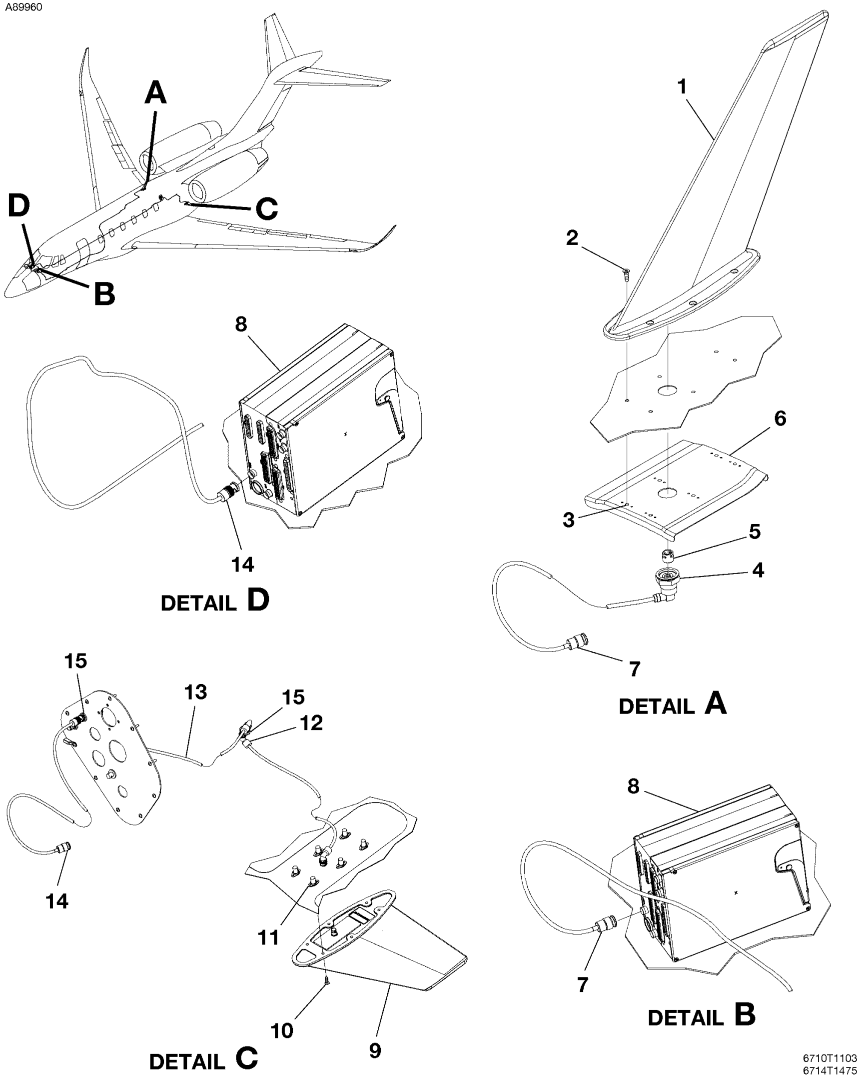

VHF COMM 1 AND COMM 2 ANTENNA
FIGURE 01 (SHEET 1)

FIG ITEM	PART NUMBER	NOMENCLATURE 1 2 3 4 5 6 7	UNITS PER ASSY
01			
-		VHF COMM 1 AND COMM 2 ANTENNA	RF
1	S65-8280-18	. VHF ANTENNA-UPR COMM 1 YF500 . . . . V13691	01
		ATTACHING PARTS	
2	MS24694-S51	. SCREW	06
3	S2031-3	. NUTPLATE	06
		—*—	
4	BMT101-01	. ANTENNA ADAPTER-TNC/BNC JF500 . . . . V66197	01
5	AS101-02	. ALIGNMENT SLEEVE V66197	01
6	9509101-6	. DOUBLER	01
7	500-28986-01	. COAX ASSY - COMM 1 . . . . V66197	01
8		. INTEGRATED AVIONICS UNIT REFER TO 31-40-15 FIGURE 01	RF
9	S65-8280-18	. VHF ANTENNA-LWR COMM 2 YY500 . . . . V13691	01
		ATTACHING PARTS	
10	MS24694-C51	. SCREW	06
11	NAS1473A3	. NUTPLATE	06
		—*—	
12	500-28986-02	. COAX ASSY - COMM 2 . . . . V66197	01
13	500-28986-03	. COAX ASSY - COMM 2 . . . . V66197	01
14	500-28986-04	. COAX ASSY - COMM 2 . . . . V66197	01
15		. ADAPTER-REFER TO 53-23-00 FIGURE 03A	RF R

- ITEM NOT ILLUSTRATED

A89961

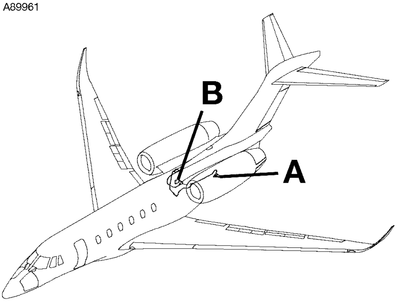

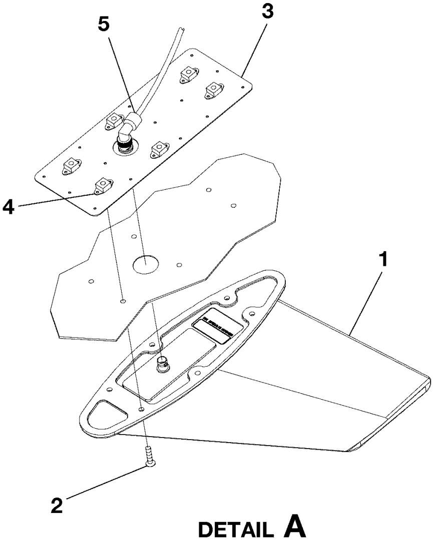

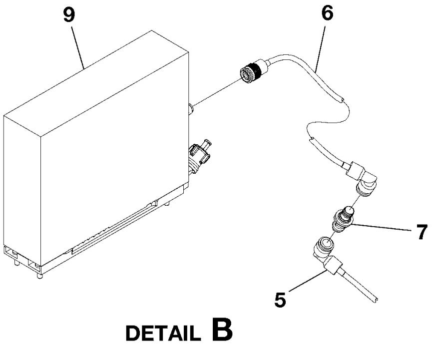

6710T1103
6718T1479

VHF COMM 3 ANTENNA
FIGURE 01 (SHEET 1)

FIG ITEM	PART NUMBER	NOMENCLATURE 1 2 3 4 5 6 7		UNITS PER ASSY
01				
-		VHF COMM 3 ANTENNA		RF
1	S65-8280-18	. VHF ANTENNA YY501	V13691	01
		ATTACHING PARTS		
2	MS24693-C275	. SCREW		06
		—*—		
3	9523030-3	. PLATE ASSY		01
4	MS21059L3	. . NUTPLATE		06
5	500-29007-01	. COAX ASSY - VHF DATALINK	V66197	01
6	500-29007-02	. COAX ASSY - VHF DATALINK	V66197	01
7	5-70-30	. ADAPTER JY404	V05209	01
- 8	KA91-02	. TNC CONNECTOR ALT FOR 5-70-30	V91836	01
9		. VHF DATALINK REFER TO 23-11-00 FIGURE 01		RF

- ITEM NOT ILLUSTRATED

A88601

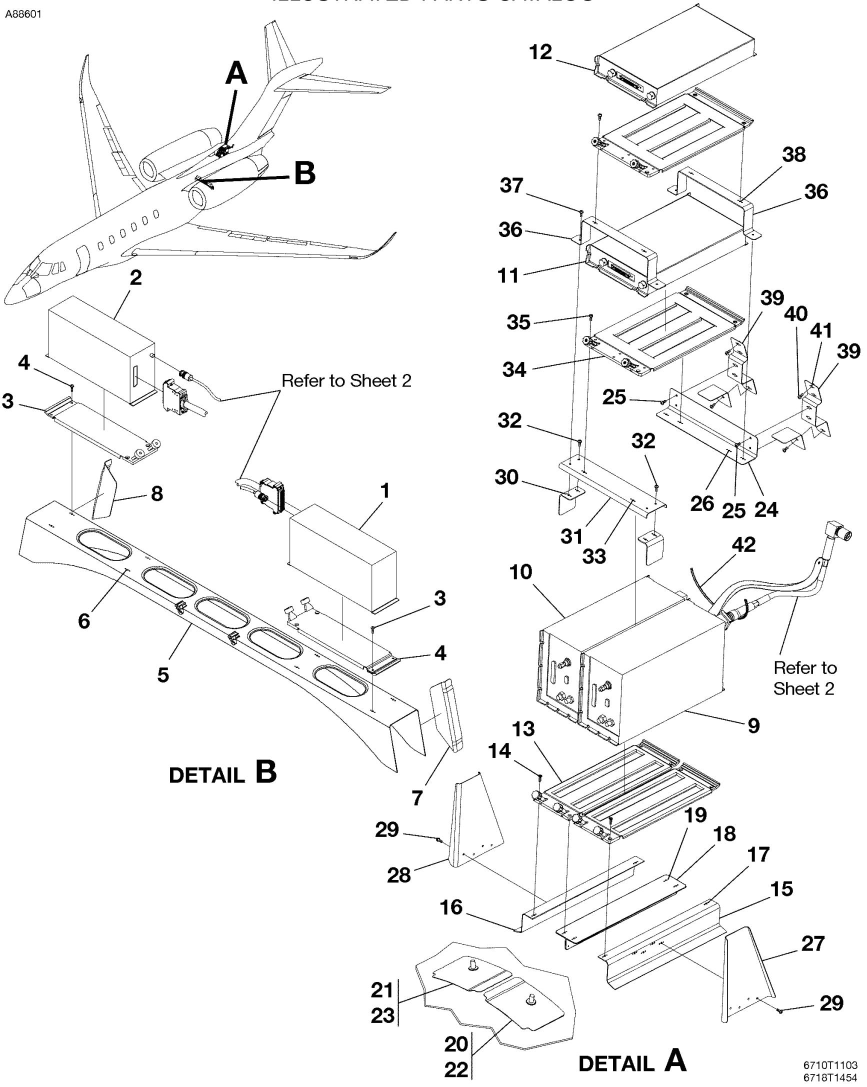

HF COMMUNICATION SYSTEM
FIGURE 01 (SHEET 1)

FIG ITEM	PART NUMBER	NOMENCLATURE 1 2 3 4 5 6 7		UNITS PER ASSY
01				
-		HF COMMUNICATION SYSTEM		RF
1	S3100-449	. KRX-1053 RECEIVER/EXCITER-HF1 VENDOR NO. 064-01073-0102(SW MOD 02/01 ONLY)		01
2	S3100-449	. KRX-1053 RECEIVER/EXCITER-HF2 VENDOR NO. 064-01073-0102(SW MOD 02/01 ONLY)		01
3	050-03628-0001	. KRX-1053 TRAY ASSY	V55939	02
		ATTACHING PARTS		
4	MS27039-0808	. SCREW		04
		—*—		
5	9510004-8	. SHELF ASSY		01
6	MS21075L08N	. . NUTPLATE		08
7	9510004-5	. LH BRACKET		01
8	9510004-6	. RH BRACKET		01
9	S3100-447	. KAC-1052 ANTENNA COUPLER-VENDOR NO. 064-01074-0101(MOD 3, SW 01/05 ONLY) UV505		01
10	S3100-447	. KAC-1052 ANTENNA COUPLER-VENDOR NO. 064-01074-0101(MOD 3, SW 01/05 ONLY) UV506		01
11	064-01072-0101	. KPA-1052 POWER AMP UV503	V55939	01
12	064-01072-0101	. KPA-1052 POWER AMP UV504	V55939	01
13	050-03658-0001	. KAC-1052 TRAY ASSY	V55939	02
		ATTACHING PARTS		
14	MS24694-S6	. SCREW		04
		—*—		
15	9510005-5	. LH ZEE ASSY		01
16	9510005-6	. RH ZEE ASSY		01
17	MS21069L08	. . NUTPLATE		06
18	9509407-3	. TEE ASSY		01
19	MS21069L08	. . NUTPLATE		04
20	9509407-9	. FILLER-LH		01
21	9509407-10	. FILLER-RH		01
22	9509407-7	. DOUBLER-LH		01
23	9509407-8	. DOUBLER-RH		01
24	9510005-27	. AFT SUPPORT ASSY		01
		ATTACHING PARTS		
25	MS35206-249	. SCREW		04
		—*—		
26	MS21069L08	. . NUTPLATE		04
27	9510005-13	. LH UPRIGHT ASSY		01
28	9510005-14	. RH UPRIGHT ASSY		01
		ATTACHING PARTS		
29	MS35206-244	. SCREW		04
		—*—		
30	MS21069L08	. . NUTPLATE		02
31	9510005-19	. CHANNEL ASSY		01
		ATTACHING PARTS		
32	MS35206-244	. SCREW		02
		—*—		
33	MS21069L08	. . NUTPLATE		02
34	050-03629-0001	. KPA-1052 TRAY ASSY	V55939	02
		ATTACHING PARTS		
35	MS35206-244	. SCREW		04
		—*—		
36	9510005-21	. STANDOFF ASSY		02
		ATTACHING PARTS		
37	MS35206-244	. SCREW		02
		—*—		
38	MS21069L08	. . NUTPLATE		02
39	9510005-24	. FOOT ASSY		02
		ATTACHING PARTS		
40	MS35206-243	. SCREW		04
		—*—		
41	MS21069L08	. . NUTPLATE		02
42	S1050-1	. GROMMET-BKI		AR

- ITEM NOT ILLUSTRATED

A88602

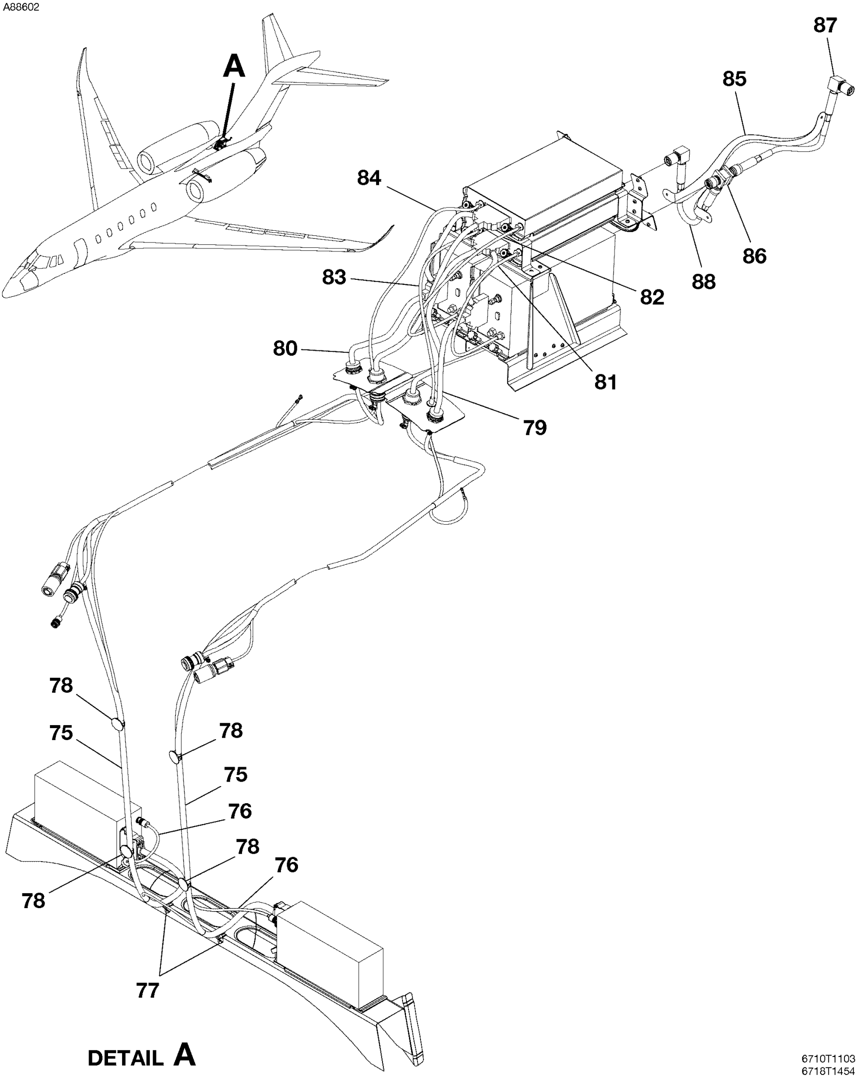

HF COMMUNICATION SYSTEM
FIGURE 01 (SHEET 2)

FIG ITEM	PART NUMBER	NOMENCLATURE 1 2 3 4 5 6 7		UNITS PER ASSY
01				
75	9569303-1	. HARNESS ASSY-TAILCONE HF RECEIVER/EXCITER		01
76	500-28992-02	. COAX ASSY-HF 1 AND HF 2	V66197	02
77	S2034-1	. MOUNT		02
78	CB4019G5N	. MOUNT	V66530	02
79	9569421-1	. HARNESS ASSY-HF1 PA		01
80	9569422-1	. HARNESS ASSY-HF2 PA		01
81	500-28992-03	. COAX ASSY-HF1 AMP-COUPLER	V66197	01
82	500-28992-13	. COAX ASSY-HF2 AMP-COUPLER	V66197	01
83	500-28992-01	. COAX ASSY-HF1 AMP-DISCONNECT	V66197	01
84	500-28992-11	. COAX ASSY-HF2 AMP-DISCONNECT	V66197	01
85	9510001-15	. GROUND STRAP		02
86	THA101	. TEE-HN CONNECTOR	V66197	01
87	500-95038-01	. COAX CABLE-KHF 1050 #1	V66197	01
88	500-95038-02	. COAX CABLE-KHF 1050 #2	V66197	01

- ITEM NOT ILLUSTRATED

A88888

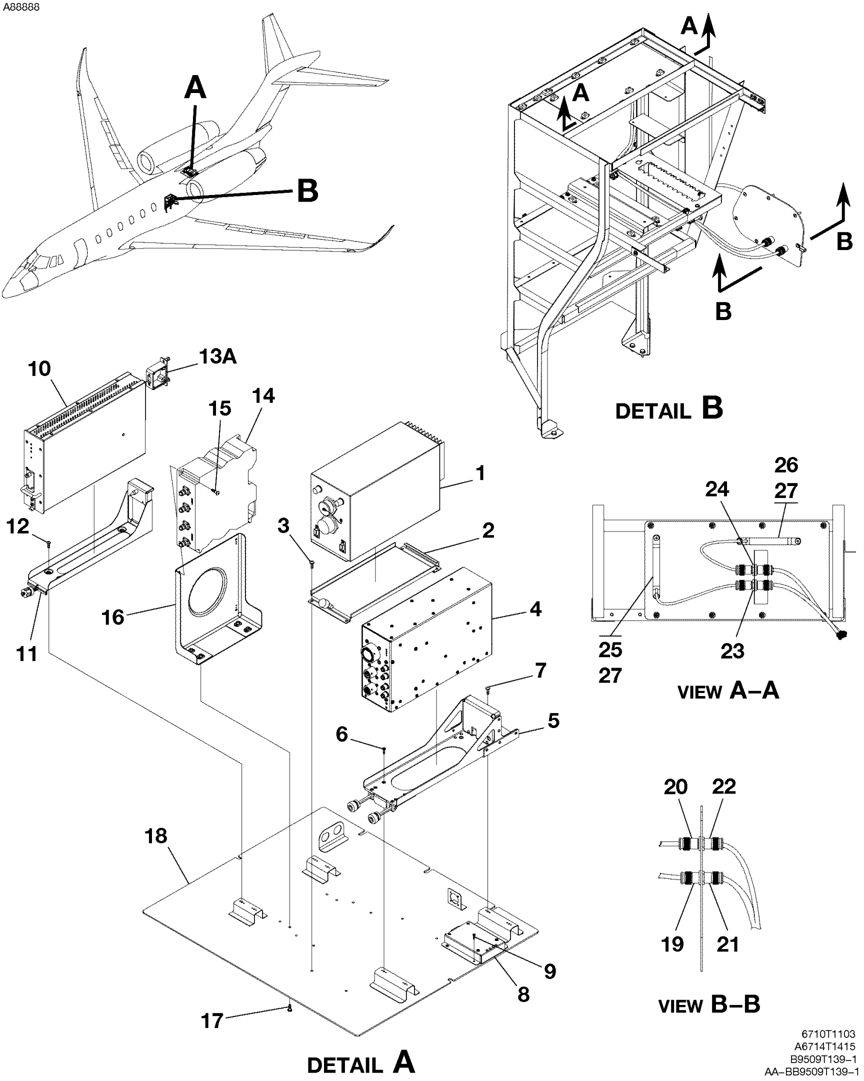

SATELLITE COMMUNICATION SYSTEM
FIGURE 01 (SHEET 1)

FIG ITEM	PART NUMBER	NOMENCLATURE 1 2 3 4 5 6 7				UNITS PER ASSY	
01							
-		SATELLITE COMMUNICATION SYSTEM				RF	
1	P12023	. SATELLITE TRANSCEIVER (AXXESS) UK557	V1NQ67			01	
2	P12107	. MOUNTING TRAY (AXXESS)	V1NQ67			01	
		ATTACHING PARTS					
3	MS27039-1-09	. SCREW				04	
		—*—					
4	P13989	. ATG 4000 BROADBAND LRU UK502	V1NQ67			01	
5	P14291-002	. MOUNTING TRAY	V1NQ67			01	
		ATTACHING PARTS					
6	MS24694-S5	. SCREW				02	
7	MS27039-0809	. SCREW				02	
		—*—					
8	P14126	. AIRCELL CONFIGURATION MODULE UK506	V1NQ67			01	
		ATTACHING PARTS					
9	MS35206-216	. SCREW				04	
		—*—					
10	405040A	. THRANE & THRANE SWIFT BROADBAND UNIT UK503	V0U8J3			01	
11	200-92045-102	. TRAY	V66197			01	
		ATTACHING PARTS					
12	MS27039-0808	. SCREW				04	
		—*—					
- 13	P13242-006	. SWIFT BROADBAND UNIT CONFIGURATION MODULE	V1NQ67	0501	0512	01	
13A	P13242-007	. SWIFT BROADBAND UNIT CONFIGURATION MODULE	V1NQ67	0513	& ON	01	
14	P13167	. INMARSAT FILTER UK564	V1NQ67			01	
		ATTACHING PARTS					
15	MS27039-1-10	. SCREW				04	
		—*—					
16	8909317-3	. BRACKET ASSY				01	
17	MS27039-1-08	. SCREW				04	
18		. SHELF ASSY REFER TO 34-40-00 FIGURE 01				RF	
19	500-28999-14	. COAX ASSY-LH FWD SWIFT BROADBAND	V66197	0513	& ON	01	
20	500-28999-15	. COAX ASSY-LH FWD SWIFT BROADBAND	V66197	0513	& ON	01	
21	500-28999-12	. COAX ASSY-LH AFT SWIFT BROADBAND	V66197	0513	& ON	01	
22	500-28999-13	. COAX ASSY-LH AFT SWIFT BROADBAND	V66197	0513	& ON	01	
23	5-70-30	. ADAPTER-JC581	V05209	0513	& ON	01	
24	5-70-30	. ADAPTER-JC583	V05209	0513	& ON	01	
25	405040A-004	. ANTENNA-SWIFT BROADBAND YC581	V1NQ67	0513	& ON	01	R
- 25A	901167-2	. ANTENNA ASSY-SWIFT BROADBAND ALT FOR 405040A-004 YC581		0513	& ON	02	R
26	405040A-004	. ANTENNA-SWIFT BROADBAND YC583		0513	& ON	01	R
- 26A	901167-2	. ANTENNA ASSY-SWIFT BROADBAND ALT FOR 405040A-004 YC583		0513	& ON	01	R
		ATTACHING PARTS					
27	MS24693-C51	. SCREW				02	R
		—*—					

- ITEM NOT ILLUSTRATED

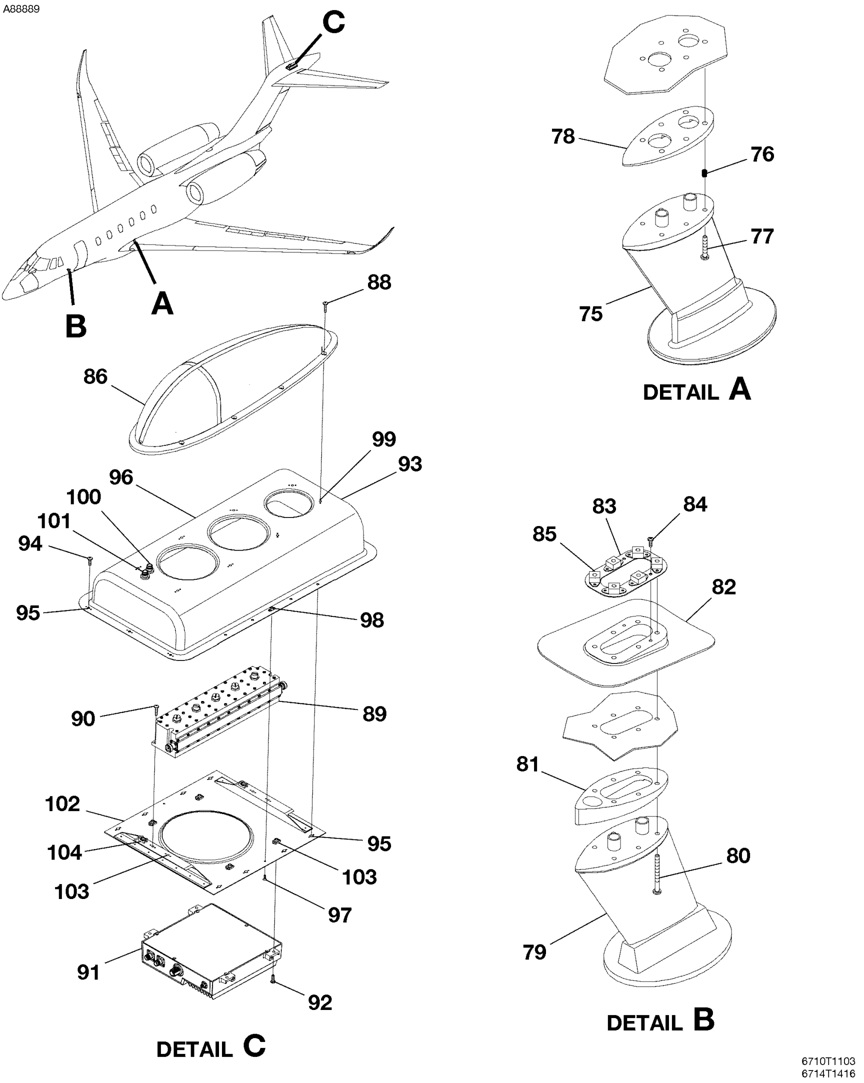

SATELLITE COMMUNICATION SYSTEM
FIGURE 01 (SHEET 2)

FIG ITEM	PART NUMBER	NOMENCLATURE 1 2 3 4 5 6 7	UNITS PER ASSY
01			
75	P12949	. ANTENNA-AIRCELL AIR-TO-GROUND AFT V1NQ67	01
		ATTACHING PARTS	
76	MS21209C0820	. INSERT	06
77	MS27039-0815	. SCREW	06
		—*—	
78	9501025-7	. SPACER	01
79	P12949	. ANTENNA-AIRCELL AIR-TO-GROUND FWD YY502 . . . . . V1NQ67	01
		ATTACHING PARTS	
80	MS27039C0827	. SCREW	06
		—*—	
81	9509615-5	. SPACER	01
82	9509615-3	. SHIM ASSY	01
83	9501035-3	. . DOUBLER ASSY	01
		ATTACHING PARTS	
84	MS35206-214	. . SCREW	02
		—*—	
85	MS21060L08	. . . NUTPLATE	06
86	405006A-PMA	. INMARSAT SATCOM IGA YV501 . . . . . V0U8J3	01
- 87	677-A0002	. SATCOM ANTENNA YV501 ALAT FOR 405006A-PMA V63563	01
		ATTACHING PARTS	
88	MS27039-1-12	. SCREW	08
		—*—	
89	405019A	. IRIDIUM FILTER UV501 . . . . . V0U8J3	01
		ATTACHING PARTS	
90	MS27039-1-12	. SCREW	04
		—*—	
91	405016A	. HI-POWER INMARSAT LOW NOISE AMP (LNA) UV502 . . . . . V0U8J3	01
		ATTACHING PARTS	
92	MS27039-1-09	. SCREW	02
		—*—	
93	9509410-2	. SUPPORT ASSY	01
		ATTACHING PARTS	
94	MS27039-1-09	. SCREW	11
95	MS21069L3	. NUTPLATE	11
		—*—	
96	9509410-4	. . PAN ASSY	01
		ATTACHING PARTS	
97	MS24693-S26	. . SCREW	02
		—*—	
98	MS21069L06	. . . NUTPLATE	02
99	MS21075L3N	. . . NUTPLATE	02
100	8901012-2	. . . TNC FEEDTHRU-BLUE JV500 . . . . . V66197	01
101	8901012-1	. . . TNC FEEDTHRU-RED JV501 . . . . . V66197	01
102	9509410-3	. . TRAY ASSY	01
103	MS21075L3N	. . . NUTPLATE	08
104	S1741-1	. . . ANCHOR	02

- ITEM NOT ILLUSTRATED

A92702

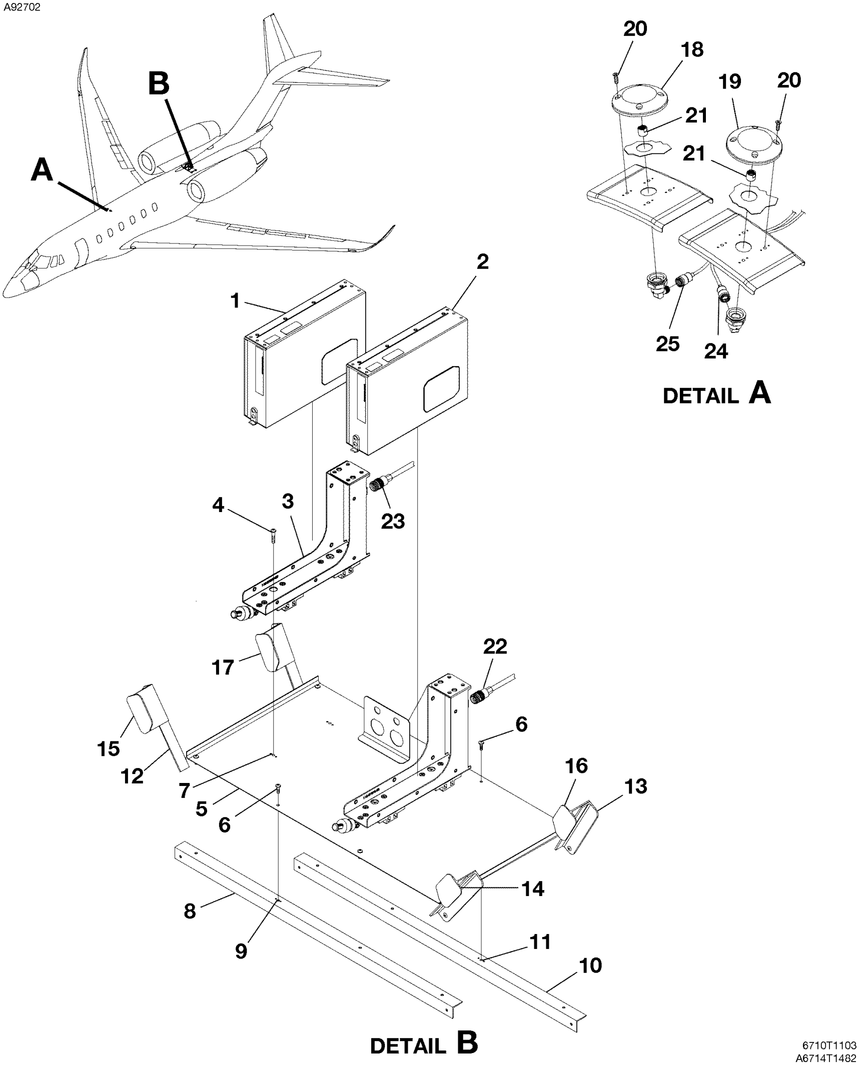

GSR 56 TRANSCEIVER INSTALLATION
FIGURE 01 (SHEET 1)

FIG ITEM	PART NUMBER	NOMENCLATURE 1 2 3 4 5 6 7		UNITS PER ASSY
01				
-		GSR 56 TRANSCEIVER INSTALLATION		RF
1	011-02268-01	. GSR 56 TRANSCEIVER #1 UK521	V0TRC3	01
2	011-02268-01	. GSR 56 TRANSCEIVER #2 UK508	V0TRC3	01
3	115-01018-00	. GSR 56 REMOTE RACK	V0TRC3	02
		ATTACHING PARTS		
4	MS27039-0814	. SCREW		04
		—*—		
5	9509207-21	. SHELF		01
		ATTACHING PARTS		
6	MS27039-0808	. SCREW		10
		—*—		
7	MS21075L08N	. . NUTPLATE		08
8	9509207-27	. ANGLE ASSY-FWD		01
9	MS21069L08	. . NUTPLATE		04
10	9556002-49	. ANGLE ASSY-AFT		01
11	MS21069L08	. . NUTPLATE		06
12	9556002-6	. ANGLE-FWD		02
13	9556002-7	. ANGLE-AFT		02
14	9556002-35	. CLIP-LH FWD		01
15	9556002-36	. CLIP-RH FWD		01
16	9556002-37	. CLIP-LH AFT		01
17	9556002-38	. CLIP-RH AFT		01
18	S67-1575-109	. ANTENNA-IRIDIUM/GPS PASSIVE #1 YF506	V13691	01
19	S67-1575-109	. ANTENNA-IRIDIUM/GPS PASSIVE #2 YC512	V13691	01
		ATTACHING PARTS		
20	MS24694-C52	. SCREW		04
		—*—		
21	AS101-01	. ALIGNMENT SLEEVE	V66197	02
22	9569225-1	. HARNESS ASSY-IRIDIUM TRANSCEIVER #1		01
23	9569226-1	. HARNESS ASSY-IRIDIUM TRANSCEIVER #2		01
24	500-28991-11	. COAX ASSY-IRIDIUM DATALINK #1	V66197	01
25	500-28991-01	. COAX ASSY-IRIDIUM DATALINK #2	V66197	01

- ITEM NOT ILLUSTRATED

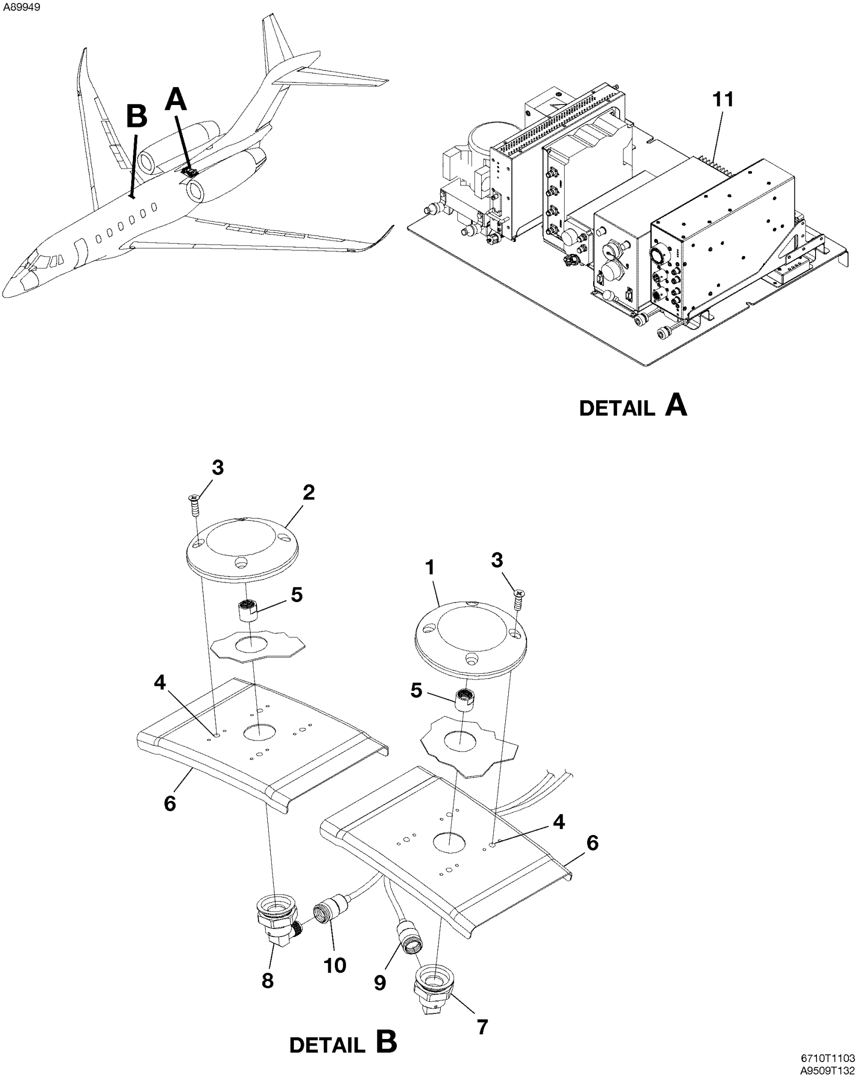

AIRCELL AXXESS IRIDIUM ANTENNA
FIGURE 01 (SHEET 1)

FIG ITEM	PART NUMBER	NOMENCLATURE 1 2 3 4 5 6 7	UNITS PER ASSY
01			
-		AIRCELL AXXESS IRIDIUM ANTENNA	RF
1	S67-1575-109	. IRIDIUM/GPS ANTENNA-PASSIVE LH YC557 . . . . V13691	01
2	S67-1575-109	. IRIDIUM/GPS ANTENNA-PASSIVE RH YF558 . . . . V13691 ATTACHING PARTS	01
3	MS24694-C52	. SCREW	04
4	S2031-3	. NUTPLATE . . . . —*—	04
5	AS101-01	. ALIGNMENT SLEEVE V66197	02
6	8909121-3	. DOUBLER	02
7	BMT101-01	. ANTENNA ADAPTER TNC/BNC JC557 . . . . V66197	01
8	BMT101-01	. ANTENNA ADAPTER TNC/BNC JF558 . . . . V66197	01
9	500-28997-01	. COAX-AXXESS SWIFT BROADBAND CHANNEL 1 . . . . V66197	01
10	500-28997-02	. COAX-AXXESS SWIFT BROADBAND CHANNEL 2 . . . . V66197	01
11		. SATELLITE TRANSCEIVER (AXXESS) REFER TO 23-15-00 FIGURE 01	RF

- ITEM NOT ILLUSTRATED

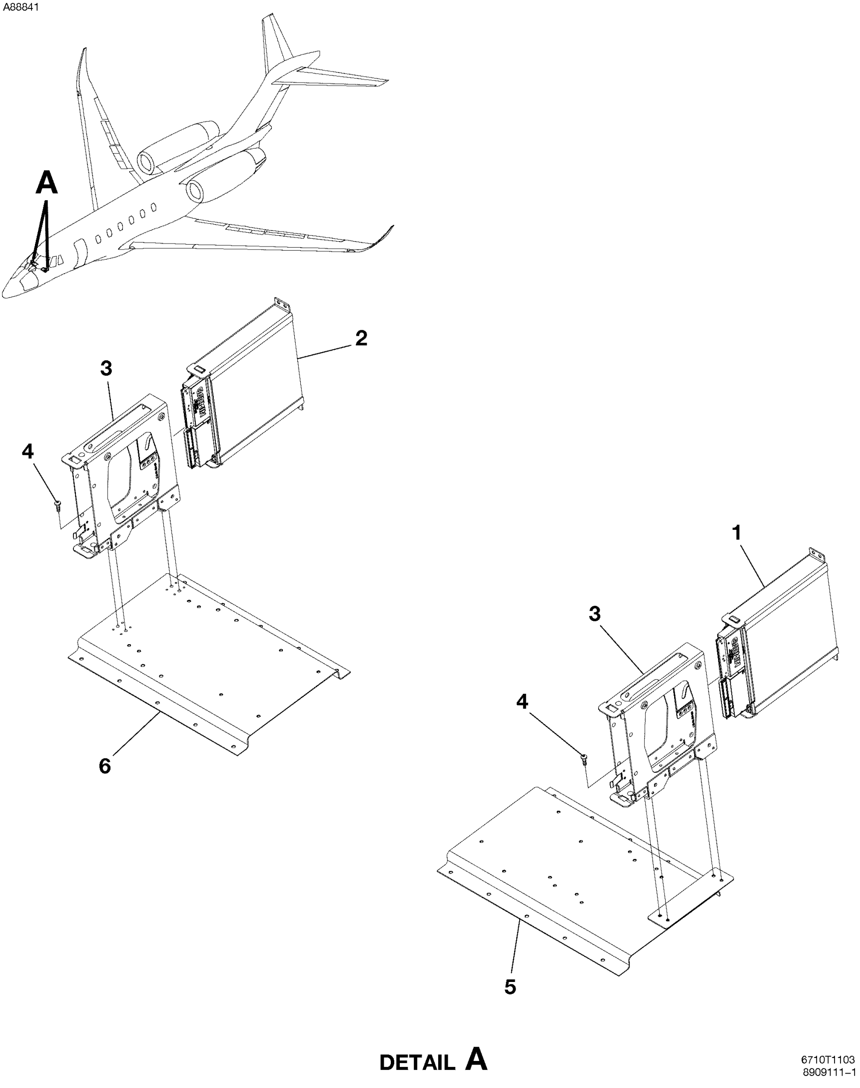

DIGITAL AUDIO SYSTEM
FIGURE 01 (SHEET 1)

FIG ITEM	PART NUMBER	NOMENCLATURE 1 2 3 4 5 6 7	UNITS PER ASSY
01			
-		DIGITAL AUDIO SYSTEM	RF
1	011-01793-00	. GMA 36 REMOTE AUDIO-LH UI505	01
2	011-01793-00	. GMA 36 REMOTE AUDIO-RH UI504	01
3	115-01406-00	. GMA 36 REMOTE RACK	02
		ATTACHING PARTS	
4	MS27039-0808	. SCREW	04
		—*—	
5		. SHELF ASSY-LH REFER TO 31-40-05 FIGURE 01	RF
6	8909111-6	. SHELF ASSY-RH	01

- ITEM NOT ILLUSTRATED

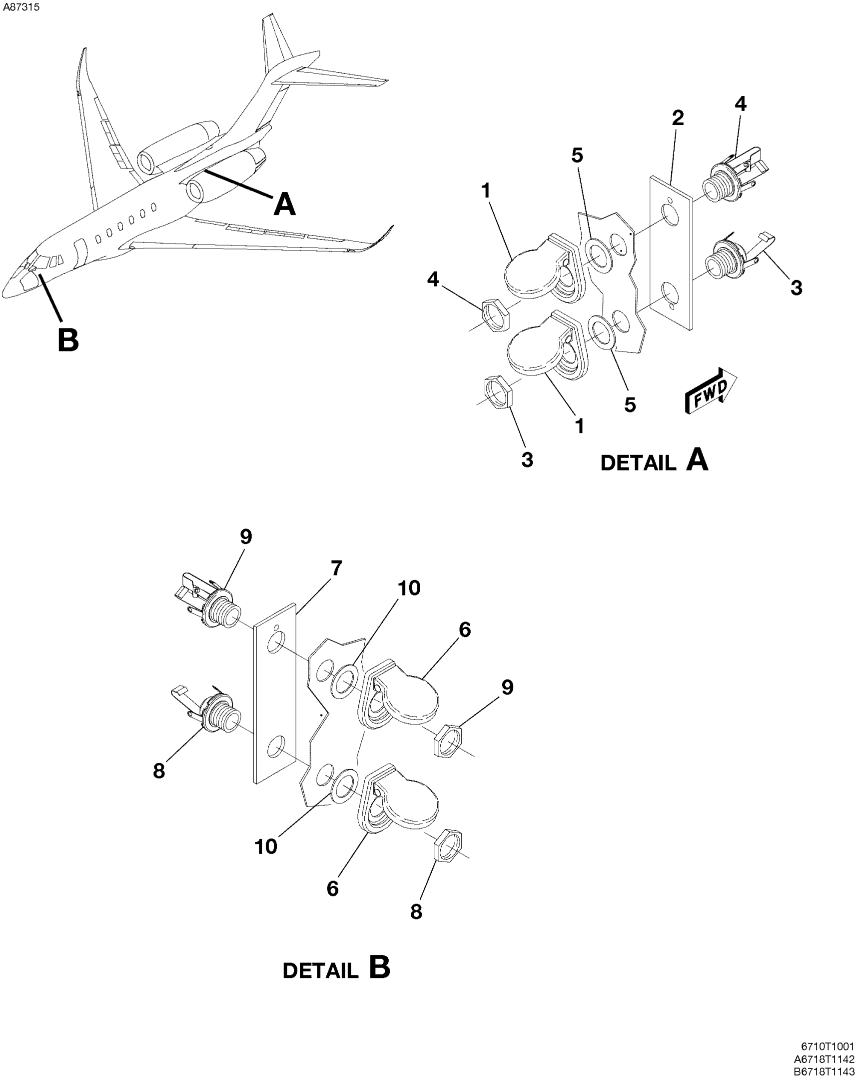

MAINTENANCE JACKS
FIGURE 01 (SHEET 1)

FIG ITEM	PART NUMBER	NOMENCLATURE 1 2 3 4 5 6 7	UNITS PER ASSY
01			
-		MAINTENANCE JACKS	RF
1	515	. COVER-CABIN/GROUND INTERPHONE SYSTEM TAIL V82389	02
- 1A	515X	. COVER-CABIN/GROUND INTERPHONE SYSTEM TAIL ALT FOR 515 . . . . . V82389	02 R
2	9509618-2	. SPACER	02
3	S1103-1	. JACK-PHONE CABIN/GROUND INTERPHONE SYSTEM TAIL JT501	01
4	S1102-1X	. JACK-MIC CABIN/GROUND INTERPHONE SYSTEM TAIL JT502	01
5	S1196-2	. WASHER	02
6	515	. COVER-CABIN/GROUND INTERPHONE SYSTEM NOSE V82389	02
- 6A	515X	. COVER-CABIN/GROUND INTERPHONE SYSTEM TAIL ALT FOR 515 . . . . . V82389	02 R
7	9515002-3	. SPACER	02
8	S1103-1	. JACK-PHONE CABIN/GROUND INTERPHONE SYSTEM NOSE JN502	01
9	S1102-1X	. JACK-MIC CABIN/GROUND INTERPHONE SYSTEM NOSE JN501	01
10	S1196-2	. WASHER	02

- ITEM NOT ILLUSTRATED

A92732

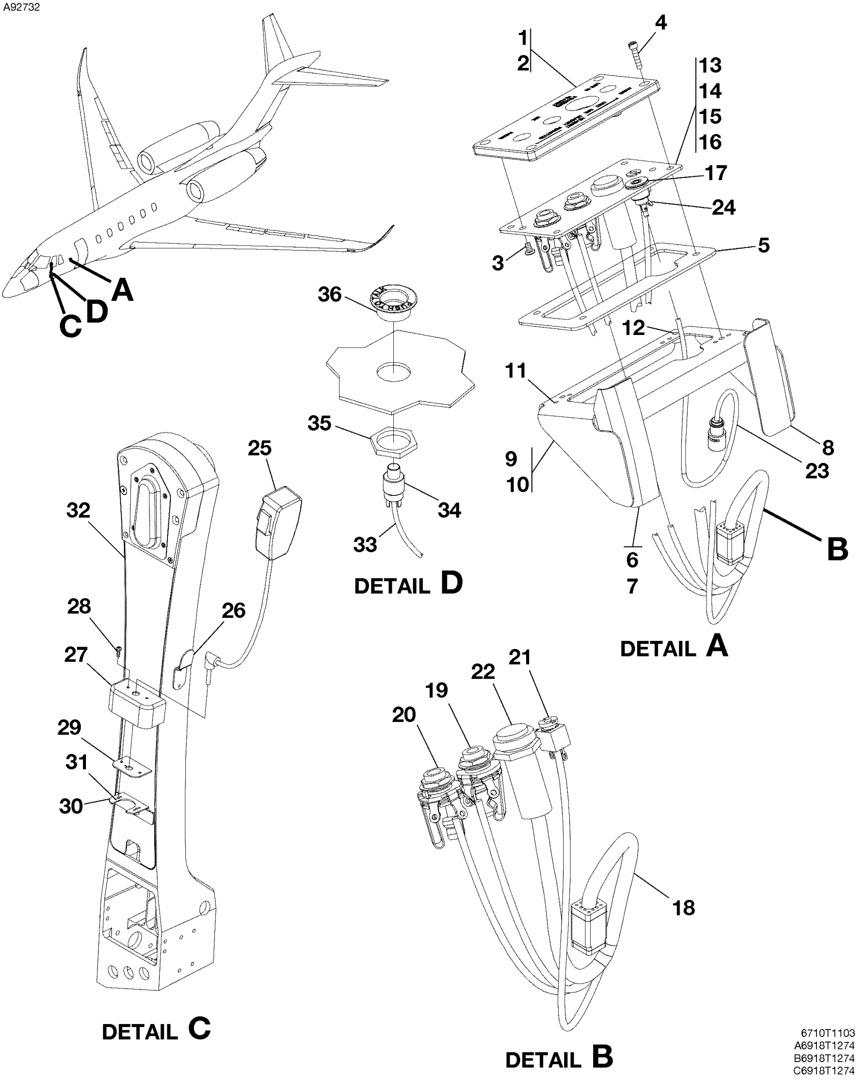

AUDIO INTEGRATING SYSTEM
FIGURE 01 (SHEET 1)

FIG ITEM	PART NUMBER	NOMENCLATURE 1 2 3 4 5 6 7		UNITS PER ASSY
01				
-		AUDIO INTEGRATING SYSTEM		RF
1	9914799-15	. LED PANEL-MIC JACK LH		01
2	9914799-14	. LED PANEL-MIC JACK RH		01
		ATTACHING PARTS		
3	MS35206-212	. SCREW		02
4	NAS1352-04-8	. SCREW		04
		—*—		
5	8909126-16	. INSULATOR		02
6	8915003-3	. ANGLE-FWD LH		01
7	8915003-4	. ANGLE-FWD RH		01
8	8909126-15	. ANGLE-AFT LH AND RH		02
9	8909126-11	. SHELF ASSY-LH		01
10	8909126-12	. SHELF ASSY-RH		01
11	MS21069L04	. . NUTPLATE		03
12	MS21071L04	. . NUTPLATE		01
13	8909126-5	. JACK PANEL ASSY-LH		01
14	8909126-6	. JACK PANEL ASSY-RH		01
15	8909126-20	. . JACK PLATE ASSY-LH		01
16	8909126-21	. . JACK PLATE ASSY-RH		01
17	MS90335-5	. . CONNECTOR		01
18	8969143-1	. . HARNESS ASSY-MIC/PHONE JACK		01
19	S1102-1X	. . . JACK-PHONE JXM513		01
20	S1102-3	. . . JACK-MIC JXM514		01
21	161-3402-E	. . . 3.5MM STEREO JACK-AUDIO LINE IN JXM512	V0ZQ52	01
22	PKG.M0.6SL.LN	. . . CONNECTOR-POWERED HEADSET JXM500	VS3013	01
23	8969150-1	. . HARNESS ASSY-PILOT/COPILOT OXYGEN/MIC PANEL		01
24	MS90335-5	. . . CONNECTOR PXM926		01
25	C596502-0202	. MIC ASSY		02
26	C596501-0103	. MOUNTING KIT		02
27	9509126-4	. SHIELD		02
		ATTACHING PARTS		
28	MS35206-229	. SCREW		02
		—*—		
29	9215016-6	. INSULATOR		02
30	9509126-5	. ANGLE ASSY		02
31	MS21069L06	. . NUTPLATE		02
32		. COLUMN ASSY REFER TO 27-36-00 FIGURE 01		RF
33	8969138-1	. HARNESS ASSY-PUSH TO TALK SWITCH LH AND RH		02
34	MSPF101BC0	. . SWITCH SXM501	V91506	01
35	AN3066-6	. NUT		02
36	8909140-2	. GUARD		02

- ITEM NOT ILLUSTRATED

A89850

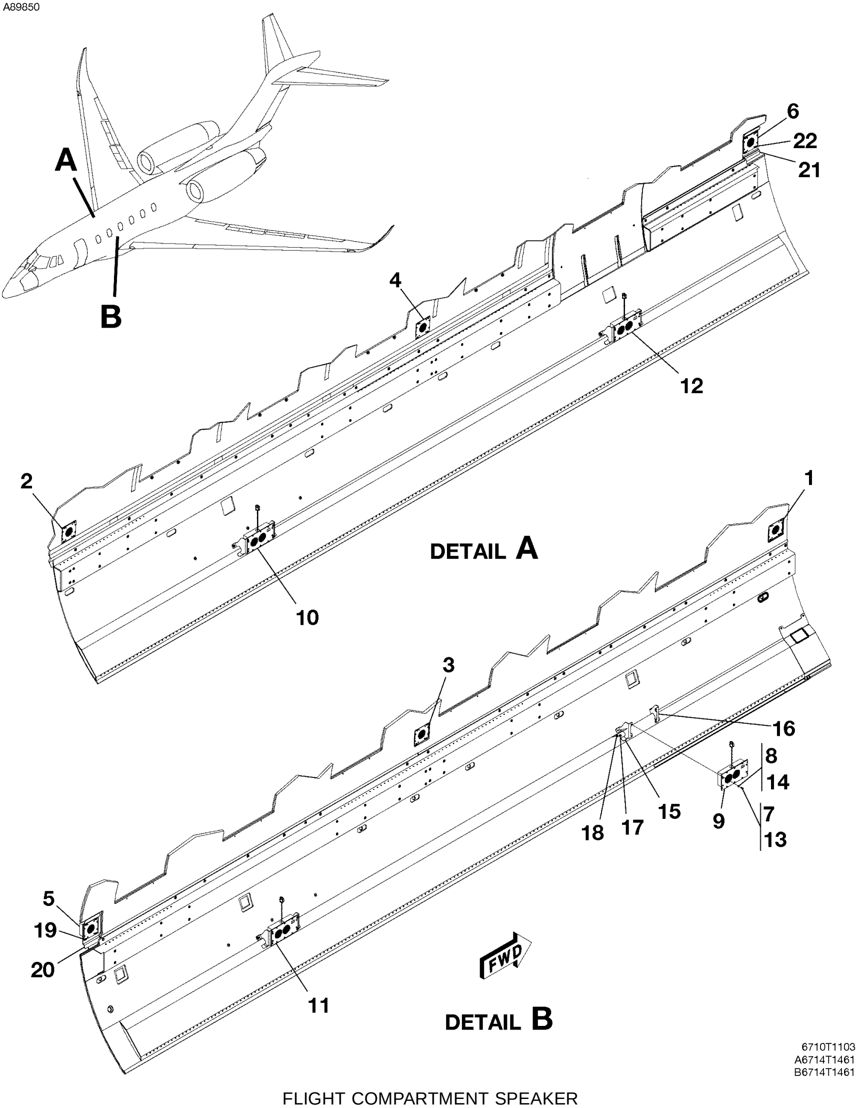

FLIGHT COMPARTMENT SPEAKER
FIGURE 01 (SHEET 1)

FIG ITEM	PART NUMBER	NOMENCLATURE 1 2 3 4 5 6 7	UNITS PER ASSY
01			
-		FLIGHT COMPARTMENT SPEAKER	RF
1	S2800-1138	. CABIN SURROUND SPEAKER UC2004	01
2	S2800-1138	. CABIN SURROUND SPEAKER UF2004	01
3	S2800-1138	. CABIN SURROUND SPEAKER UC2005	01
4	S2800-1138	. CABIN SURROUND SPEAKER UF2005	01
5	S2800-1138	. CABIN SURROUND SPEAKER UC2006	01
6	S2800-1138	. CABIN SURROUND SPEAKER UF2006	01
		ATTACHING PARTS	
7	MS35207-244	. SCREW	04
8	NAS1149FN832P	. WASHER	04
		—*—	
9	S2800-1118	. CABIN LOUDSPEAKER UC2001	01
10	S2800-1118	. CABIN LOUDSPEAKER UF2001	01
11	S2800-1118	. CABIN LOUDSPEAKER UC2002	01
12	S2800-1118	. CABIN LOUDSPEAKER UF2002	01
		ATTACHING PARTS	
13	MS35207-244	. SCREW	04
14	NAS1149FN832P	. WASHER	04
		—*—	
15	6719680-5	. SPEAKER BRACKET ASSY LH	04
16	6719680-6	. SPEAKER BRACKET ASSY RH	04
		ATTACHING PARTS	
17	MS35207-260	. SCREW	01
18	NAS1149F0332P	. WASHER	01
		—*—	
19	MS21075-08	. . NUTPLATE	02
20	6719680-1	. SPEAKER BRACKET ASSY LH	01
21	6719680-2	. SPEAKER BRACKET ASSY RH	01
22	MS21075-08	. . NUTPLATE	02

- ITEM NOT ILLUSTRATED

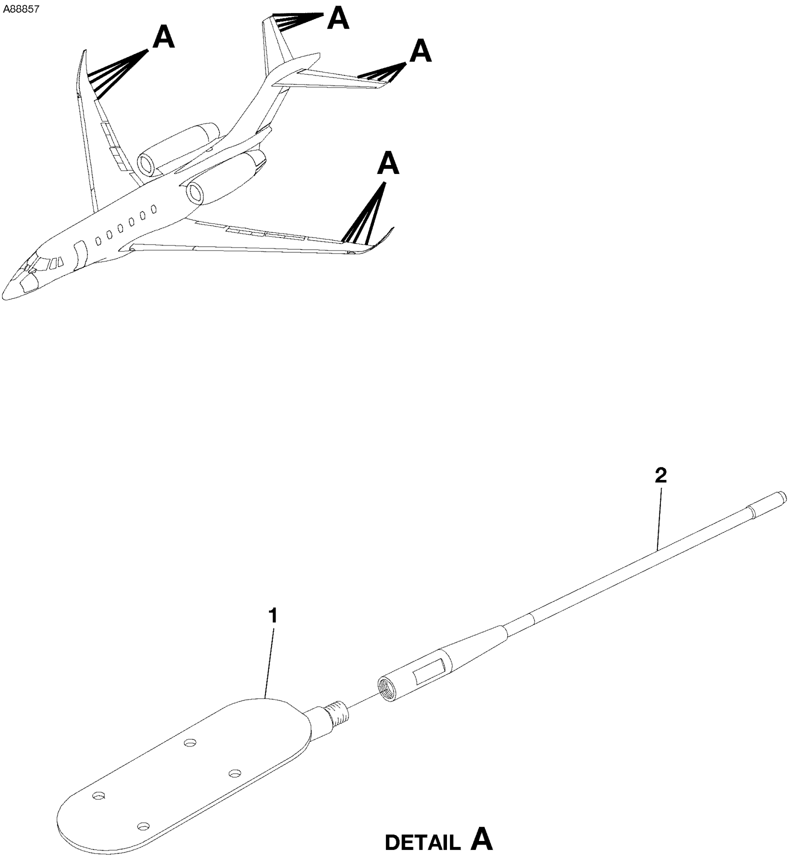

DETAIL A
Typical

6710T1103
A6718T1149

STATIC DISCHARGING
FIGURE 01 (SHEET 1)

FIG ITEM	PART NUMBER	NOMENCLATURE 1 2 3 4 5 6 7	UNITS PER ASSY
01			
-		STATIC DISCHARGING	RF
1	15401	. BASE ASSY V55635	16
2	16920	. STATIC WICK V55635	16

- ITEM NOT ILLUSTRATED

A87390

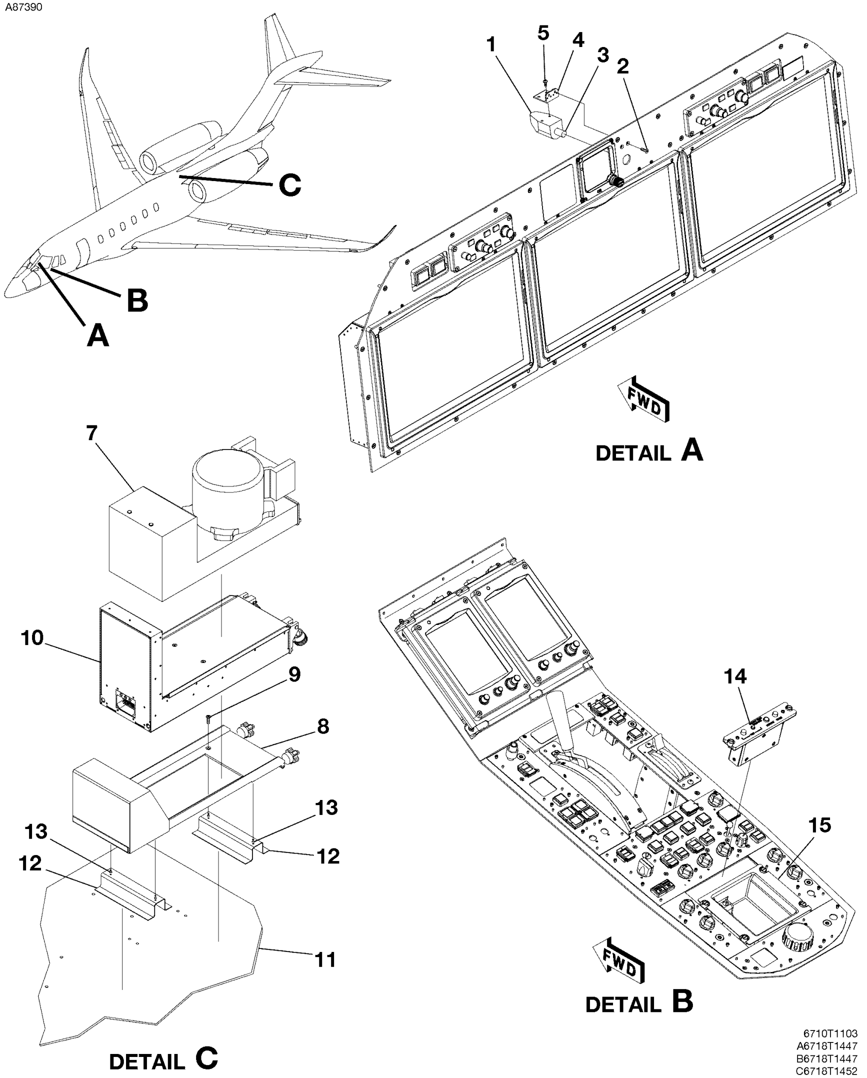

COCKPIT VOICE RECORDER
FIGURE 01 (SHEET 1)

FIG ITEM	PART NUMBER	NOMENCLATURE 1 2 3 4 5 6 7				UNITS PER ASSY	
01							
-		COCKPIT VOICE RECORDER				RF	
1	8909110-4	. MIC ASSY-COCKPIT VOICE RECORDER				01	
		ATTACHING PARTS					
2	MS24693-S28	. SCREW				02	
		—*—					
3	8969901-1	. . MICROPHONE-COCKPIT VOICE RECORDER				01	
4	9552006-5	. . ANGLE ASSY				01	
		ATTACHING PARTS					
5	MS35206-227	. . SCREW				02	
		—*—					
- 6	MS21073L06	. . . NUTPLATE				02	
7	2100-1025-22	. COCKPIT VOICE RECORDER UK301	V06141	0501	0522	01	R
- 7A	S3100-628	. COCKPIT VOICE RECORDER UK301		0523	& ON	01	R
8	200-91000-101	. TRAY	V66197			01	
		ATTACHING PARTS					
9	MS24694-S5	. SCREW				04	
		—*—					
10	100-2010-100	. RECORDER POWER SUPPLY UK302	V06141			01	
11	9509207-4	. SHELF ASSY-FWD LWR				01	
12	9554002-51	. . RISER ASSY				02	
13	MS21075L08N	. . . NUTPLATE				02	
14	S261-1130-00	. CONTROL HEAD-COCKPIT VOICE RECORDER	V06141			01	
15	6719605-6	. PEDESTAL STORAGE CUP ASSY				01	

- ITEM NOT ILLUSTRATED

CHAPTER

24

ELECTRICAL POWER

CHAPTER SECTION SUBJECT		NUMBER OF PAGES	DATE
24 - TITLE			
24 - LIST OF EFFECTIVE PAGES			
24 - RECORD OF TEMPORARY REVISIONS			
24 - TABLE OF CONTENTS			
24-20-00	Figure 01	2	May 1/2014
24-20-10	Figure 01	2	May 1/2014
24-20-20	Figure 01	2	May 1/2014
24-20-25	Figure 01	2	May 1/2014
24-30-00	Figure 01	2	Jan 1/2015
24-30-15	Figure 01	2	May 1/2014
24-30-30	Figure 01	4	Apr 1/2015
24-30-35	Figure 01	2	Jan 1/2015
24-30-40	Figure 01	2	May 1/2014
24-30-55	Figure 01	2	May 1/2014
24-35-00	Figure 01	4	May 1/2014
24-40-05	Figure 01	2	May 1/2014
24-50-05	Figure 01	2	May 1/2014
24-60-00	Figure 01	2	Oct 1/2015
24-60-05	Figure 01	4	May 1/2014
24-60-05	Figure 02	4	May 1/2014
24-60-05	Figure 03	4	May 1/2014
24-60-05	Figure 04	4	May 1/2014
24-60-10	Figure 01	10	Oct 1/2015
24-60-10	Figure 02	10	Oct 1/2015
24-60-15	Figure 01	8	May 1/2014
24-60-25	Figure 01	2	Jan 1/2015
24-60-35	Figure 01	2	May 1/2014
24-60-40	Figure 01	2	May 1/2014

© Cessna Aircraft Company

SUBJECT	CHAPTER SECTION SUBJECT	FIGURE	EFFECTIVITY START	EFFECTIVITY END
ALTERNATING CURRENT (AC) GENERATION	24-20-00	01		
POWER CONTROL UNIT - ALTERNATING CURRENT	24-20-10	01		
INVERTER INSTALLATION	24-20-20	01		
AC OVERVOLTAGE MONITOR	24-20-25	01		
DIRECT CURRENT (DC) GENERATION	24-30-00	01		
GENERATOR CONTROL UNIT (GCU)	24-30-15	01		
BATTERY INSTALLATION	24-30-30	01		
NICKEL-CADMIUM BATTERY	24-30-35	01		
LEAD-ACID BATTERY	24-30-40	01		
TRANSFORMER RECTIFIER UNIT (TRU)	24-30-55	01		
AUXILIARY POWER UNIT (APU) DC GENERATION	24-35-00	01		
EXTERNAL POWER RECEPTACLE	24-40-05	01		
AC CIRCUIT BREAKER	24-50-05	01		
JUNCTION BOX STRUCTURE INSTALLATION	24-60-00	01		
CIRCUIT BREAKER PANEL ASSEMBLY - LEFT HAND	24-60-05	01		
CIRCUIT BREAKER PANEL ASSEMBLY - RIGHT HAND	24-60-05	02		
CIRCUIT BREAKERS - LEFT HAND PANEL	24-60-05	03		
CIRCUIT BREAKERS - RIGHT HAND PANEL	24-60-05	04		
LH POWER JUNCTION BOX	24-60-10	01		
RH POWER JUNCTION BOX	24-60-10	02		
EMERGENCY POWER JUNCTION BOX	24-60-15	01		
AFT LOGIC MODULE	24-60-25	01		
FORWARD LOGIC MODULE	24-60-35	01		
AVIONICS JUNCTION BOX - COCKPIT	24-60-40	01		

© Cessna Aircraft Company

A88620

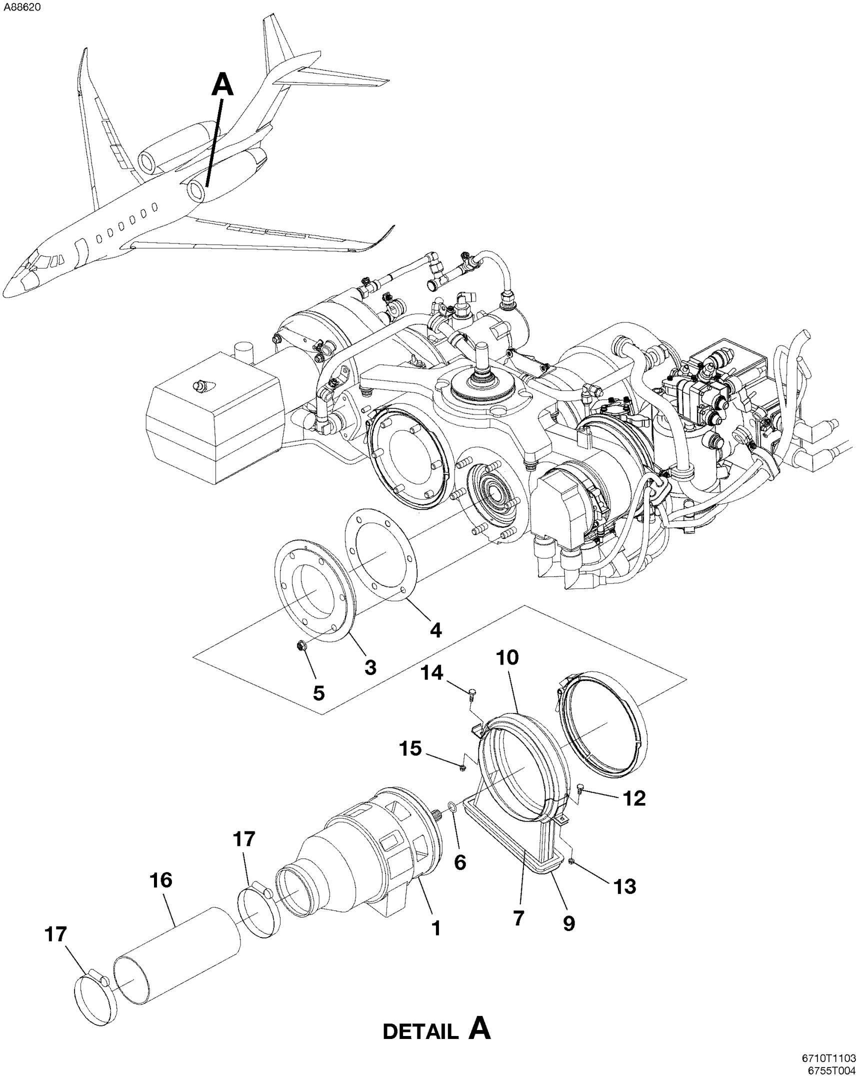

ALTERNATING CURRENT (AC) GENERATION
FIGURE 01 (SHEET 1)

FIG ITEM	PART NUMBER	NOMENCLATURE 1 2 3 4 5 6 7	UNITS PER ASSY
01			
-		ALTERNATING CURRENT (AC) GENERATION	RF
1	9914435-4	. GENERATOR-ALTERNATING CURRENT 3 KVA LH UD005	01
- 2	9914435-4	. GENERATOR-ALTERNATING CURRENT 3 KVA RH UE006	01
		ATTACHING PARTS	
3	9914216-4	. QAD - MOUNTING PAD	01
4	S3366-1	. GASKET	01
5	MS21042-6	. NUT	06
6	M83248/1-113	. O-RING	01
		—*—	
7	6755008-17	. LOWER DUCT ASSY - LH	01
- 8	6755008-18	. LOWER DUCT ASSY - RH	01
9	600-391	. . SEAL-LH AND RH LOWER ENGINE DUCT ASSY V75345	01
10	6755008-35	. UPPER DUCT ASSY - LH	01
- 11	6755008-36	. UPPER DUCT ASSY - RH	01
		ATTACHING PARTS	
12	AN3-5A	. BOLT	02
13	MS21042-3	. NUT	02
		—*—	
14	AN3-3A	. BOLT	01
15	MS21042-3	. NUT	01
16	S3348-12-30	. SLEEVE SLEEVE	02
		ATTACHING PARTS	
17	AN737TW114	. CLAMP	02
		—*—	

- ITEM NOT ILLUSTRATED

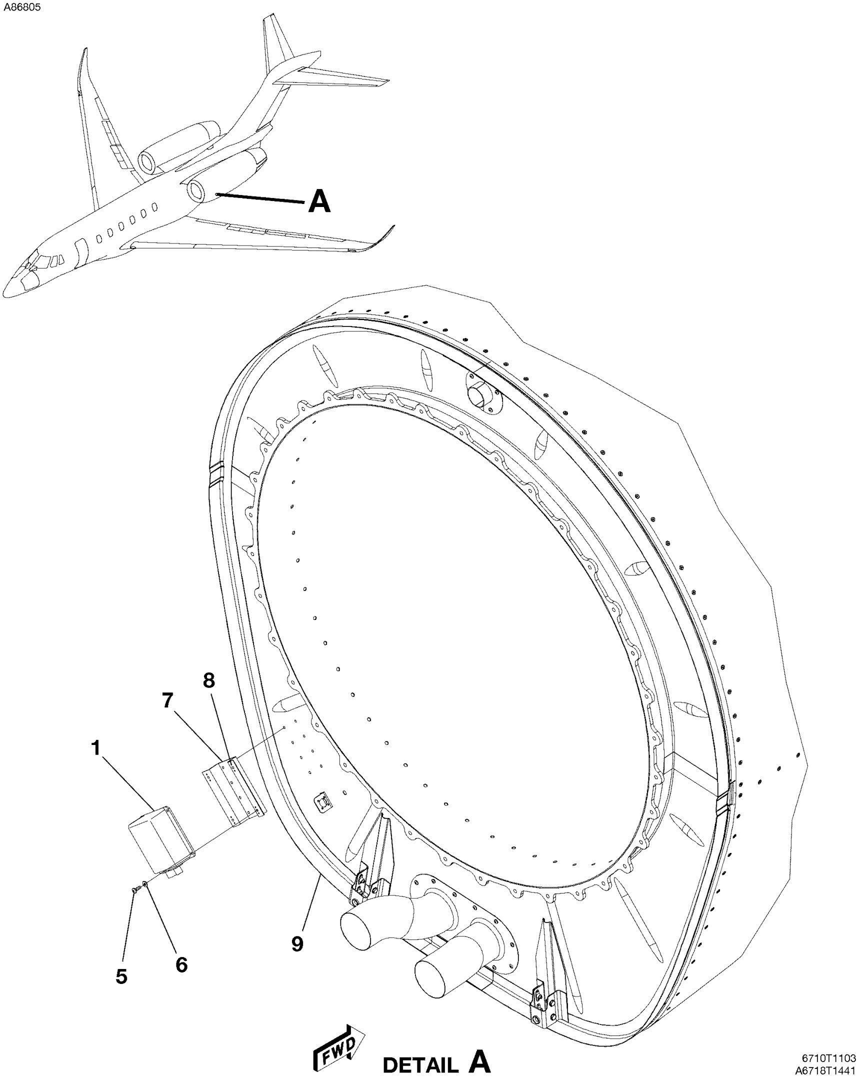

POWER CONTROL UNIT - ALTERNATING CURRENT
FIGURE 01 (SHEET 1)

FIG ITEM	PART NUMBER	NOMENCLATURE 1 2 3 4 5 6 7	UNITS PER ASSY
01			
-		POWER CONTROL UNIT - ALTERNATING CURRENT	RF
1	9914216-2	. POWER CONTROL UNIT-LH UD003 FSO 9914216-6	NP
- 2	9914216-6	. POWER CONTROL UNIT-LH UD003	01
- 3	9914216-2	. POWER CONTROL UNIT-RH UE004 FSO 9914216-6	NP
- 4	9914216-6	. POWER CONTROL UNIT-RH UE004	01
		ATTACHING PARTS	
5	MS27039C1-08	. SCREW	04
6	NAS1149C0363B	. WASHER	04
		—*—	
7	6252019-75	. BRACKET ASSY	01
8	MS21075L3E	. . NUTPLATE	04
9		. NACELLE INLET ASSY REFER TO 71-60-00 FIGURE 01	RF

- ITEM NOT ILLUSTRATED

A87368

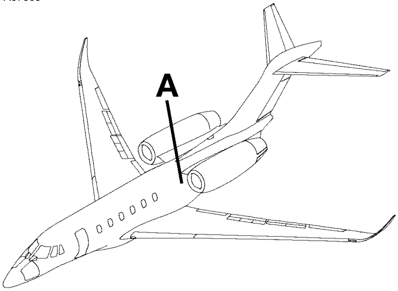

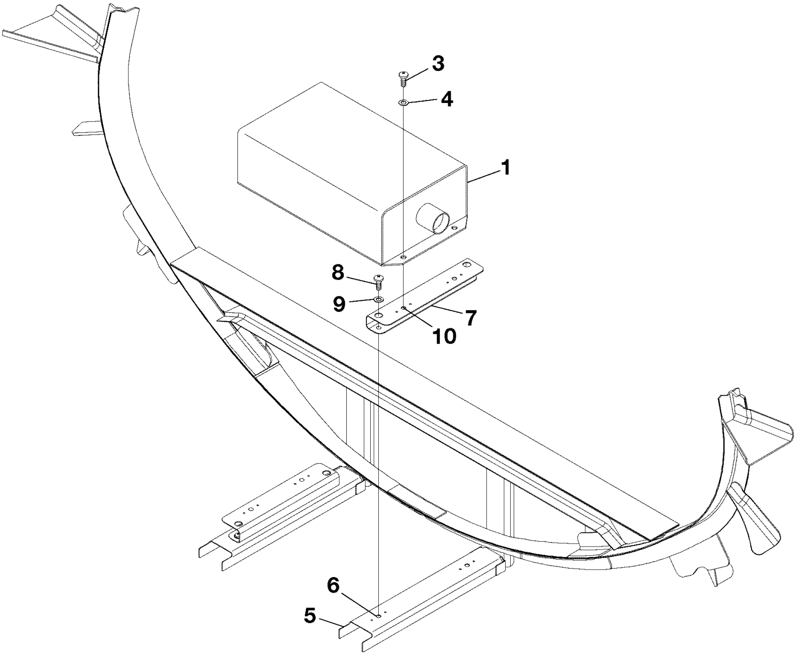

DETAIL A

6710T1103
A9509T203

INVERTER INSTALLATION
FIGURE 01 (SHEET 1)

FIG ITEM	PART NUMBER	NOMENCLATURE 1 2 3 4 5 6 7		UNITS PER ASSY
01				
-		INVERTER INSTALLATION		RF
1	SS120	. INVERTER-115 VOLT DC UK903	V16017	01
- 2	SB120	. INVERTER-230 VOLT DC UK905	V16017	01
		ATTACHING PARTS		
3	MS27039-4-10	. SCREW		04
4	NAS1149F0416P	. WASHER		04
		—*—		
5	9509203-8	. SUPPORT ASSY-INVERTER		02
6	MS21059L3	. . NUTPLATE		02
7	9509203-9	. CHANNEL ASSY-INVERTER		02
		ATTACHING PARTS		
8	MS27039-1-08	. SCREW		02
9	NAS1149F0316P	. WASHER		02
		—*—		
10	MS21059L4	. . NUTPLATE		02

- ITEM NOT ILLUSTRATED

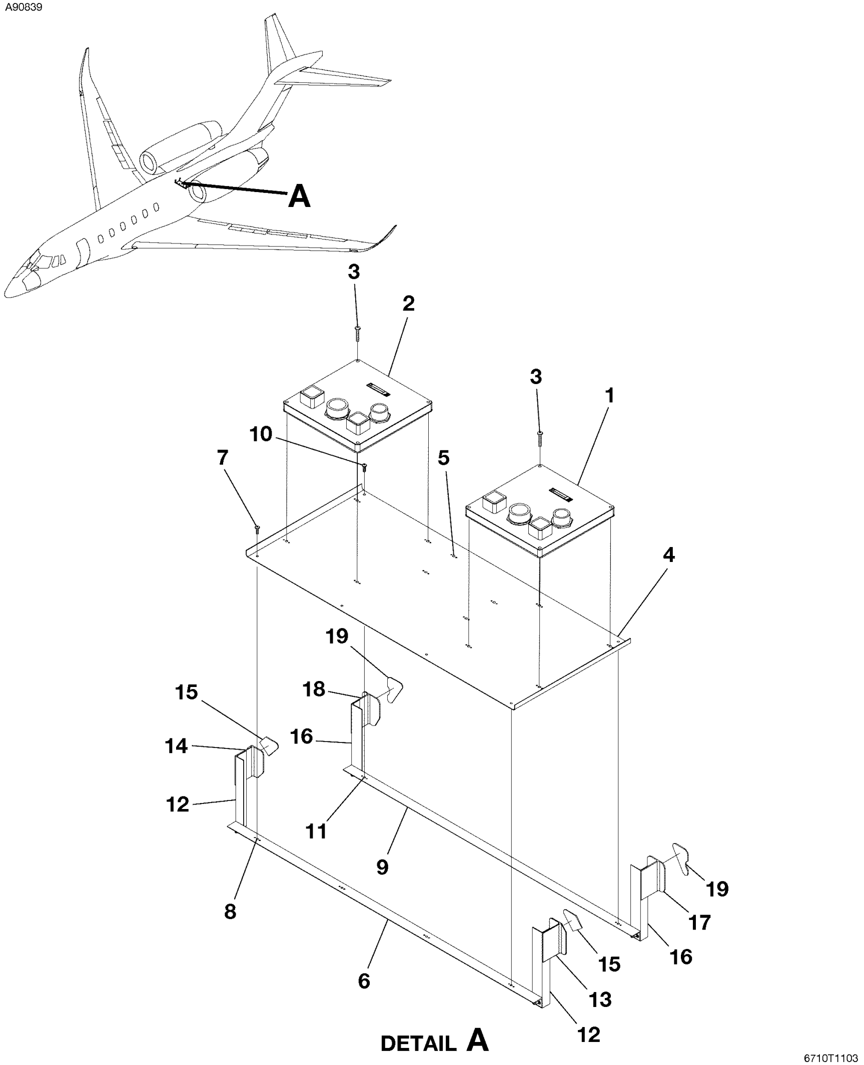

AC OVERVOLTAGE MONITOR
FIGURE 01 (SHEET 1)

FIG ITEM	PART NUMBER	NOMENCLATURE 1 2 3 4 5 6 7	UNITS PER ASSY
01			
-		AC OVERVOLTAGE MONITOR	RF
1	6718025-8	. AC MONITOR ASSY-LH UK907	01
2	6718025-8	. AC MONITOR ASSY-RH UK908	01
		ATTACHING PARTS	
3	MS27039-1-17	. SCREW	04
		—*—	
4	9509207-19	. SHELF ASSY	01
5	MS21075L3N	. . NUTPLATE	12
6	9556002-48	. ANGLE ASSY	01
		ATTACHING PARTS	
7	MS27039-0808	. SCREW	06
		—*—	
8	MS21069L08	. . NUTPLATE	06
9	9509207-25	. ANGLE ASSY	01
		ATTACHING PARTS	
10	MS27039-0808	. SCREW	06
		—*—	
11	MS21069L08	. . NUTPLATE	04
12	9556002-28	. ANGLE	02
13	9556002-29	. CLIP	01
14	9556002-30	. CLIP	01
15	9556002-22	. SPACER	02
16	9556002-34	. ANGLE	02
17	9556002-31	. CLIP	01
18	9556002-32	. CLIP	01
19	9509207-14	. SPACER	02

- ITEM NOT ILLUSTRATED

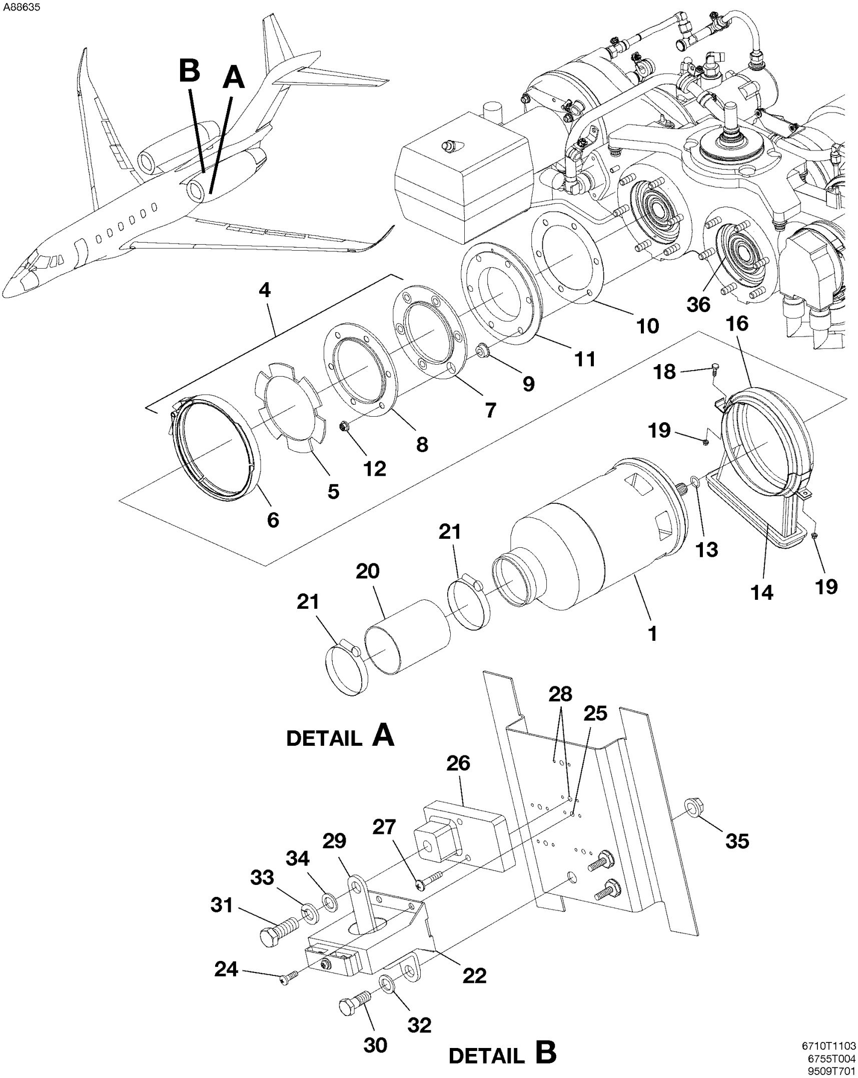

DIRECT CURRENT (DC) GENERATION
FIGURE 01 (SHEET 1)

FIG ITEM	PART NUMBER	NOMENCLATURE 1 2 3 4 5 6 7		UNITS PER ASSY	
01					
-		DIRECT CURRENT (DC) GENERATION		RF	
1	9914752-1	. GENERATOR-400 AMP BRUSHLESS LH UD001		01	
- 2	92046-2	. TERMINAL BLOCK COVER		01	
- 3	9914752-1	. GENERATOR-400 AMP BRUSHLESS RH UE002		01	
4	9914752-4	. QAD MOUNT KIT-DC GENERATOR		01	
5	93089-1	. . DAMPER	V02101	02	
6	713201A610SB	. . COUPLING-V-BAND	V14242	01	
7	93087-1	. . PLATE ASSY-TOP	V02101	01	
8	93088-1	. . PLATE-BOTTOM	V02101	01	
9	93086-1	. . BUSHING	V02101	06	
10	S3366-1	. GASKET		01	
11	6755004-3	. QAD SPACER		01	
12	MS21042-6	. NUT		06	
13	M83248/1-113	. O-RING		01	
14	6755008-17	. LOWER DUCT ASSY - LH		01	
- 15	6755008-18	. LOWER DUCT ASSY - RH		01	
16	6755008-35	. UPPER DUCT ASSY - LH		01	
- 17	6755008-36	. UPPER DUCT ASSY - RH		01	
18	AN3-5A	. BOLT		02	
19	MS21042-3	. NUT		02	
20	S3348-12-22	. SLEEVE		02	
		ATTACHING PARTS			
21	AN737TW114	. CLAMP		02	
		—*—			
22	9914752-3	. TRANSFORMER-CURRENT TORROID LH ENGINE LD001		01	
- 23	9914752-3	. TRANSFORMER-CURRENT TORROID RH ENGINE LE002		01	
		ATTACHING PARTS			
24	MS27039-0808	. SCREW		04	
25	MS21047L08	. NUTPLATE		04	
		—*—			
26	9509308-2	. BLOCK-LH AND RH		02	
		ATTACHING PARTS			
27	MS27039-0814	. SCREW		02	
28	MS21047L08	. NUTPLATE		02	
		—*—			
29	6758007-7	. BUS BAR		02	R
		ATTACHING PARTS			
30	AN6-6A	. BOLT		01	R
31	MS35309-360	. BOLT-BRASS		01	
32	NAS1149F0663P	. WASHER		01	
33	MS35338-103	. WASHER		01	
34	NAS1149B0663H	. WASHER		01	
35	MS21042-6	. NUT		01	
		—*—			
36		. ALTERNATING CURRENT GENERATOR REFER TO 24-20-00 FIGURE 01		RF	

- ITEM NOT ILLUSTRATED

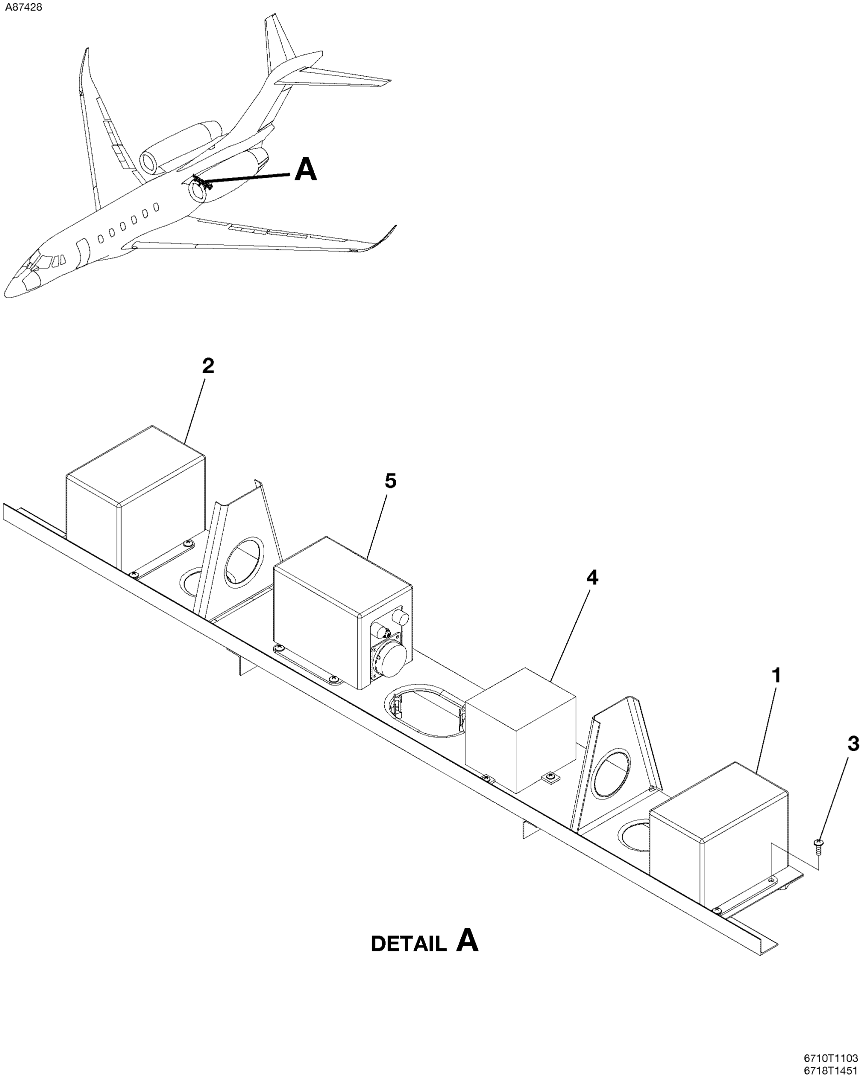

GENERATOR CONTROL UNIT (GCU)
FIGURE 01 (SHEET 1)

FIG ITEM	PART NUMBER	NOMENCLATURE 1 2 3 4 5 6 7	UNITS PER ASSY
01			
-		GENERATOR CONTROL UNIT (GCU)	RF
1	9914752-7	. GENERATOR CONTROL UNIT (GCU)-LH UT043	01
2	9914752-7	. GENERATOR CONTROL UNIT (GCU)-RH UT044	01
		ATTACHING PARTS	
3	MS35207-263	. SCREW	04
		—*—	
4		. FIRE DETECTION CONTROL UNIT REFER TO 26-10-10 FIGURE 01	RF
5		. GENERATOR CONTROL UNIT-APU REFER TO 24-35-00 FIGURE 01	RF

- ITEM NOT ILLUSTRATED

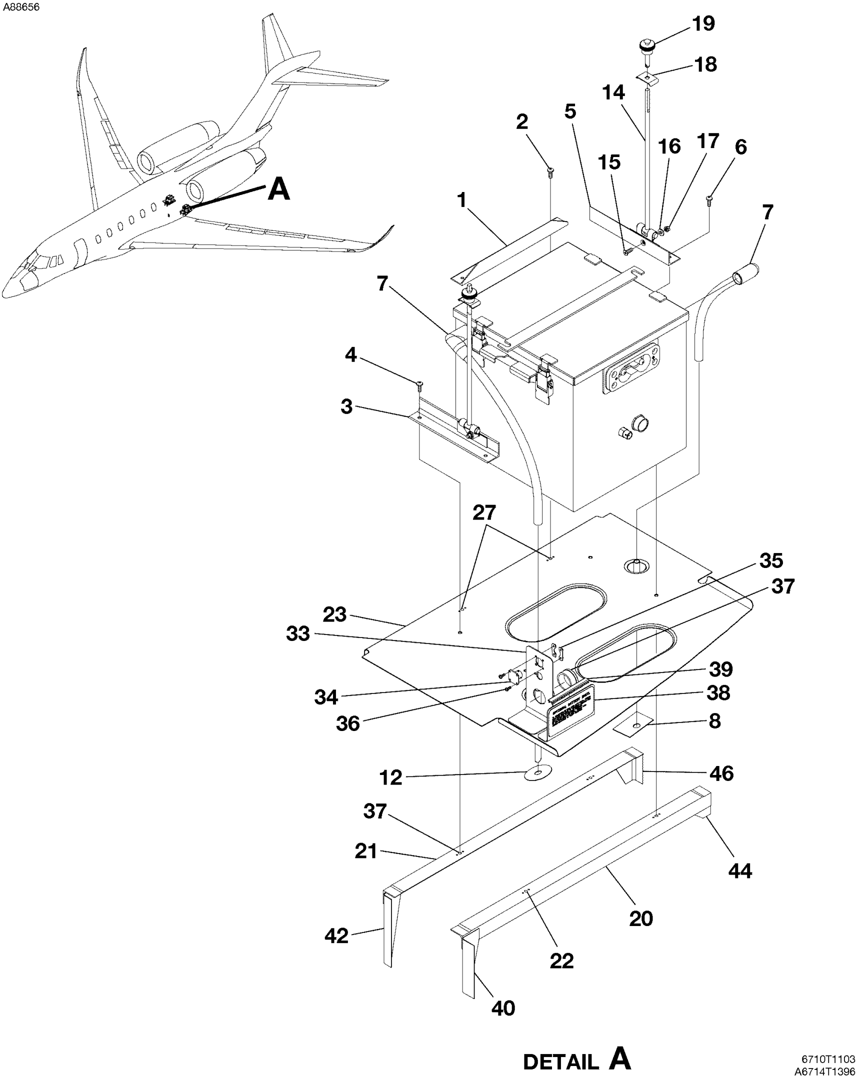

BATTERY INSTALLATION
FIGURE 01 (SHEET 1)

FIG ITEM	PART NUMBER	NOMENCLATURE 1 2 3 4 5 6 7			UNITS PER ASSY
01					
-		BATTERY INSTALLATION			RF
1	6238332-38	. BEAM-LH AND RH			02
		ATTACHING PARTS			
2	MS27039-1-08	. SCREW			02
		—*—			
3	6718310-11	. ROD SUPPORT ASSY-LH AND RH			02
		ATTACHING PARTS			
4	MS27039-1-08	. SCREW			02
		—*—			
5	6718310-13	. ROD SUPPORT ASSY-LH AND RH			02
		ATTACHING PARTS			
6	MS27039-1-08	. SCREW			02
		—*—			
7	S4131-1	. BATTERY VENT TUBE ASSY-LH AND RH			04
8	9509607-17	. AFT VENT EXIT ASSY-LH	0501	0502	01
- 9	9509607-41	. AFT VENT EXIT ASSY-LH	0503	& ON	01
- 10	9509607-18	. AFT VENT EXIT ASSY-RH	0501	0502	01
- 11	9509607-42	. AFT VENT EXIT ASSY-RH	0503	& ON	01
- 11A	9509607-54	. ADAPTER ASSY-LH AND RH	0503	& ON	02
- 11B	9509607-37	. VENT TUBE COUPLER-LH AND RH	0503	& ON	02
- 11C	NAS1922-0200-1	. CLAMP-LH AND RH	0503	& ON	04
12	9509607-19	. FWD VENT EXIT ASSY-LH			01
- 13	9509607-20	. FWD VENT EXIT ASSY-RH			01
14	8718613-18	. BATTERY RETAINER ASSY-LH AND RH			04
		ATTACHING PARTS			
15	MS24694-S50	. SCREW			01
16	NAS1149F0363P	. WASHER			01
17	MS21043-3	. NUT			01
		—*—			
18	8718613-8	. . WASHER-BATTERY RETAINER			01
19	MS14108-3	. . FASTENING ASSY			01
20	9509607-13	. ANGLE ASSY-LH AND RH			02
21	9509607-15	. ANGLE ASSY-LH AND RH			02
22	MS21075L3N	. . NUTPLATE			02
23	9509607-9	. SHELF ASSY - LH	0501	0502	01
- 24	9509607-31	. SHELF ASSY - LH	0503	& ON	01
- 25	9509607-10	. SHELF ASSY - RH	0501	0502	01
- 26	9509607-30	. SHELF ASSY - RH	0503	& ON	01
27	MS21075L3N	. . NUTPLATE-LH			02
- 28	MS21075L3N	. . NUTPLATE-RH			04
- 29	MS21069L06	. . NUTPLATE-RH			02
- 30	9509607-27	. . BRACKET ASSY	0503	& ON	01
- 31	9509607-26	. . CONNECTOR BRACKET	0503	& ON	01
- 32	MS21266-1N	. . GROMMET BKI	0503	& ON	AR
33	9509607-27	. BRACKET ASSY-LH AND RH			02 R
34	MS3115-8L	. RECEPTACLE-LH AND RH			02 R
35	M85528/3-8	. MOUNTING FLANGE-LH AND RH			04 R
		ATTACHING PARTS			
36	MS35206-214	. SCREW			02 R
		—*—			
37	MS3181-14NAL	. COVER-LH AND RH			02 R
38	9509607-26	. CONNECTOR BRACKET-LH AND RH			02 R
39	MS21266-1N	. GROMMET-LH AND RH BKI			AR R
40	6718310-19	. CLIP-LH OUTBD FWD			01
- 41	6718310-16	. CLIP-RH OUTBD FWD			01
42	6718310-17	. CLIP-LH INBD FWD			01
- 43	6718310-18	. CLIP-RH INBD FWD			01
44	6718310-23	. CLIP-LH OUTBD AFT			01
- 45	6718310-22	. CLIP-RH OUTBD AFT			01
46	6718310-21	. CLIP-LH INBD AFT			01
- 47	6718310-20	. CLIP-RH INBD AFT			01

- ITEM NOT ILLUSTRATED

A98406

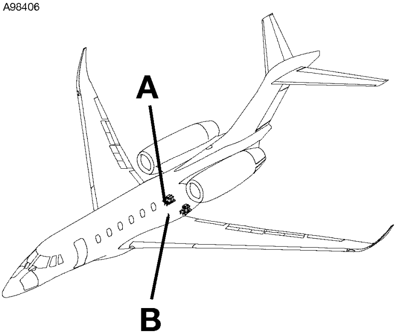

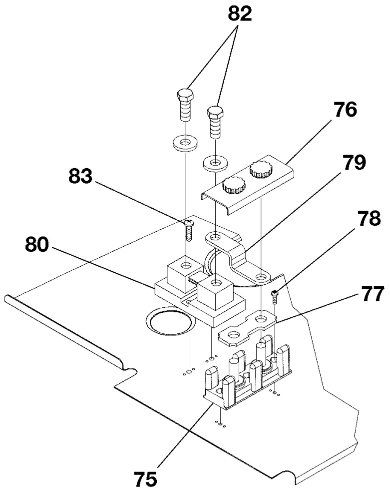

DETAIL A

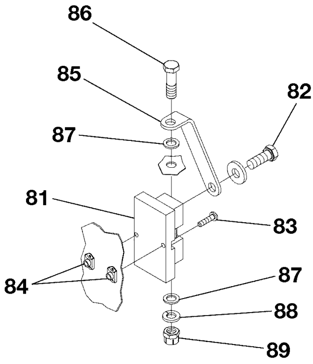

DETAIL B

6710T1103
A–B6714T1396

BATTERY INSTALLATION
FIGURE 01 (SHEET 2)

FIG ITEM	PART NUMBER	NOMENCLATURE 1 2 3 4 5 6 7	UNITS PER ASSY
01			
75	MS27212-5-2	. TERMINAL BOARD ASSY XY902	01
76	MS18029-5S-2	. COVER	01
77	6238019-7	. BUS BAR	01
78	MS35206-229	. SCREW	02
79	6718302-4	. BUS BAR	01
80	CM2916-400	. SHUNT RY904	01
81	CM2916-400	. SHUNT RY903	01
		ATTACHING PARTS	
82	MS35309-360	. BOLT-BRASS	02
83	MS27039-1-12	. SCREW	02
84	MS21075L3N	. NUTPLATE	02
		—*—	
85	6718302-5	. BUS BAR	01
86	AN6-12	. BOLT GY003	01
87	NAS1149F0663P	. WASHER	02
88	MS35338-46	. WASHER	01
89	MS21045L6	. NUT	01

- ITEM NOT ILLUSTRATED

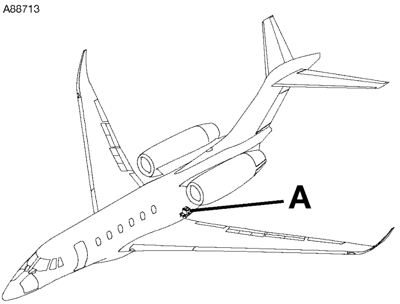

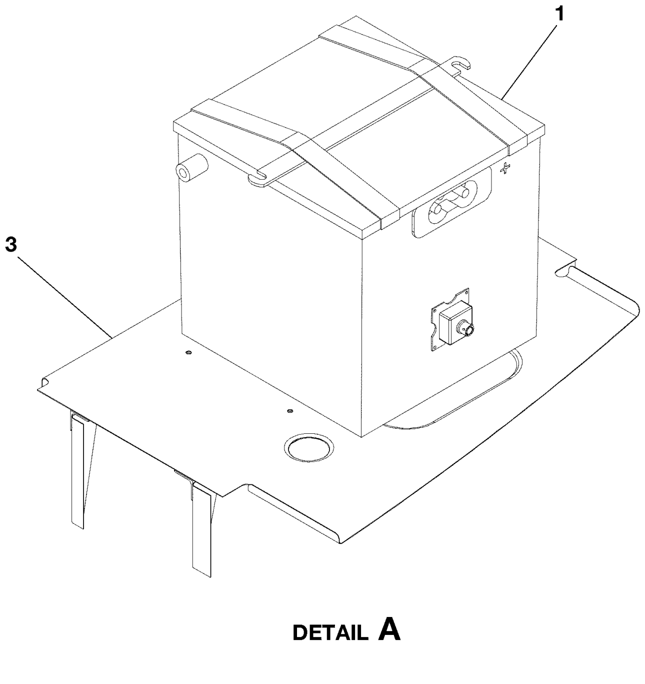

NICKEL-CADMIUM BATTERY
FIGURE 01 (SHEET 1)

FIG ITEM	PART NUMBER	NOMENCLATURE 1 2 3 4 5 6 7			UNITS PER ASSY
01					
-		NICKEL-CADMIUM BATTERY			RF
1	9914058-6	. BATTERY-44A HR MARATHON LH UY903			01
- 1A	9914058-11	. BATTERY-43AMP HR SAFT OPTION LH UY903	0507	& ON	01 R
- 2	9914058-6	. BATTERY-44A HR MARATHON RH UY904			01
- 2A	9914058-11	. BATTERY-43AMP HR SAFT OPTION RH UY904	0507	& ON	01 R
3		. SUPPORT AND HARDWARE REFER TO 24-30-30 FIGURE 01			RF

- ITEM NOT ILLUSTRATED

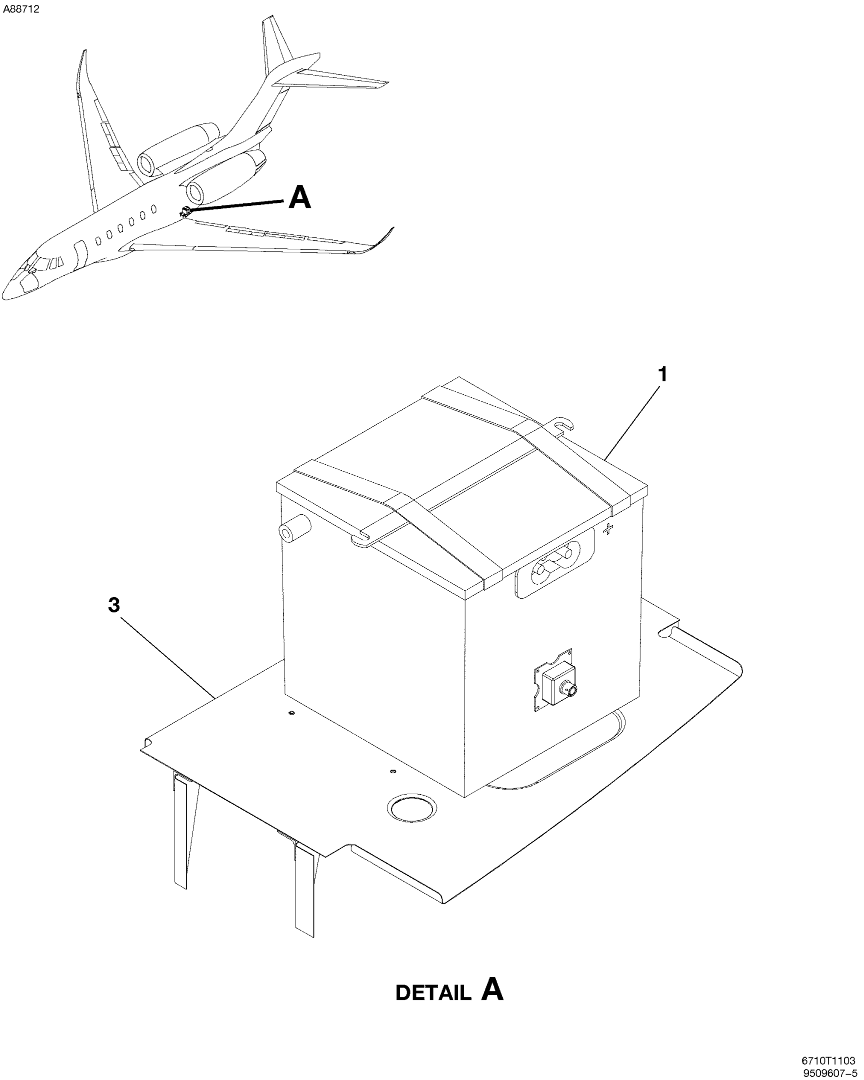

LEAD-ACID BATTERY
FIGURE 01 (SHEET 1)

FIG ITEM	PART NUMBER	NOMENCLATURE 1 2 3 4 5 6 7	UNITS PER ASSY
01			
-		LEAD-ACID BATTERY	RF
1	S3597-8	. BATTERY-LH UY905	01
- 2	S3597-8	. BATTERY-RH UY906	01
3		. SUPPORT AND HARDWARE REFER TO 24-30-30 FIGURE 01	RF

- ITEM NOT ILLUSTRATED

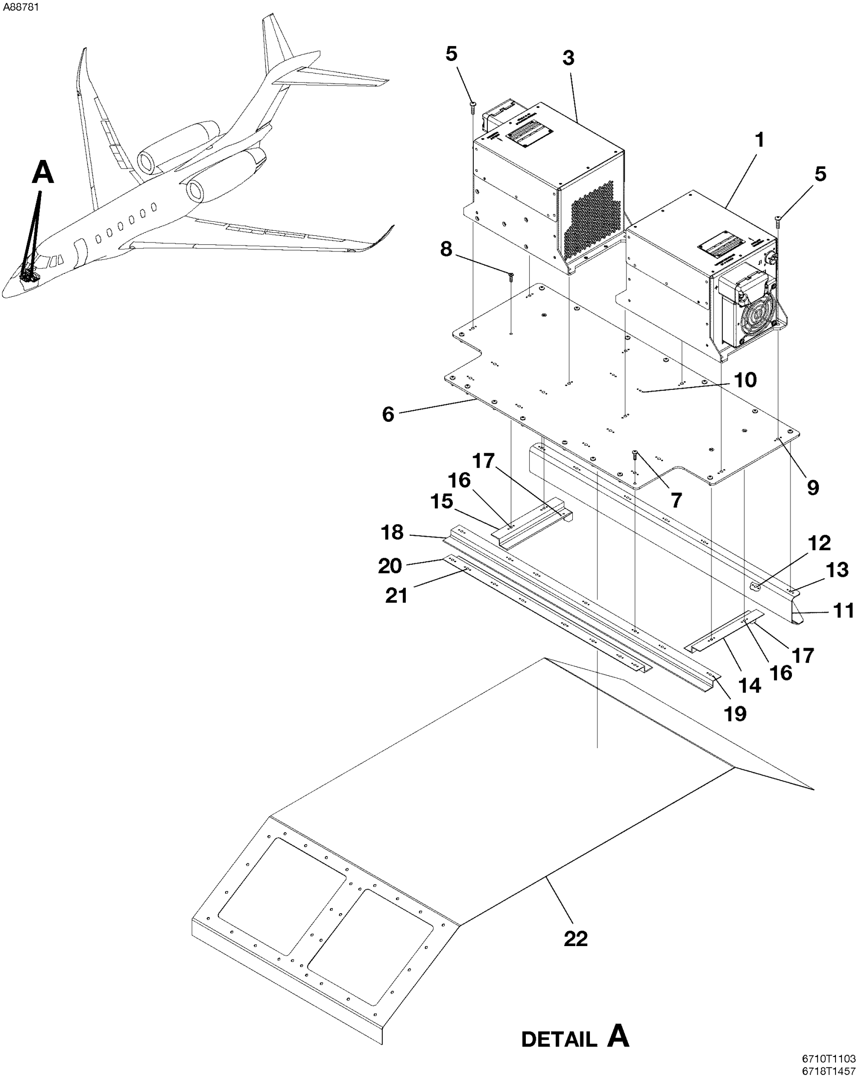

TRANSFORMER RECTIFIER UNIT (TRU)
FIGURE 01 (SHEET 1)

FIG ITEM	PART NUMBER	NOMENCLATURE 1 2 3 4 5 6 7		UNITS PER ASSY
01				
-		TRANSFORMER RECTIFIER UNIT (TRU)		RF
1	TRU1-125-1	. TRANSFORMER RECTIFIER UNIT-LH UN901	V1M2T3	01
- 2	TRU1-125-1A	. TRANSFORMER RECTIFIER UNIT-LH ALT FOR TRU1-125-1 UN901	V1M2T3	01
3	TRU1-125-1	. TRANSFORMER RECTIFIER UNIT-RH UN902	V1M2T3	01
- 4	TRU1-125-1A	. TRANSFORMER RECTIFIER UNIT-RH ALT FOR TRU1-125-1 UN902	V1M2T3	01
		ATTACHING PARTS		
5	MS27039-1-11	. SCREW		04
		—*—		
6	8909011-30	. SHELF ASSY - FWD NOSE		01
		ATTACHING PARTS		
7	MS27039-0808	. SCREW		22
8	MS24694-S5	. SCREW		04
		—*—		
9	MS21075L3N	. . NUTPLATE		16
10	MS21075L06N	. . NUTPLATE		02
11	8909011-18	. CHANNEL ASSY		01
12	MS21075L08N	. . NUTPLATE		07
13	MS21075L3N	. . NUTPLATE		04
14	8909011-23	. ZEE ASSY - LH		01
15	8909011-24	. ZEE ASSY - RH		01
16	MS21075L08N	. . NUTPLATE		02
17	NAS1033A08	. . NUTPLATE		01
18	8909011-8	. ZEE ASSY-LH		01
19	MS21075L08N	. . NUTPLATE		07
20	8909011-6	. ZEE ASSY-RH		01
21	MS21075L08N	. . NUTPLATE		08
22		. NOSE WHEELWELL ASSY REFER TO 53-15-00 FIGURE 02		RF

- ITEM NOT ILLUSTRATED

A87436

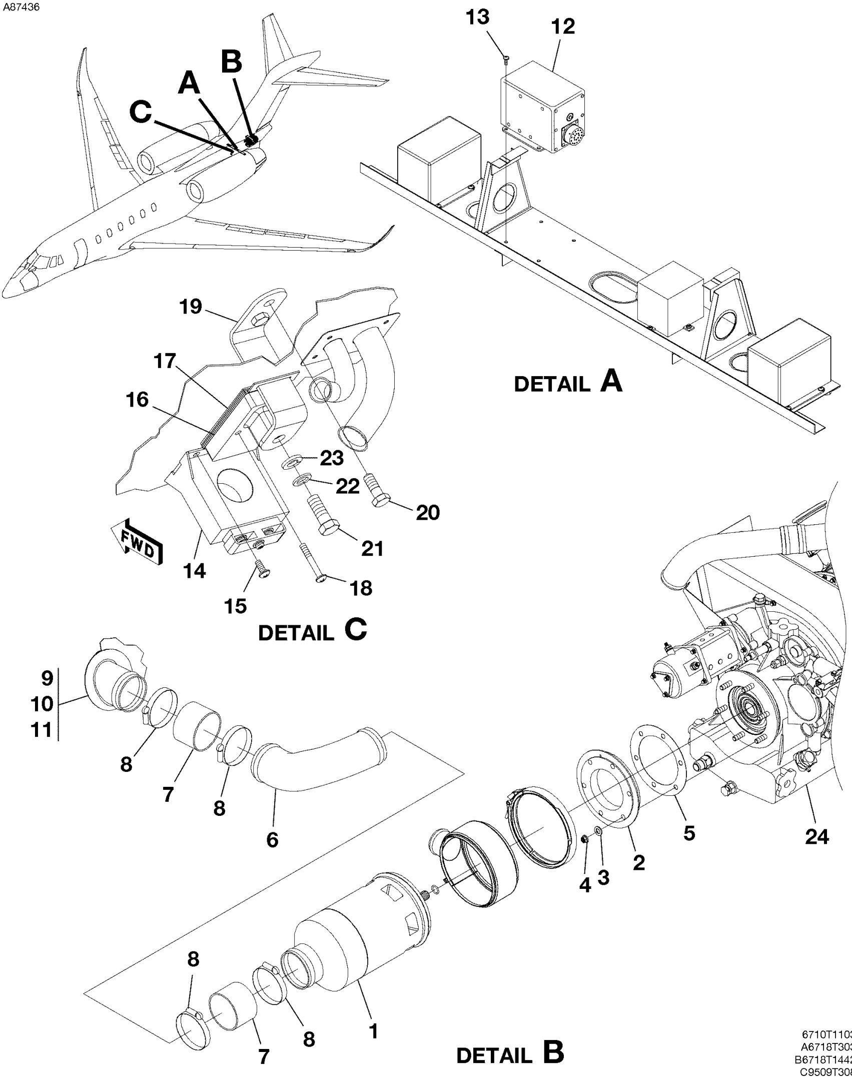

6710T1103
A6718T303
B6718T1442
C9509T308

AUXILIARY POWER UNIT (APU) DC GENERATION
FIGURE 01 (SHEET 1)

FIG ITEM	PART NUMBER	NOMENCLATURE 1 2 3 4 5 6 7	UNITS PER ASSY
01			
-		AUXILIARY POWER UNIT (APU) DC GENERATION	RF
1	9914752-1	. GENERATOR-AUXILIARY POWER UNIT UT003	01
2	9914752-4	. QAD MOUNT-APU GENERATOR	01
		ATTACHING PARTS	
3	NAS1149F0532P	. WASHER	06
4	MS21042-6	. NUT	06
		—*—	
5	6755004-3	. QAD SPACER	01
6	6750603-10	. TUBE ASSY	01
		ATTACHING PARTS	
7	S3348-12-12	. SLEEVE	02
8	MS35842-14	. CLAMP	04
		—*—	
9	6751850-12	. INLET ASSY-APU GENERATOR AIR	01
10	6750603-14	. SCUPPER	01
11	6751850-11	. SCREEN-APU GENERATOR	01
12	9914752-7	. GENERATOR CONTROL UNIT UT045	01
		ATTACHING PARTS	
13	MS35207-263	. SCREW	04
		—*—	
14	9914752-3	. CURRENT XFORMER TORROID LT002	01
		ATTACHING PARTS	
15	MS35207-262	. SCREW	04
		—*—	
16	9509308-2	. BLOCK	01
17	6718311-17	. SHIM	AR
		ATTACHING PARTS	
18	MS35207-268	. SCREW	02
		—*—	
19	6718311-15	. BUS BAR ASSY GT002	01
		ATTACHING PARTS	
20	AN5-6A	. BOLT	02
21	MS35309-360	. BOLT	01
22	NAS1149B0663H	. WASHER	01
23	MS35338-103	. WASHER	01
		—*—	
24		. AUXILIARY POWER UNIT POWER PLANT REFER TO 49-10-00 FIGURE 01	RF

- ITEM NOT ILLUSTRATED

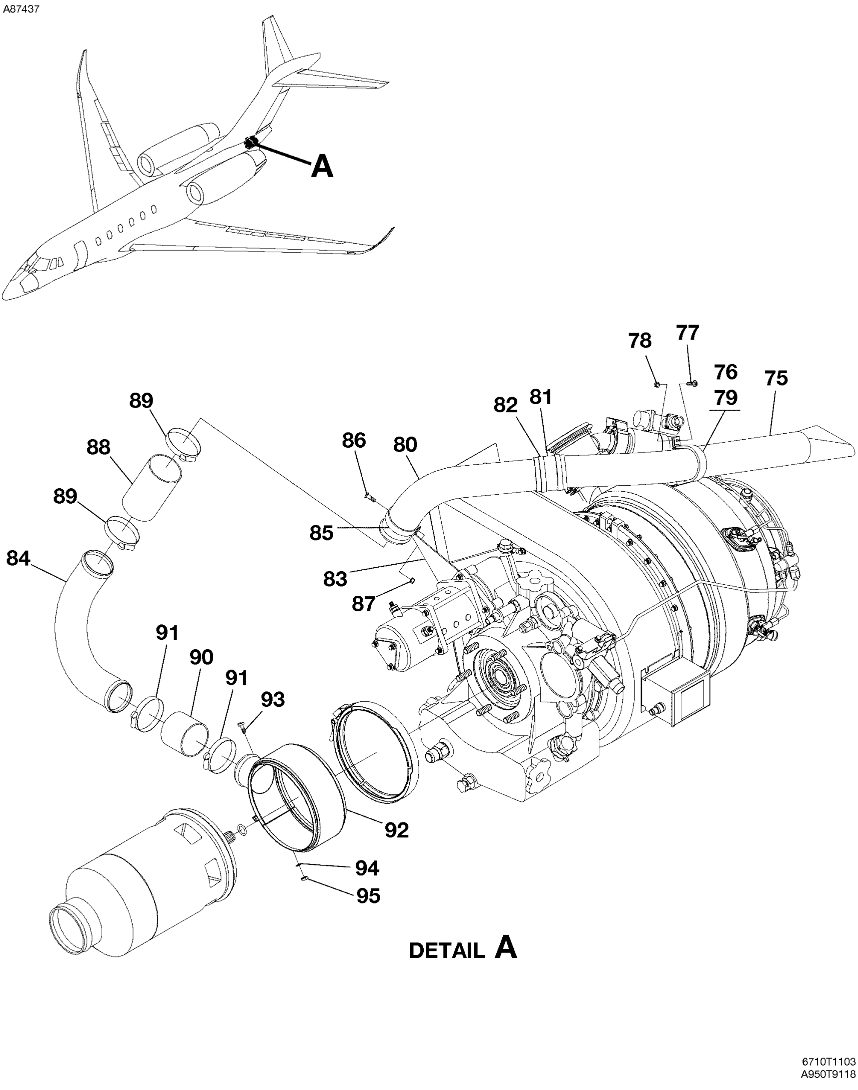

AUXILIARY POWER UNIT (APU) DC GENERATION
FIGURE 01 (SHEET 2)

FIG ITEM	PART NUMBER	NOMENCLATURE 1 2 3 4 5 6 7	UNITS PER ASSY
01			
75	6750603-3	. TUBE ASSY	01
		ATTACHING PARTS	
76	MS21919WCJ32	. CLAMP	01
77	MS27039-1-09	. SCREW	01
78	MS21042-3	. NUT	01
		—*—	
79	6750603-8	. BRACKET	01
80	6750603-2	. TUBE	01
81	S3348-8-10	. SLEEVE	01
		ATTACHING PARTS	
82	MS35842-13	. CLAMP	02
		—*—	
83	6750603-7	. BRACKET	01
84	6750603-1	. TUBE	01
		ATTACHING PARTS	
85	MS21919WCJ32	. CLAMP	01
86	MS27039-1-09	. SCREW	01
87	MS21042-3	. NUT	01
		—*—	
88	S3348-8-10	. SLEEVE	01
		ATTACHING PARTS	
89	MS35842-13	. CLAMP	02
		—*—	
90	S3348-8-10	. SLEEVE	01
		ATTACHING PARTS	
91	MS35842-13	. CLAMP	02
		—*—	
92	6750602-7	. SHROUD ASSY	01
		ATTACHING PARTS	
93	AN3-6	. BOLT	02
94	NAS1149F0332P	. WASHER	04
95	MS21044N3	. NUT	02
		—*—	

- ITEM NOT ILLUSTRATED

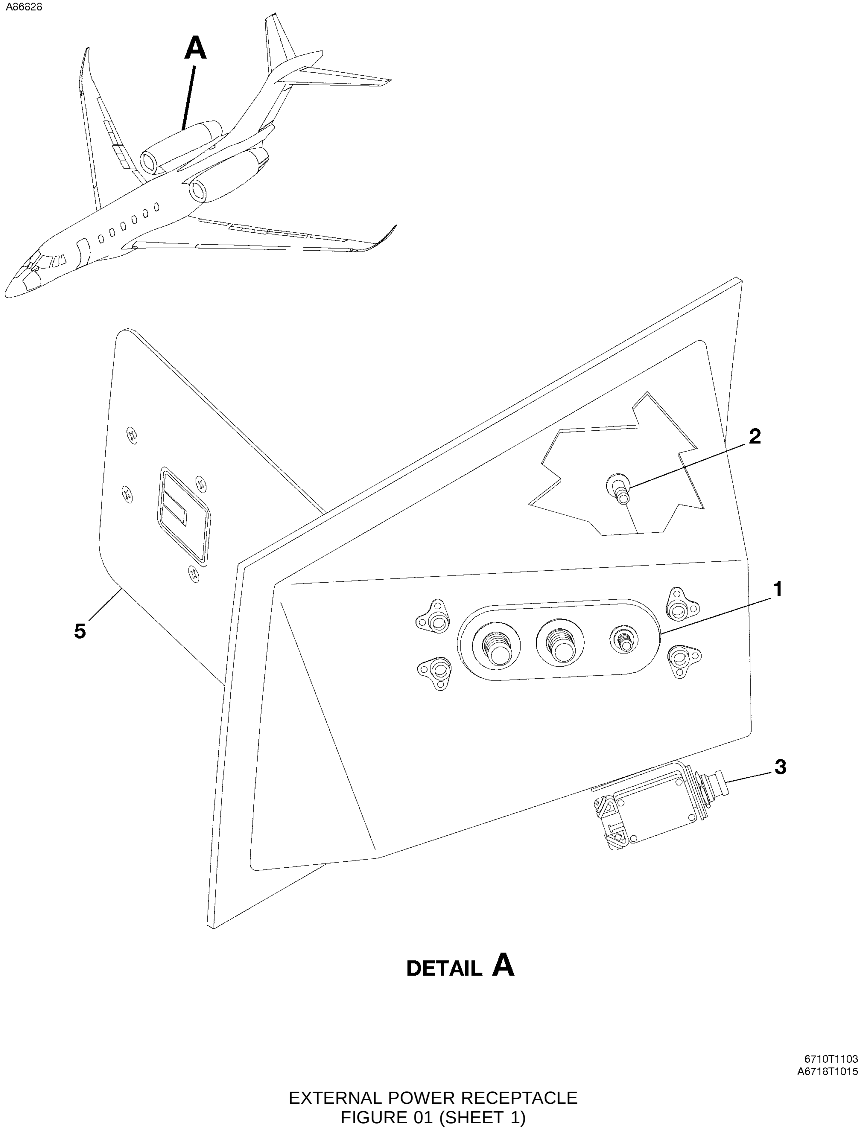

EXTERNAL POWER RECEPTACLE
FIGURE 01 (SHEET 1)

FIG ITEM	PART NUMBER	NOMENCLATURE 1 2 3 4 5 6 7		UNITS PER ASSY
01				
-		EXTERNAL POWER RECEPTACLE		RF
1	MS3506-1	. RECEPTACLE JY008		01
		ATTACHING PARTS		
2	MS27039-1-16	. SCREW		04
		—*—		
3	S2899-5.0	. CIRCUIT BREAKER-OVERVOLTAGE HY002		01
- 4	14500-5	. BOOT	V82647	01
5		. DOOR ASSY REFER TO 52-40-19 FIGURE 01		RF

- ITEM NOT ILLUSTRATED

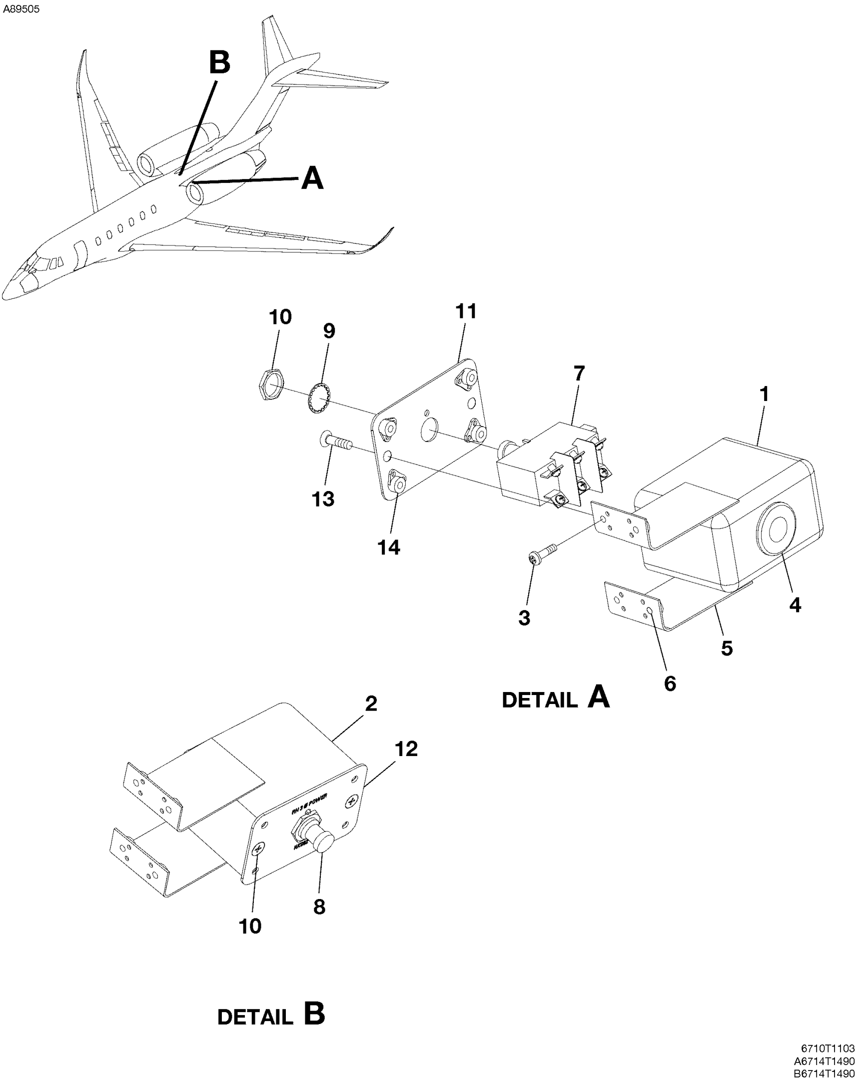

AC CIRCUIT BREAKER
FIGURE 01 (SHEET 1)

FIG ITEM	PART NUMBER	NOMENCLATURE 1 2 3 4 5 6 7	UNITS PER ASSY
01			
-		AC CIRCUIT BREAKER	RF
1	9509212-3	. BOX ASSY-LH	01
2	9509212-4	. BOX ASSY-RH	01
		ATTACHING PARTS	
3	MS35206-230	. SCREW	04
		—*—	
4	MS35489-149	. . GROMMET	01
5	9509212-5	. . ANGLE ASSY	02
6	MS21073L06	. . . NUTPLATE	02
7	S3137-15A	. CIRCUIT BREAKER-LH HK063	01
8	S3137-15A	. CIRCUIT BREAKER-RH HK062	01
9	MS35333-136B	. . LOCKWASHER	01
10	MS25082B21	. . NUT	01
11	6718420-15	. COVER ASSY - LH	01
12	6718420-16	. COVER ASSY - RH	01
		ATTACHING PARTS	
13	MS24693-S51	. SCREW	02
		—*—	
14	MS21073L06	. . NUTPLATE	04

- ITEM NOT ILLUSTRATED

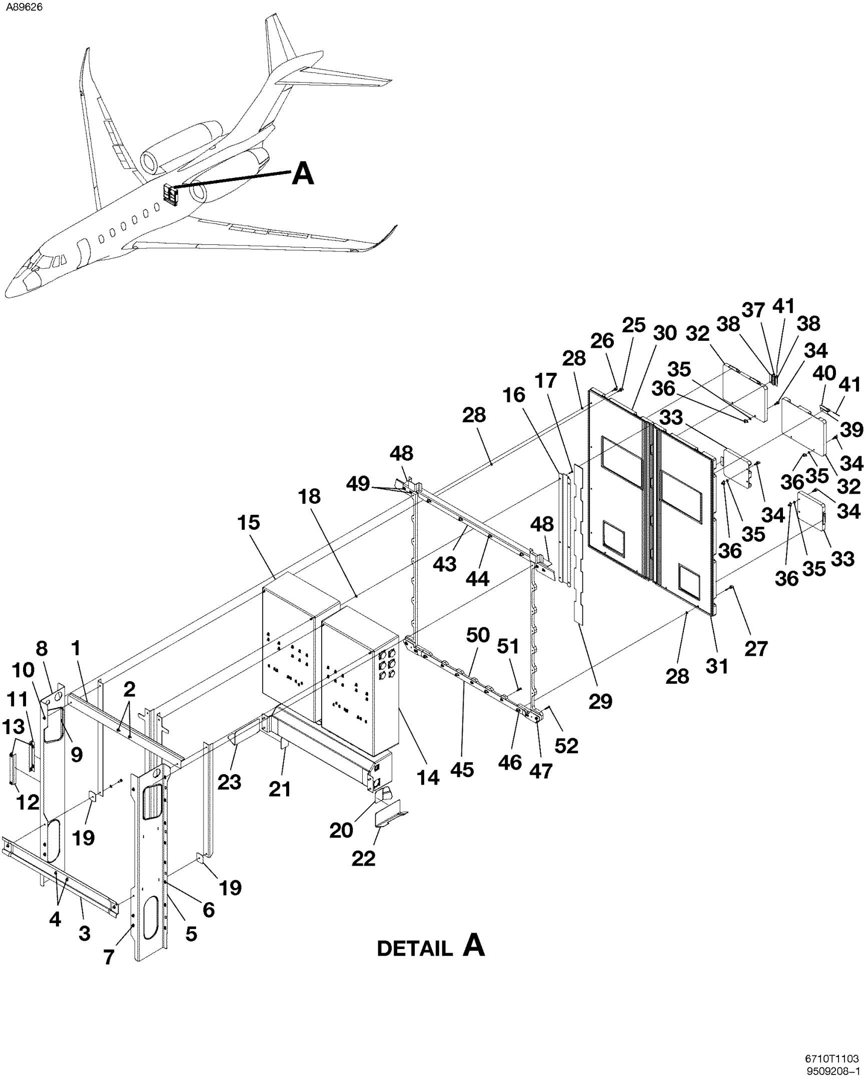

JUNCTION BOX STRUCTURE INSTALLATION
FIGURE 01 (SHEET 1)

FIG ITEM	PART NUMBER	NOMENCLATURE 1 2 3 4 5 6 7	UNITS PER ASSY
01			
-		JUNCTION BOX STRUCTURE INSTALLATION	RF
1	6918303-9	. CROSSBEAM ASSY-MAIN	01
2	MS21069-4	. . NUTPLATE	02
3	9509210-1	. CROSSBEAM ASSY	01
4	MS21069-4	. . NUTPLATE	04
5	9509210-61	. FRAME ASSY-LH	01
6	MS21075L3N	. . NUTPLATE	12
7	MS21069-4	. . NUTPLATE	03
8	9509210-62	. FRAME ASSY-RH	01
9	MS21075L3N	. . NUTPLATE	08
10	MS21069-4	. . NUTPLATE	03
11	6718507-3	. . ANGLE ASSY	01
12	6718507-5	. . CHANNEL ASSY	01
13	MS21075L08N	. . . NUTPLATE	02
14		. LH POWER JUNCTION BOX ASSY REFER TO 24-60-10 FIGURE 01	RF
15		. RH POWER JUNCTION BOX ASSY REFER TO 24-60-10 FIGURE 02	RF
16	9509210-58	. HAT ASSY	01
17	S3275-3R	. . STUD	06
18	S3275-300	. . RETAINER RING	06
19	9509210-11	. SPACER	02
20	9509210-9	. CLIP-AFT LH	01
21	9509210-10	. CLIP-AFT RH	01
22	9509210-7	. CLIP-LWR LH	01
23	9509210-8	. CLIP-LWR RH	01
- 24	6712465-24	. PANEL ASSY-CTR	01
		ATTACHING PARTS	
25	S3275-9W	. STUD	04 R
26	S3275-12W	. STUD	08 R
27	S3275-28W	. STUD	04 R
28	S3275-300	. RETAINER RING	16
		—*—	
29	6712465-19	. . CENTER POST	01
30	6712465-25	. . PANEL BOND ASSY-LH	01
31	6712465-26	. . PANEL BOND ASSY-RH	01
32	6712465-29	. . DOOR-UPR	02
33	6712465-31	. . DOOR-LWR	02
		ATTACHING PARTS	
34	S3275C8W	. . STUD	02
35	S3275-300	. . RETAINER RING	02
36	S3275-401	. . RECEPTACLE	02
		—*—	
37	6712465-10	. . CENTER HINGE ASSY	04
38	6712465-22	. . OUTER HINGE ANGLE ASSY	08
39	6912206-58	. . HINGE ASSY - DOOR	06
40	6912206-40	. . HINGE ASSY - PANEL-FSO 6912206-73	NP
- 40A	6912206-73	. . HINGE ASSY - PANEL-FOR SPARES ONLY	06
41	MS20253-2-170	. . HINGE PIN	14
- 42	CM2919-2-.25	. . SEAL-BKI	AR
43	6712465-4	. ANGLE ASSY-UPR	01
44	S3275-401	. . RECEPTACLE	04
45	6712465-6	. ANGLE ASSY-LWR	01
46	S3275-401	. . RECEPTACLE	04 R
47	MS21075L3N	. . NUTPLATE	07
48	6712465-8	. ANGLE ASSY-UPR OUTBD	01
49	MS21075L3N	. . NUTPLATE	02
50	6712465-12	. FILLER-LWR	01
		ATTACHING PARTS	
51	MS24694-S58	. SCREW	03
52	MS24694-S60	. SCREW	02
		—*—	

- ITEM NOT ILLUSTRATED

A89458

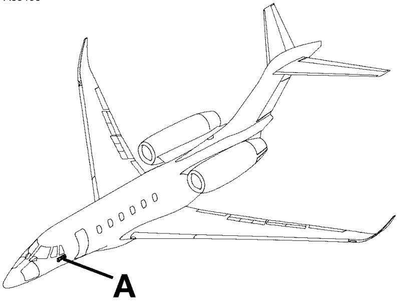

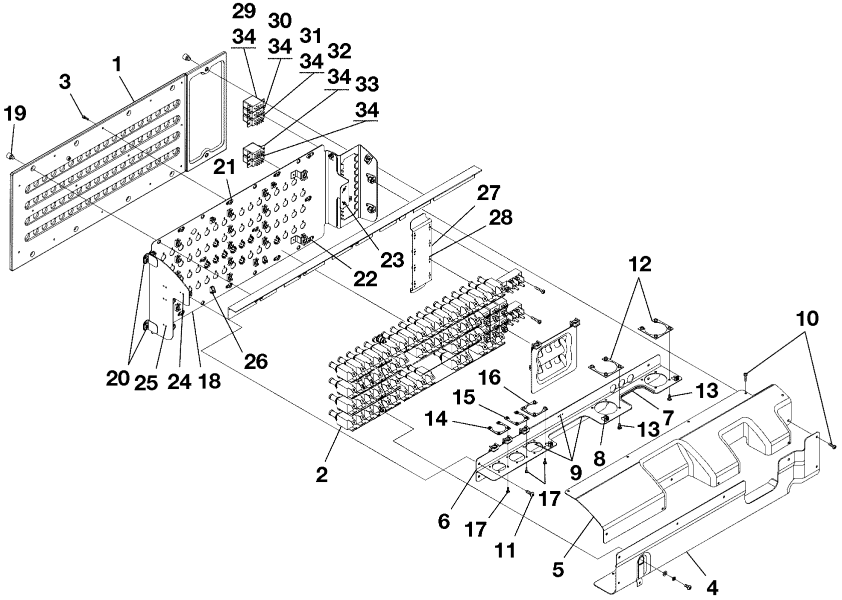

DETAIL A

6710T1103
9509102−3

CIRCUIT BREAKER PANEL ASSEMBLY - LEFT HAND
FIGURE 01 (SHEET 1)

FIG ITEM	PART NUMBER	NOMENCLATURE 1 2 3 4 5 6 7		UNITS PER ASSY
01				
-		CIRCUIT BREAKER PANEL ASSEMBLY - LEFT HAND		RF
1		. LED CIRCUIT BREAKER PANEL REFER TO 33-10-05 FIGURE 01		RF
2	9509103-7	. CIRCUIT BREAKER PANEL ELECTRICAL ASSY-LH		01
		ATTACHING PARTS		
3	NAS1352-04-6	. SCREW		14
		—*—		
4	9509103-3	. . COVER ASSY-LWR LH		01
5	9509103-23	. . PANEL SHIELD-UPR LH		01
6	9509103-17	. . CONNECTOR BRACKET ASSY-LH		01
7	S1050-1	. . . GROMMET BKI		AR
8	S2666-1	. . . NUTPLATE		03
9	MS21069L06	. . . NUTPLATE		03
10	MS35206-230	. . SCREW		AR
11	MS35206-245	. . SCREW		04
12	M85528/2-24-B	. . MOUNTING FLANGE		02
		ATTACHING PARTS		
13	MS35206-227	. . SCREW		04
		—*—		
14	M85528/2-14-A	. . MOUNTING FLANGE		01
15	M85528/2-16-A	. . MOUNTING FLANGE		01
16	M85528/2-18-A	. . MOUNTING FLANGE		01
		ATTACHING PARTS		
17	MS35206-214	. . SCREW		04
		—*—		
18	9509103-15	. . CIRCUIT BREAKER PANEL ASSY-LH		01
19	PFSC35-38A	. . . FASTENER ASSY	V72794	08
20	MS21075L04N	. . . NUTPLATE		02
21	MS21069L04	. . . NUTPLATE		10
22	MS21071L04	. . . NUTPLATE		02
23	MS21069L08	. . . NUTPLATE		02
24	AN256-6	. . . NUTPLATE		05
25	AN256-8	. . . NUTPLATE		01
26	S2666-1	. . . NUTPLATE		08
27	8909118-7	. . . SENSOR MOUNT ASSY		01
28	MS21069L06	. . . . NUTPLATE		08
29	M6106/19-012	. . RELAY L TEMP PROBE KC001		01
30	M6106/19-012	. . RELAY L PITOT HEAT KC002		01
31	M83536/9-024	. . RELAY L AOA COMP KC004		01
32	M83536/9-024	. . RELAY EMER PWR KC003		01
33	M83536/9-024	. . RELAY STBY LED DIM KC005		01
		ATTACHING PARTS		
34	450040150	. . JRS HARDWARE PACKAGE	V58982	02
		—*—		
- 35	200002200	. . . SCREW	V58982	01
- 36	200692250	. . . CONICAL SPRING	V58982	01
- 37	200002600	. . . THREADED SPACER	V58982	01

- ITEM NOT ILLUSTRATED

A89459

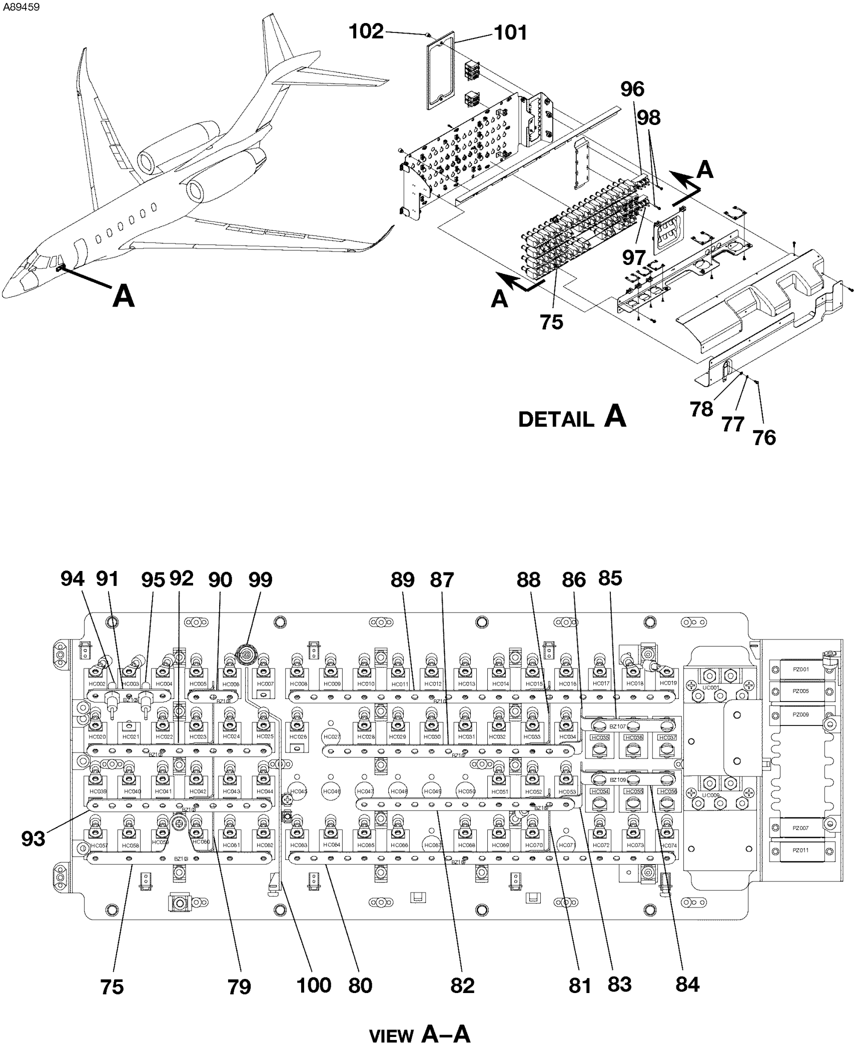

6710T1103
AA9509103–7

CIRCUIT BREAKER PANEL ASSEMBLY - LEFT HAND
FIGURE 01 (SHEET 2)

FIG ITEM	PART NUMBER	NOMENCLATURE 1 2 3 4 5 6 7		UNITS PER ASSY
01				
75	8909118-22	. . BUS BAR ASSY REFER TO NOTE 1 1BZ103		01
76	MS35206-243	. . SCREW		01
77	MS35338-42	. . WASHER		01
78	NAS1149FN816P	. . WASHER		01
79	S4015-1LLLL	. . BUS BAR REFER TO NOTE 1 2BZ103		01
80	S4014-11	. . BUS BAR REFER TO NOTE 1 5BZ109		01
81	S4015-1LL	. . BUS BAR REFER TO NOTE 1 4BZ109		01
82	S4014-6	. . BUS BAR REFER TO NOTE 1 3BZ109		01
83	6618127-26	. . BUS BAR VERTICAL REFER TO NOTE 1 AND NOTE 2 2BZ109		01
84	6718189-1	. . BUS BAR HORIZONTAL REFER TO NOTE 2 1BZ109		01
85	6718189-1	. . BUS BAR HORIZONTAL REFER TO NOTE 2 1BZ107		01
86	6618127-26	. . BUS BAR VERTICAL REFER TO NOTE 1 AND NOTE 2 2BZ107		01
87	S4014-7	. . BUS BAR REFER TO NOTE 1 3BZ107		01
88	S4015-1LL	. . BUS BAR REFER TO NOTE 1 4BZ107		01
89	S4014-11	. . BUS BAR REFER TO NOTE 1 5BZ107		01
90	S4014-1	. . BUS BAR REFER TO NOTE 1 5BZ103		01
91	S4014-2	. . BUS BAR REFER TO NOTE 1 1BZ105		01
92	S4014-5	. . BUS BAR REFER TO NOTE 1 4BZ103		01
93	S4014-5	. . BUS BAR REFER TO NOTE 1 3BZ103		01
94	1N1201	. . DIODE DC040	V07688	01
95	1N1201	. . DIODE DC041	V07688	01
96	76250-6	. . CURRENT SENSOR UC001	V2X920	01
97	76552-1	. . SENSOR UC009	V2X920	01
		ATTACHING PARTS		
98	MS35206-232	. . SCREW		02
		—*—		
99	MS90335-5	. . CONNECTOR PC071		01
100	9509103-9	. . DIVIDER ASSY-LH		01
101	8909118-19	. RELAY COVER ASSY		01
102	PFSC35-38A	. . FASTENER ASSY	V72794	02

NOTE 1—WHEN ATTACHING 2 BUS BARS AND TERMINALS TO S2899 SERIES CIRCUIT BREAKERS, REPLACE VENDOR SUPPLIED SCREW WITH AN508-6-4 SCREW; WHEN ATTACHING 3 BUS BARS AND TERMINALS TO S2899 SERIES CIRCUIT BREAKERS, REPLACE VENDOR SUPPLIED SCREW WITH AN508-6-5 SCREW.

NOTE 2—WHEN ATTACHING 2 BUS BARS AND TERMINALS TO 700 SERIES CIRCUIT BREAKERS, REPLACE VENDOR SUPPLIED SCREW WITH MS51957-42 SCREW; WHEN ATTACHING 3 BUS BARS AND TERMINALS TO 700 SERIES CIRCUIT BREAKERS, REPLACE VENDOR SUPPLIED SCREW WITH MS51957-43 SCREW.

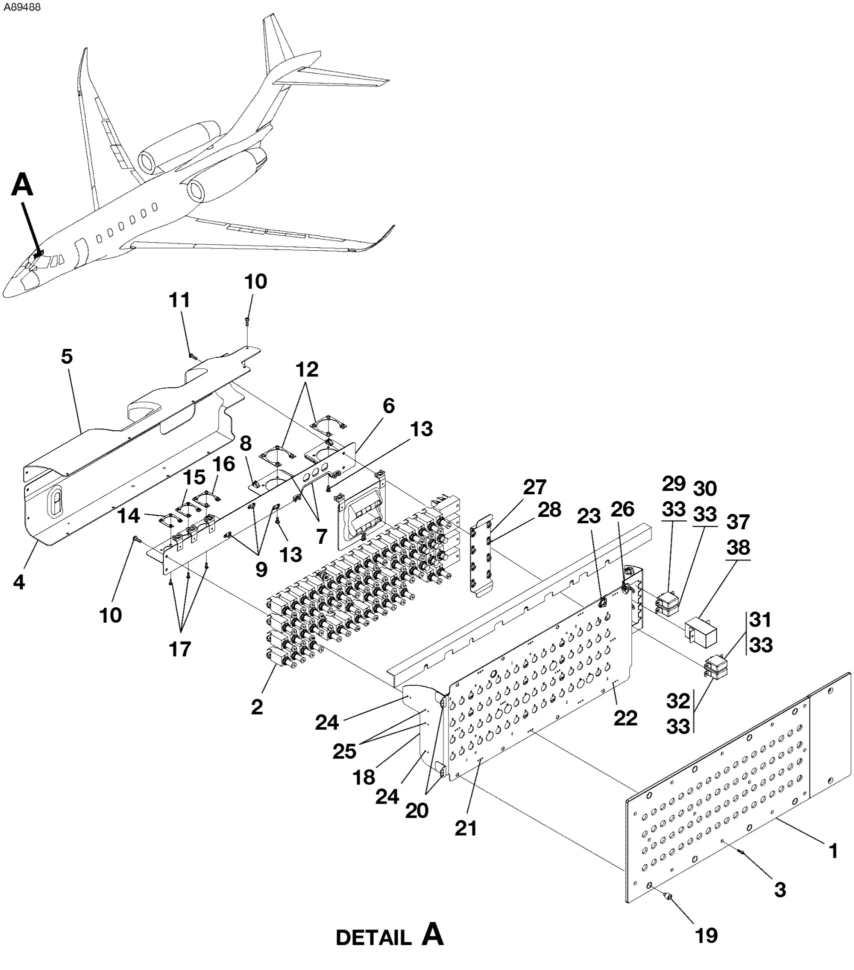

CIRCUIT BREAKER PANEL ASSEMBLY - RIGHT HAND
FIGURE 02 (SHEET 1)

FIG ITEM	PART NUMBER	NOMENCLATURE 1 2 3 4 5 6 7		UNITS PER ASSY
02				
-		CIRCUIT BREAKER PANEL ASSEMBLY - RIGHT HAND		RF
1		. LED CIRCUIT BREAKER PANEL REFER TO 33-10-05 FIGURE 01		RF
2	9509103-8	. CIRCUIT BREAKER PANEL ELECTRICAL ASSY-RH		01
		ATTACHING PARTS		
3	NAS1352-04-6	. SCREW		14
		—*—		
4	9509103-4	. . COVER ASSY-LWR RH		01
5	9509103-24	. . PANEL SHIELD-UPR RH		01
6	9509103-18	. . CONNECTOR BRACKET ASSY-RH		01
7	S1050-1	. . . GROMMET BKI		AR
8	S2666-1	. . . NUTPLATE		03
9	MS21069L06	. . . NUTPLATE		03
10	MS35206-230	. . SCREW		AR
11	MS35206-245	. . SCREW		04
12	M85528/2-24-B	. . MOUNTING FLANGE		02
		ATTACHING PARTS		
13	MS35206-227	. . SCREW		04
		—*—		
14	M85528/2-14-A	. . MOUNTING FLANGE		01
15	M85528/2-16-A	. . MOUNTING FLANGE		01
16	M85528/2-18-A	. . MOUNTING FLANGE		01
		ATTACHING PARTS		
17	MS35206-214	. . SCREW		04
		—*—		
18	9509103-16	. . CIRCUIT BREAKER PANEL ASSY-RH		01
19	PFSC35-38A	. . . FASTENER ASSY	V72794	08
20	MS21075L04N	. . . NUTPLATE		02
21	MS21069L04	. . . NUTPLATE		10
22	MS21071L04	. . . NUTPLATE		02
23	MS21069L08	. . . NUTPLATE		02
24	AN256-6	. . . NUTPLATE		05
25	AN256-8	. . . NUTPLATE		02
26	S2666-1	. . . NUTPLATE		08
27	8909118-7	. . . SENSOR MOUNT ASSY		01
28	MS21069L06	. . . . NUTPLATE		08
29	M6106/19-012	. . RELAY R TEMP PROBE KF001		01
30	M6106/19-012	. . RELAY R PITOT HEAT KF002		01
31	M83536/9-024	. . RELAY R AOA COMP KF004		01
32	M6106/19-012	. . RELAY STBY PITOT HEAT KF003		01
		ATTACHING PARTS		
33	450040150	. . JRS HARDWARE PACKAGE	V58982	02
		—*—		
- 34	200002200	. . . SCREW	V58982	01
- 35	200692250	. . . CONICAL SPRING	V58982	01
- 36	200002600	. . . THREADED SPACER	V58982	01
37	76538-100YD	. . TIME DELAY RELAY KF005	V2X920	01
		ATTACHING PARTS		
38	MS35206-227	. . SCREW		03
		—*—		
- 39	9509103-25	. . PLACARD-RH RELAY		01

- ITEM NOT ILLUSTRATED

A89489

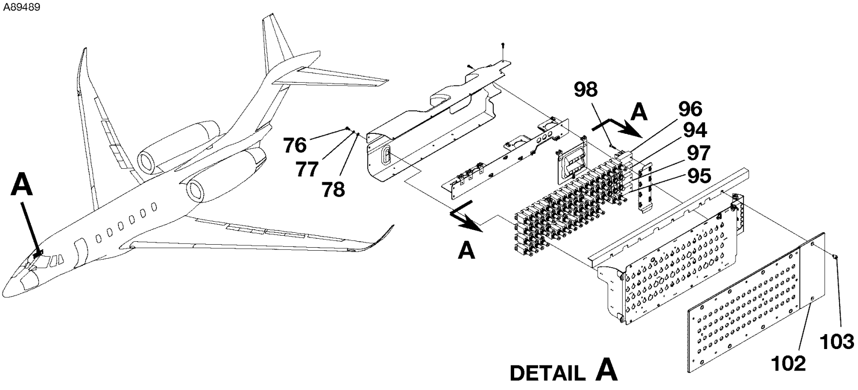

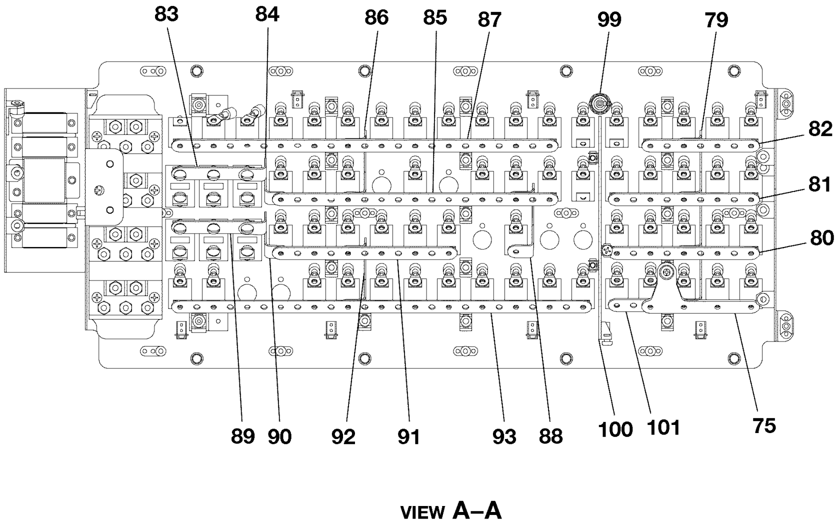

6710T1103
9509102–4

CIRCUIT BREAKER PANEL ASSEMBLY - RIGHT HAND
FIGURE 02 (SHEET 2)

FIG ITEM	PART NUMBER	NOMENCLATURE 1 2 3 4 5 6 7		UNITS PER ASSY
02				
75	8909118-24	. . BUS BAR ASSY REFER TO NOTE 1 1BZ102		01
76	MS35206-243	. . SCREW		01
77	MS35338-42	. . WASHER		01
78	NAS1149FN816P	. . WASHER		01
79	S4015-1LLLL	. . BUS BAR REFER TO NOTE 1 2BZ102		01
80	S4014-4	. . BUS BAR REFER TO NOTE 1 3BZ102		01
81	S4014-4	. . BUS BAR REFER TO NOTE 1 4BZ102		01
82	S4014-3	. . BUS BAR REFER TO NOTE 1 5BZ102		01
83	6718189-1	. . BUS BAR HORIZONTAL REFER TO NOTE 2 1BZ104		01
84	6618127-31	. . BUS BAR VERTICAL REFER TO NOTE 1 AND NOTE 2 2BZ104		01
85	S4014-8	. . BUS BAR REFER TO NOTE 1 3BZ104		01
86	S4015-1LL	. . BUS BAR REFER TO NOTE 1 4BZ104		01
87	S4014-11	. . BUS BAR REFER TO NOTE 1 5BZ104		01
88	S4015-1LL	. . BUS BAR REFER TO NOTE 1 6BZ104		01
89	6718189-1	. . BUS BAR HORIZONTAL REFER TO NOTE 2 1BZ106		01
90	6618127-31	. . BUS BAR VERTICAL REFER TO NOTE 1 AND NOTE 2 2BZ106		01
91	S4014-5	. . BUS BAR REFER TO NOTE 1 3BZ106		01
92	S4015-1LL	. . BUS BAR REFER TO NOTE 1 4BZ106		01
93	S4014-12	. . BUS BAR REFER TO NOTE 1 5BZ106		01
94	76250-6	. . CURRENT SENSOR UF010	V2X920	01
95	76250-6	. . CURRENT SENSOR UF012	V2X920	01
96	76552-1	. . SENSOR UF009	V2X920	01
97	76552-1	. . SENSOR UF011	V2X920	01
		ATTACHING PARTS		
98	MS35206-232	. . SCREW		02
		—*—		
99	MS90335-5	. . CONNECTOR PF071		01
100	9509103-10	. . DIVIDER ASSY-RH		01
101	S4014-1	. . BUS BAR REFER TO NOTE 1 6BZ102		01
102	8909118-19	. RELAY COVER ASSY		01
103	PFSC35-38A	. . FASTENER ASSY	V72794	02

NOTE 1—WHEN ATTACHING 2 BUS BARS AND TERMINALS TO S2899 SERIES CIRCUIT BREAKERS, REPLACE VENDOR SUPPLIED SCREW WITH AN508-6-4 SCREW; WHEN ATTACHING 3 BUS BARS AND TERMINALS TO S2899 SERIES CIRCUIT BREAKERS, REPLACE VENDOR SUPPLIED SCREW WITH AN508-6-5 SCREW.

NOTE 2—WHEN ATTACHING 2 BUS BARS AND TERMINALS TO 700 SERIES CIRCUIT BREAKERS, REPLACE VENDOR SUPPLIED SCREW WITH MS51957-42 SCREW; WHEN ATTACHING 3 BUS BARS AND TERMINALS TO 700 SERIES CIRCUIT BREAKERS, REPLACE VENDOR SUPPLIED SCREW WITH MS51957-43 SCREW.

- ITEM NOT ILLUSTRATED

A89486

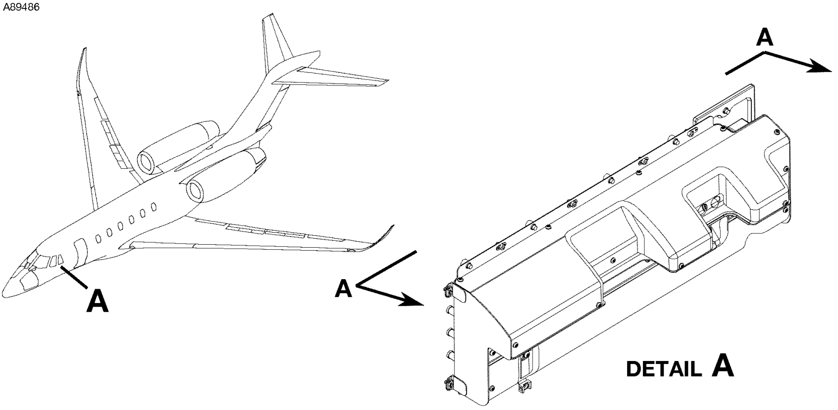

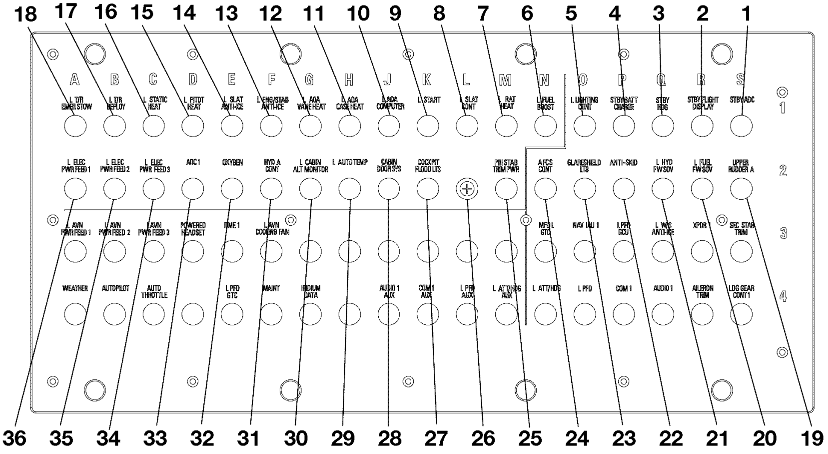

VIEW A–A

6710T1103
6714T1439

CIRCUIT BREAKERS - LEFT HAND PANEL
FIGURE 03 (SHEET 1)

FIG ITEM	PART NUMBER	NOMENCLATURE 1 2 3 4 5 6 7	UNITS PER ASSY
03			
-		CIRCUIT BREAKERS - LEFT HAND PANEL	RF
1	S2899L5.0	. CIRCUIT BREAKER-STBY ADC HC002	01
2	S2899L5.0	. CIRCUIT BREAKER-STBY FLIGHT DISPLAY HC003	01
3	S2899L5.0	. CIRCUIT BREAKER-STBY HDG HC004	01
4	S2899L15.0	. CIRCUIT BREAKER-STBY BATT CHARGE HC005	01
5	S2899L5.0	. CIRCUIT BREAKER-L LIGHTING CONT HC006	01
6	S2899L0.5	. CIRCUIT BREAKER-L FUEL BOOST HC007	01
7	S2899L15.0	. CIRCUIT BREAKER-L RAT HEAT HC008	01
8	S2899L5.0	. CIRCUIT BREAKER-L SLAT CONT HC009	01
9	S2899L3.0	. CIRCUIT BREAKER-L START HC010	01
10	S2899L5.0	. CIRCUIT BREAKER-L AOA COMPUTER HC011	01
11	S2899L7.5	. CIRCUIT BREAKER-L AOA CASE HEAT HC012	01
12	S2899L7.5	. CIRCUIT BREAKER-L AOA VANE HEAT HC013	01
13	S2899L5.0	. CIRCUIT BREAKER-L ENG/STAB ANYI-ICE HC014	01
14	S2899L5.0	. CIRCUIT BREAKER-L SLAT ANTI-ICE HC015	01
15	S2899L15.0	. CIRCUIT BREAKER-L PITOT HEAT HC016	01
16	S2899L5.0	. CIRCUIT BREAKER-L STATIC HEAT HC017	01
17	S2899L5.0	. CIRCUIT BREAKER-L T/R DEPLOY HC018	01
18	S2899L5.0	. CIRCUIT BREAKER-L T/R EMER STOW HC019	01
19	S2899L5.0	. CIRCUIT BREAKER-UPPER RUDDER A HC020	01
20	S2899L5.0	. CIRCUIT BREAKER-L FUEL FW SOV HC021	01
21	S2899L5.0	. CIRCUIT BREAKER-L FHYD FW SOV HC022	01
22	S2899L5.0	. CIRCUIT BREAKER-ANTI-SKID HC023	01
23	S2899L5.0	. CIRCUIT BREAKER-GLARESHIELD LTS HC024	01
24	S2899L5.0	. CIRCUIT BREAKER-AFCS CONT HC025	01
25	S2899L0.5	. CIRCUIT BREAKER-PRIM STAB TRIM PWR HC026	01
26	S3478-1	. CIRCUIT BREAKER BLOCK ASSY-HC027	01
27	S2899L5.0	. CIRCUIT BREAKER-COCKPIT FLOOD LTS HC028	01
28	S2899L5.0	. CIRCUIT BREAKER-CABIN DOOR SYS HC029	01
29	S2899L5.0	. CIRCUIT BREAKER-L AUTO TEMP HC030	01
30	S2899L5.0	. CIRCUIT BREAKER-L CABIN ALT MONITOR HC031	01
31	S2899L5.0	. CIRCUIT BREAKER-HYD A CONT HC032	01
32	S2899L5.0	. CIRCUIT BREAKER-OXYGEN HC033	01
33	S2899L5.0	. CIRCUIT BREAKER-ADC 1 HC034	01
34	700-070-30	. CIRCUIT BREAKER-L ELEC PWR FEED 3 HC035	01
35	700-070-30	. CIRCUIT BREAKER-L ELEC PWR FEED 2 HC036	01
36	700-070-30	. CIRCUIT BREAKER-L ELEC PWR FEED 1 HC037	01

- ITEM NOT ILLUSTRATED

A89487

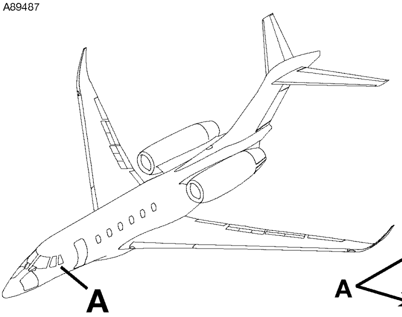

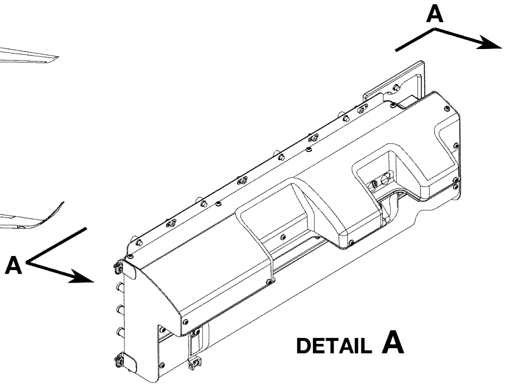

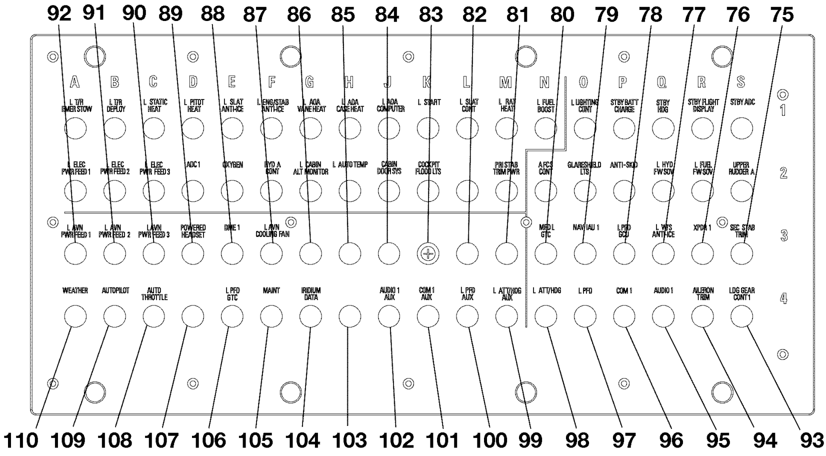

VIEW A–A

6710T1103
6714T1439

CIRCUIT BREAKERS - LEFT HAND PANEL
FIGURE 03 (SHEET 2)

FIG ITEM	PART NUMBER	NOMENCLATURE 1 2 3 4 5 6 7	UNITS PER ASSY
03			
75	S2899L1.0	. CIRCUIT BREAKER-SEC STAB TRIM HC039	01
76	S2899L5.0	. CIRCUIT BREAKER-XPDR 1 HC040	01
77	S2899L5.0	. CIRCUIT BREAKER-L W/S ANTI-ICE HC041	01
78	S2899L3.0	. CIRCUIT BREAKER-L PFD GCU HC042	01
79	S2899L5.0	. CIRCUIT BREAKER-NAV IAU 1 HC043	01
80	S2899L5.0	. CIRCUIT BREAKER-MFD L GTC1 HC044	01
81	CM2692-16Z2S	. PLUG BUTTON-HC045	01
82	CM2692-16Z2S	. PLUG BUTTON-HC046	01
83	S3478-1	. CIRCUIT BREAKER BLOCK ASSY-HC047	01
84	CM2692-16Z2S	. PLUG BUTTON-HC048	01
85	CM2692-16Z2S	. PLUG BUTTON-HC049	01
86	CM2692-16Z2S	. PLUG BUTTON-HC050	01
87	S2899L3.0	. CIRCUIT BREAKER-L AVN COOLING FAN HC051	01
88	S2899L5.0	. CIRCUIT BREAKER-DME 1 HC052	01
89	S2899L0.5	. CIRCUIT BREAKER-POWERED HEADSET HC053	01
90	700-070-30	. CIRCUIT BREAKER-L AVN PWER FEED 3 HC054	01
91	700-070-30	. CIRCUIT BREAKER-L AVN PWER FEED 2 HC055	01
92	700-070-30	. CIRCUIT BREAKER-L AVN PWER FEED 1 HC056	01
93	S2899L5.0	. CIRCUIT BREAKER-LDG GEAR CONT 1 HC057	01
94	S2899L3.0	. CIRCUIT BREAKER-AILERON TRIM HC058	01
95	S2899L5.0	. CIRCUIT BREAKER-AUDIO 1 HC059	01
96	S2899L10.0	. CIRCUIT BREAKER-COM 1 HC060	01
97	S2899L10.0	. CIRCUIT BREAKER-L PFD HC061	01
98	S2899L5.0	. CIRCUIT BREAKER-L ATT/HDG HC062	01
99	S2899L5.0	. CIRCUIT BREAKER-L ATT/HDG AUX HC063	01
100	S2899L10.0	. CIRCUIT BREAKER-L PFD AUX HC064	01
101	S2899L10.0	. CIRCUIT BREAKER-COM 1 AUX HC065	01
102	S2899L5.0	. CIRCUIT BREAKER-AUDIO 1 AUX HC066	01
103	CM2692-16Z2S	. PLUG BUTTON-HC067	01
104	CM2692-16Z2S	. PLUG BUTTON-HC068	01
105	S2899L1.0	. CIRCUIT BREAKER-MAINT HC069	01
106	S2899L5.0	. CIRCUIT BREAKER-L PFD GTC HC070	01
107	CM2692-16Z2S	. PLUG BUTTON-HC071	01
108	S2899L5.0	. CIRCUIT BREAKER-AUTO THROTTLE HC072	01
109	S2899L5.0	. CIRCUIT BREAKER-AUTOPILOT HC073	01
110	S2899L3.0	. CIRCUIT BREAKER-WEATHER HC074	01

- ITEM NOT ILLUSTRATED

A89484

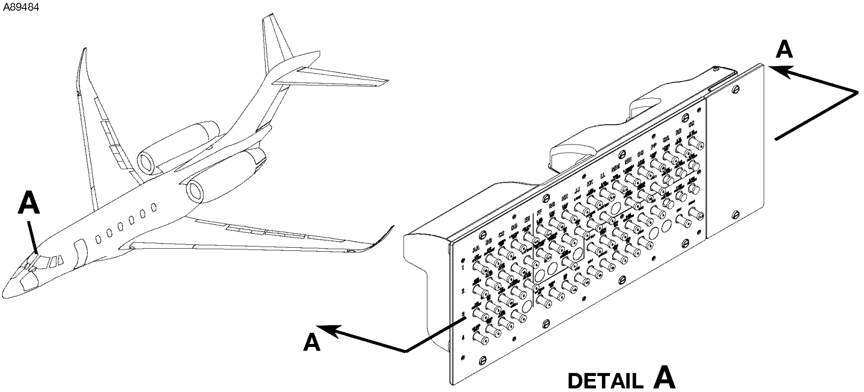

DETAIL A

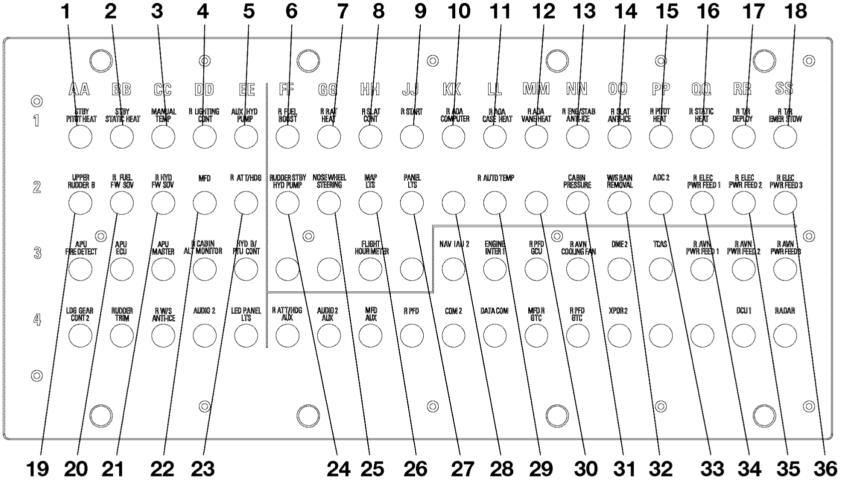

VIEW A–A

6710T1103
A6714T1438
AA6714T1438

CIRCUIT BREAKERS - RIGHT HAND PANEL
FIGURE 04 (SHEET 1)

FIG ITEM	PART NUMBER	NOMENCLATURE 1 2 3 4 5 6 7	UNITS PER ASSY
04			
-		CIRCUIT BREAKERS - RIGHT HAND PANEL	RF
1	S2899L15.0	. CIRCUIT BREAKER-STBY PITOT HEAT HF002	01
2	S2899L5.0	. CIRCUIT BREAKER-STBY STATIC HEAT HF003	01
3	S2899L5.0	. CIRCUIT BREAKER-MANUAL TEMP HF004	01
4	S2899L5.0	. CIRCUIT BREAKER-R LIGHTING CONT HF005	01
5	S2899L0.5	. CIRCUIT BREAKER-AUX HYD PUMP HF006	01
6	S2899L0.5	. CIRCUIT BREAKER-R FUEL BOOST HF007	01
7	S2899L15.0	. CIRCUIT BREAKER-R RAT HEAT HF008	01
8	S2899L5.0	. CIRCUIT BREAKER-R SLAT CONT HF009	01
9	S2899L3.0	. CIRCUIT BREAKER-R START HF010	01
10	S2899L5.0	. CIRCUIT BREAKER-R AOA COMP HF011	01
11	S2899L7.5	. CIRCUIT BREAKER-R AOA CASE HEAT HF012	01
12	S2899L7.5	. CIRCUIT BREAKER-R AOA VANE HEAT HF013	01
13	S2899L5.0	. CIRCUIT BREAKER-R ENG/STAB ANTI-ICE HF014	01
14	S2899L5.0	. CIRCUIT BREAKER-R SLAT ANTI-ICE HF015	01
15	S2899L15.0	. CIRCUIT BREAKER-R PITOT HEAT HF016	01
16	S2899L5.0	. CIRCUIT BREAKER-R STATIC HEAT HF017	01
17	S2899L5.0	. CIRCUIT BREAKER-R T/R DEPLOY HF018	01
18	S2899L5.0	. CIRCUIT BREAKER-R T/R EMER STOW HF019	01
19	S2899L5.0	. CIRCUIT BREAKER-UPPER RUDDER B HF020	01
20	S2899L5.0	. CIRCUIT BREAKER-R FUEL FW SOV HF021	01
21	S2899L5.0	. CIRCUIT BREAKER-R HYD FWD SOV HF022	01
22	S2899L10.0	. CIRCUIT BREAKER-MFD HF023	01
23	S2899L5.0	. CIRCUIT BREAKER-R ATT/HDG HF024	01
24	S2899L0.5	. CIRCUIT BREAKER-RUDDER STBY HYD PUMP HF025	01
25	S2899L5.0	. CIRCUIT BREAKER-NOSE WHEEL STEERING HF026	01
26	S2899L5.0	. CIRCUIT BREAKER-MAP LTS HF027	01
27	S2899L5.0	. CIRCUIT BREAKER-PANEL LTS HF028	01
28	CM2692-16Z2S	. PLUG BUTTON-HF029	01
29	S2899L5.0	. CIRCUIT BREAKER-R AUTO TEMP HF030	01
30	CM2692-16Z2S	. PLUG BUTTON-HF031	01
31	S2899L5.0	. CIRCUIT BREAKER-CABIN PRESSURE HF032	01
32	S2899L15.0	. CIRCUIT BREAKER-W/S RAIN REMOVAL HF033	01
33	S2899L5.0	. CIRCUIT BREAKER-ADC 2 HF034	01
34	700-070-30	. CIRCUIT BREAKER-R ELEC PWR FEED 1 HF035	01
35	700-070-30	. CIRCUIT BREAKER-R ELEC PWR FEED 2 HF036	01
36	700-070-30	. CIRCUIT BREAKER-R ELEC PWR FEED 3 HF037	01

- ITEM NOT ILLUSTRATED

A89485

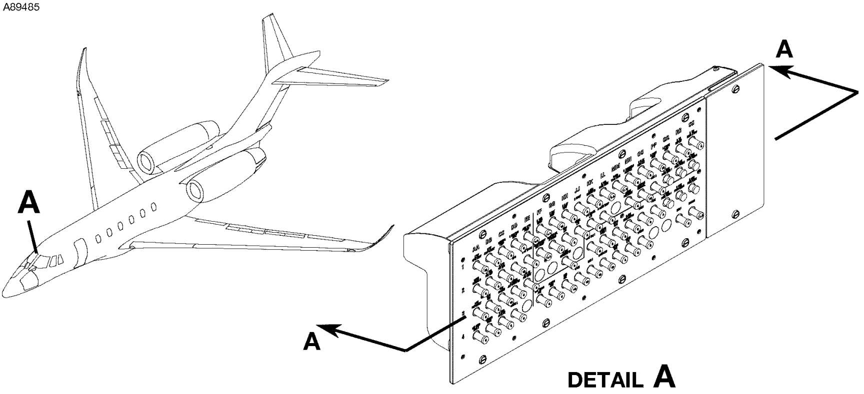

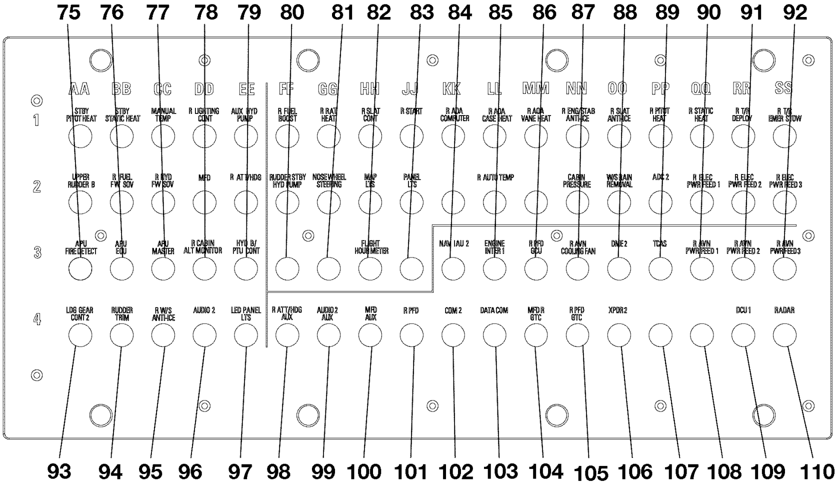

VIEW A–A

6710T1103
A6714T1438
AA6714T1438

CIRCUIT BREAKERS - RIGHT HAND PANEL
FIGURE 04 (SHEET 2)

FIG ITEM	PART NUMBER	NOMENCLATURE 1 2 3 4 5 6 7	UNITS PER ASSY
04			
75	S2899L5.0	. CIRCUIT BREAKER-APU FIRE DETECT HF039	01
76	S2899L10.0	. CIRCUIT BREAKER-APU ECU HF040	01
77	S2899L5.0	. CIRCUIT BREAKER-APU MASTER HF041	01
78	S2899L5.0	. CIRCUIT BREAKER-R CABIN ALT MONITOR HF042	01
79	S2899L5.0	. CIRCUIT BREAKER-HYD B/PTU CONT HF043	01
80	CM2692-16Z2S	. PLUG BUTTON-HF044	01
81	CM2692-16Z2S	. PLUG BUTTON-HF045	01
82	S2899L3.0	. CIRCUIT BREAKER-FLIGHT HOUR METER HF046	01
83	CM2692-16Z2S	. PLUG BUTTON-HF047	01
84	S2899L5.0	. CIRCUIT BREAKER-NAV IAU 2 HF048	01
85	S2899L5.0	. CIRCUIT BREAKER-ENGINE INTER 1 HF049	01
86	S2899L3.0	. CIRCUIT BREAKER-R PFD GCU 1 HF050	01
87	S2899L3.0	. CIRCUIT BREAKER-R AVN COOLING FAN HF051	01
88	S2899L5.0	. CIRCUIT BREAKER-DME 2 HF052	01
89	S2899L5.0	. CIRCUIT BREAKER-TCAS HF053	01
90	700-070-30	. CIRCUIT BREAKER-R AVN PWR FEED 1 HF054	01
91	700-070-30	. CIRCUIT BREAKER-R AVN PWR FEED 2 HF055	01
92	700-070-30	. CIRCUIT BREAKER-R AVN PWR FEED 3 HF056	01
93	S2899L5.0	. CIRCUIT BREAKER-LDG GEAR CONT 2 HF057	01
94	S2899L3.0	. CIRCUIT BREAKER-RUDDER TRIM HF058	01
95	S2899L5.0	. CIRCUIT BREAKER-R W/S ANT-ICE HF059	01
96	S2899L5.0	. CIRCUIT BREAKER-AUDIO 2 HF060	01
97	S2899L5.0	. CIRCUIT BREAKER-LED PANEL LTS HF061	01
98	S2899L5.0	. CIRCUIT BREAKER-R ATT/HDG HF062	01
99	S2899L5.0	. CIRCUIT BREAKER-AUDIO 2 AUX HF063	01
100	S2899L10.0	. CIRCUIT BREAKER-MFD AUX HF064	01
101	S2899L10.0	. CIRCUIT BREAKER-R PFD HF065	01
102	S2899L10.0	. CIRCUIT BREAKER-COM 2 HF066	01
103	S2899L10.0	. CIRCUIT BREAKER-DATA COM HF067	01
104	S2899L5.0	. CIRCUIT BREAKER-MFD R GTC HF068	01
105	S2899L5.0	. CIRCUIT BREAKER-R PFD GTC HF069	01
106	S2899L5.0	. CIRCUIT BREAKER-XPDR 2 HF070	01
107	CM2692-16Z2S	. PLUG BUTTON-HF071	01
108	CM2692-16Z2S	. PLUG BUTTON-HF072	01
109	S2899L5.0	. CIRCUIT BREAKER-DCU 1 HF073	01
110	S2899L7.5	. CIRCUIT BREAKER-RADAR HF074	01

- ITEM NOT ILLUSTRATED

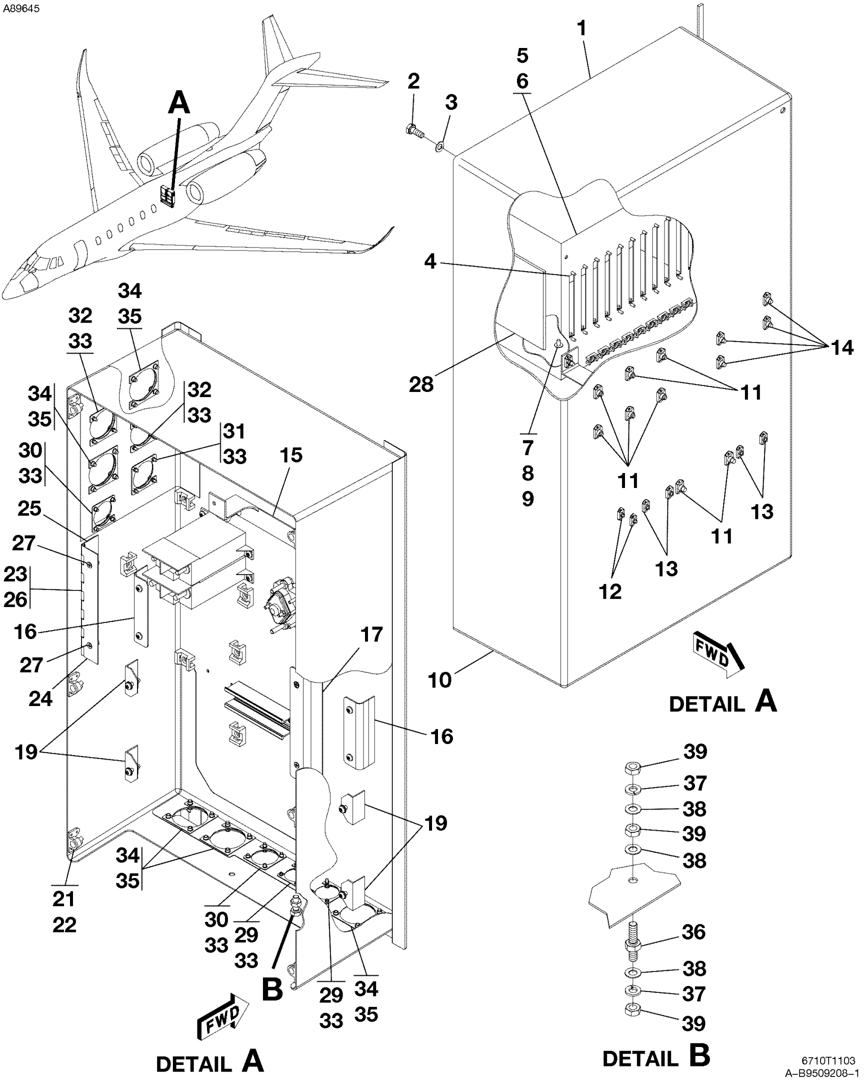

LH POWER JUNCTION BOX
FIGURE 01 (SHEET 1)

FIG ITEM	PART NUMBER	NOMENCLATURE 1 2 3 4 5 6 7		UNITS PER ASSY
01				
-		LH POWER JUNCTION BOX		RF
1	9509209-5	. POWER JUNCTION BOX ASSY-LH		01
		ATTACHING PARTS		
2	AN4-5A	. BOLT		04
3	NAS1149F0432P	. WASHER		04
		—*—		
4		. . AFT LOGIC MODULE REFER TO 24-60-25 FIGURE 01		RF
5	9914581-6	. . ENCLOSURE ASSY		01
		ATTACHING PARTS		
6	MS35206-245	. . SCREW		04
		—*—		
7	MS35206-227	. . SCREW		AR
8	MS35338-41	. . WASHER		AR
9	NAS1149FN616P	. . WASHER		AR
10	9509210-67	. . J-BOX ASSY - LH		01
11	MS21075L3N	. . . NUTPLATE		08
12	MS21075L04N	. . . NUTPLATE		02
13	MS21075L06N	. . . NUTPLATE		04
14	MS21075L08N	. . . NUTPLATE		04
15	6918352-27	. . . SUPPORT ASSY		02
16	6918352-16	. . . CLIP ASSY		02
17	6918352-18	. . . CLIP ASSY		01
- 18	MS21075L08N	. . . . NUTPLATE		02
19	6718432-12	. . . CLIP ASSY		04
- 20	MS21075L08N	. . . . NUTPLATE		01
21	6918352-20	. . . SHIM		01
22	S3275D208	. . . RECEPTACLE		06
23	6918352-29	. . . HINGE ASSY		01
24	6918352-31	. . . . HINGE HALF		01
25	6918352-32	. . . . HINGE HALF		01
26	6918352-30	. . . . HINGE PIN		01
27	NAS1474A08	. . . . NUTPLATE		02
28	5538341-20	. . . BAG ASSY-SPARE FUSES		01 R
- 28A	ANL130	. . . LIMITER-SPARE	V71400	01 R
- 28B	ANL-150	. . . FUSE LIMITER-SPARE	V71400	01 R
- 28C	ANL40	. . . LIMITER-SPARE	V71400	03 R
29	M85528/2-16-A	. . MOUNTING FLANGE		02
30	M85528/2-18-A	. . MOUNTING FLANGE		02
31	M85528/2-20-A	. . MOUNTING FLANGE		01
32	M85528/2-22-A	. . MOUNTING FLANGE		01
		ATTACHING PARTS		
33	MS35206-215	. . SCREW		04
		—*—		
34	M85528/2-24-B	. . MOUNTING FLANGE		05
		ATTACHING PARTS		
35	MS35206-228	. . SCREW		04
		—*—		
36	6918358-2	. . STUD-J-BOX INVERTER XZ101		01
37	MS35338-44	. . WASHER		02
38	NAS1149F0432P	. . WASHER		02
39	MS35650-3255T	. . NUT		02

- ITEM NOT ILLUSTRATED

A89646

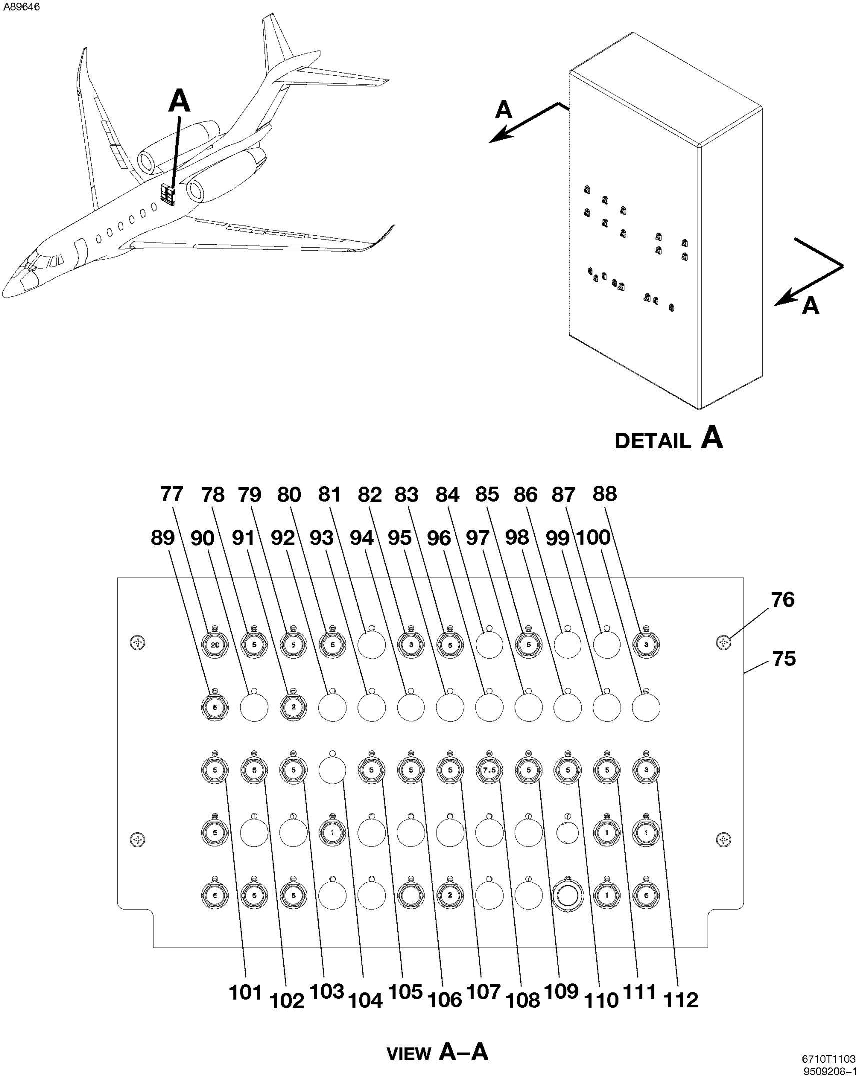

LH POWER JUNCTION BOX
FIGURE 01 (SHEET 2)

FIG ITEM	PART NUMBER	NOMENCLATURE 1 2 3 4 5 6 7	UNITS PER ASSY
01			
75	9509210-41	. . CIRCUIT BREAKER PANEL ASSY-LH	01
		ATTACHING PARTS	
76	MS24693-S49	. . SCREW	04
		—*—	
77	S2899-20.0	. . CIRCUIT BREAKER-L LANDING/REC LTS HZ101	01
78	S2899-5.0	. . CIRCUIT BREAKER-GND REC LT HZ102	01
79	S2899-5.0	. . CIRCUIT BREAKER-PRI STAB TRIM CONT HZ103	01
80	S2899-5.0	. . CIRCUIT BREAKER-ENGINE INTER 2 AUX HZ104	01
81	CM2692-15B1S	. . PLUG BUTTON-HZ105	01
82	S2899-3.0	. . CIRCUIT BREAKER-L FUEL CONT HZ106	01
83	S2899-5.0	. . CIRCUIT BREAKER-FLAP CONT HZ107	01
84	CM2692-15B1S	. . PLUG BUTTON-HZ108	01
85	S2899-5.0	. . CIRCUIT BREAKER-L WARN HZ109	01
86	CM2692-15B1S	. . PLUG BUTTON-HZ110	01
87	CM2692-15B1S	. . PLUG BUTTON-HZ111	01
88	S2899-3.0	. . CIRCUIT BREAKER-DIAGNOSTICS HZ112	01
89	S2899-5.0	. . CIRCUIT BREAKER-L BLEED AIR CONT HZ113	01
90	CM2692-15B1S	. . PLUG BUTTON-HZ114	01
91	S2899-2.0	. . CIRCUIT BREAKER-L AVN SW LTS HZ115	01
92	CM2692-15B1S	. . PLUG BUTTON-HZ116	01
93	CM2692-15B1S	. . PLUG BUTTON-HZ117	01
94	CM2692-15B1S	. . PLUG BUTTON-HZ118	01
95	CM2692-15B1S	. . PLUG BUTTON-HZ119	01
96	CM2692-15B1S	. . PLUG BUTTON-HZ120	01
97	CM2692-15B1S	. . PLUG BUTTON-HZ121	01
98	CM2692-15B1S	. . PLUG BUTTON-HZ122	01
99	CM2692-15B1S	. . PLUG BUTTON-HZ123	01
100	CM2692-15B1S	. . PLUG BUTTON-HZ124	01
101	S2899-5.0	. . CIRCUIT BREAKER-CB MONITOR A PCB HZ125	01
102	S2899-5.0	. . CIRCUIT BREAKER-SEAT BELT HZ126	01
103	S2899-5.0	. . CIRCUIT BREAKER-CB - BAG DR SEAL HZ127	01
104	CM2692-15B1S	. . PLUG BUTTON-HZ128	01
105	S2899-5.0	. . CIRCUIT BREAKER-CVR HZ129	01
106	S2899-5.0	. . CIRCUIT BREAKER-DCU 2 AUX HZ130	01
107	S2899-5.0	. . CIRCUIT BREAKER-WING INSPECT LTS HZ131	01
108	S2899-7.5	. . CIRCUIT BREAKER-ANTI-COLLISION LTS HZ132	01
109	S2899-5.0	. . CIRCUIT BREAKER-L FUEL QUANTITY HZ133	01
110	S2899-5.0	. . CIRCUIT BREAKER-L PCU MONITOR HZ134	01
111	S2899-5.0	. . CIRCUIT BREAKER-ARES A HZ135	01
112	S2899-3.0	. . CIRCUIT BREAKER-L FUEL TRANSFER HZ136	01

- ITEM NOT ILLUSTRATED

A89647

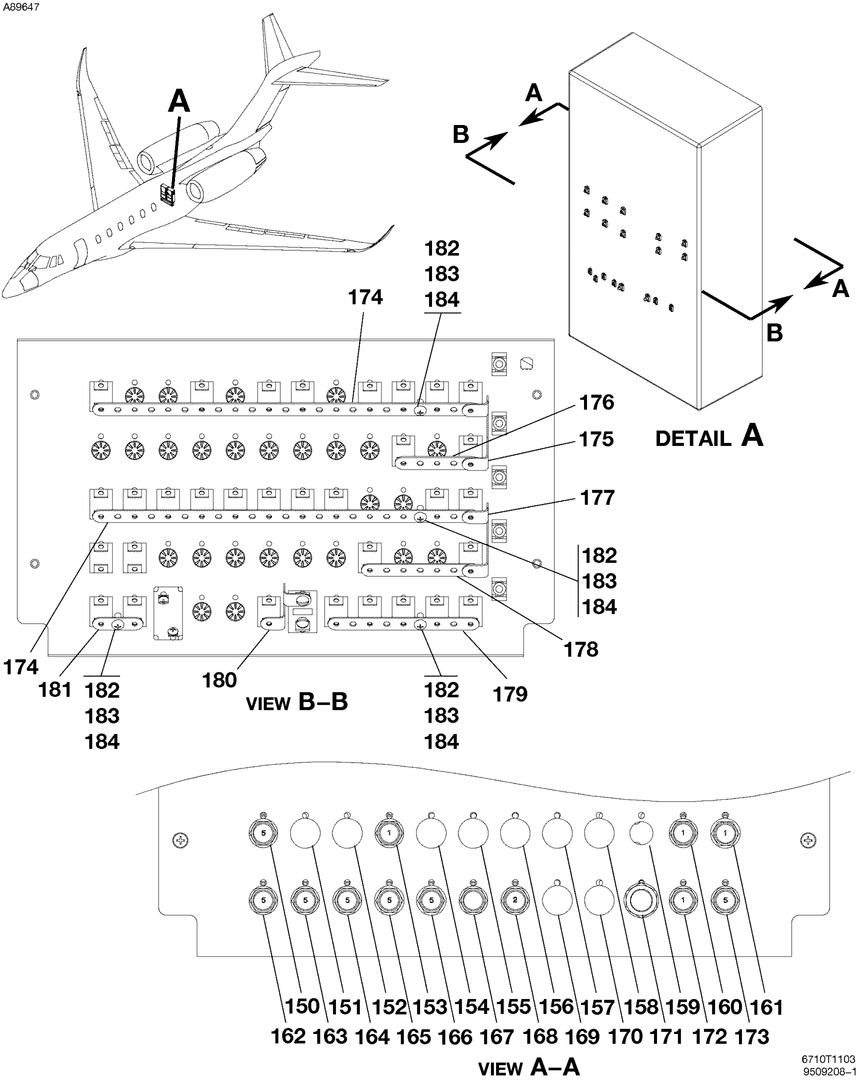

LH POWER JUNCTION BOX
FIGURE 01 (SHEET 3)

FIG ITEM	PART NUMBER	NOMENCLATURE 1 2 3 4 5 6 7		UNITS PER ASSY
01				
150	S2899-5.0	. . CIRCUIT BREAKER-L BLEED MONITOR HZ137		01
151	CM2692-15B1S	. . PLUG BUTTON-HZ138		01
152	CM2692-15B1S	. . PLUG BUTTON-HZ139		01
153	S2899-1.0	. . CIRCUIT BREAKER-L BATT HEATER HZ140		01
154	CM2692-15B1S	. . PLUG BUTTON-HZ141		01
155	CM2692-15B1S	. . PLUG BUTTON-HZ142		01
156	CM2692-15B1S	. . PLUG BUTTON-HZ143		01
157	CM2692-15B1S	. . PLUG BUTTON-HZ144		01
158	CM2692-15B1S	. . PLUG BUTTON-HZ145		01
159	CM2692-15B1S	. . PLUG BUTTON-HZ146		01
160	S2899-1.0	. . CIRCUIT BREAKER-L FUEL BOOST RMT HZ147		01
161	S2899-1.0	. . CIRCUIT BREAKER-L LANDING/REC LTS RMT HZ148		01
162	S2899-5.0	. . CIRCUIT BREAKER-PHONE ROUTER HZ149		01
163	S2899-5.0	. . CIRCUIT BREAKER-RADIO ALTIMETER HZ150		01
164	S2899-5.0	. . CIRCUIT BREAKER-L YAW DAMPER HZ151		01
165	S2899-5.0	. . CIRCUIT BREAKER-SATCOM DATALINK 1 HZ152		01
166	S2899-5.0	. . CIRCUIT BREAKER-SATCOM DATALINK 2 HZ152		01
167	700-024-50	. . CIRCUIT BREAKER-1200VA INVERTER HZ154	V76374	01
168	S2899-2.0	. . CIRCUIT BREAKER-28VDC INVTR RMT ON/OFF HZ155		01
169	CM2692-15B1S	. . PLUG BUTTON-HZ156		01
170	CM2692-15B1S	. . PLUG BUTTON-HZ157		01
171	S3189-35A	. . CIRCUIT BREAKER-L FAIRING HEAT HZ158		01
172	S2899-1.0	. . CIRCUIT BREAKER-L GEN SENSE HZ159		01
173	S2899-5.0	. . CIRCUIT BREAKER-L DISTR GEN HZ160		01
174	S4014-11	. . BUS BAR-BZ053		02
175	S4015-1LL	. . BUS BAR-BZ053		01
176	S4014-2	. . BUS BAR-BZ053		01
177	S4015-1LL	. . BUS BAR-BZ055		01
178	S4014-3	. . BUS BAR-BZ055		01
179	S4014-4	. . BUS BAR-BZ057		01
180	6618127-26	. . BUS BAR VERTICAL-BZ061		01
181	S4014-1	. . BUS BAR-BZ065		01
182	NAS602-6	. . SCREW		04
183	MS21042L08	. . NUT		04
184	NAS1149FN816P	. . WASHER		04

- ITEM NOT ILLUSTRATED

A89648

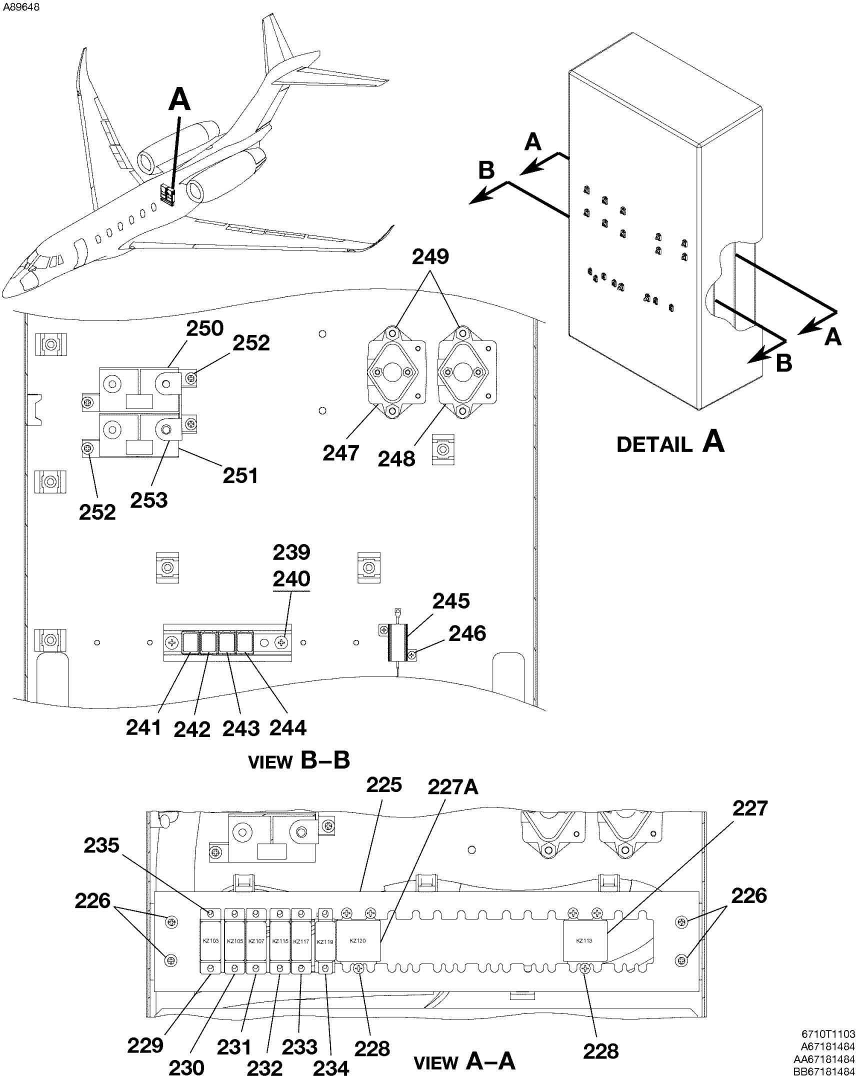

LH POWER JUNCTION BOX
FIGURE 01 (SHEET 4)

FIG ITEM	PART NUMBER	NOMENCLATURE 1 2 3 4 5 6 7		UNITS PER ASSY
01				
225	9509210-72	. . RELAY RACK		01
		ATTACHING PARTS		
226	MS35206-244	. . SCREW		04
		—*—		
227	76883-9000	. . TIME DELAY RELAY-TAILCONE LIGHT KZ113	V2X920	01
227A	76361-20YD	. . TIME DELAY RELAY-EMER BOOST PUMP KZ120	V2X920	01
		ATTACHING PARTS		
228	MS35206-228	. . SCREW		03
		—*—		
229	M83536/9-024	. . RELAY-ANTI-COLLISION LIGHTS KZ103		01
230	M83536/9-024	. . RELAY-GROUND RECOGNITION LIGHTS KZ105		01
231	M83536/9-024	. . RELAY-ANTI-SKID SHUT OFF KZ107		01
232	M83536/9-024	. . RELAY-WING INSPECTION LIGHTS KZ115		01
233	M83536/9-024	. . RELAY-LH BATTERY HEATER ENABLE KZ117		01
234	M6106/19-012	. . RELAY-EMER BOOST PUMP KZ119		01
		ATTACHING PARTS		
235	450040150	. . JRS HARDWARE PACKAGE	V58982	01
		—*—		
- 236	200002200	. . . SCREW		01
- 237	200692250	. . . CONICAL SPRING		01
- 238	200002600	. . . THREADED SPACER		01
239	CTJ-3D-07	. . RAIL	V11139	01
		ATTACHING PARTS		
240	MS35207-263	. . SCREW		02
		—*—		
241	M81714/60-20-01	. . JUNCTION MODULE GZ001		01
242	M81714/60-20-01	. . JUNCTION MODULE GZ003		01
243	M81714/60-20-01	. . JUNCTION MODULE GZ005		01
244	M81714/60-20-01	. . JUNCTION MODULE GZ007		01
245	S3154-25-40	. . RESISTOR-T/R INTERLOCK RK003		01
		ATTACHING PARTS		
246	MS35206-215	. . SCREW		02
		—*—		
247	MS24166-D1	. . RELAY-LH LANDING LIGHT KZ101		01
248	MS24166-D1	. . RELAY-LH FAIRING HEAT KZ111		01
		ATTACHING PARTS		
249	AN3-3A	. . BOLT		02
		—*—		
250	SM600BA25A1	. . CIRCUIT BREAKER-LH FUEL BOOST PUMP RCCB HZ181	V15605	01
251	SM600BA20A1	. . CIRCUIT BREAKER-PRIMARY TRIM RCB HZ179	V15605	01
		ATTACHING PARTS		
252	MS35206-245	. . SCREW		02
		—*—		
253	6718439-33	. . BUS BAR-BZ081		01

- ITEM NOT ILLUSTRATED

A89649

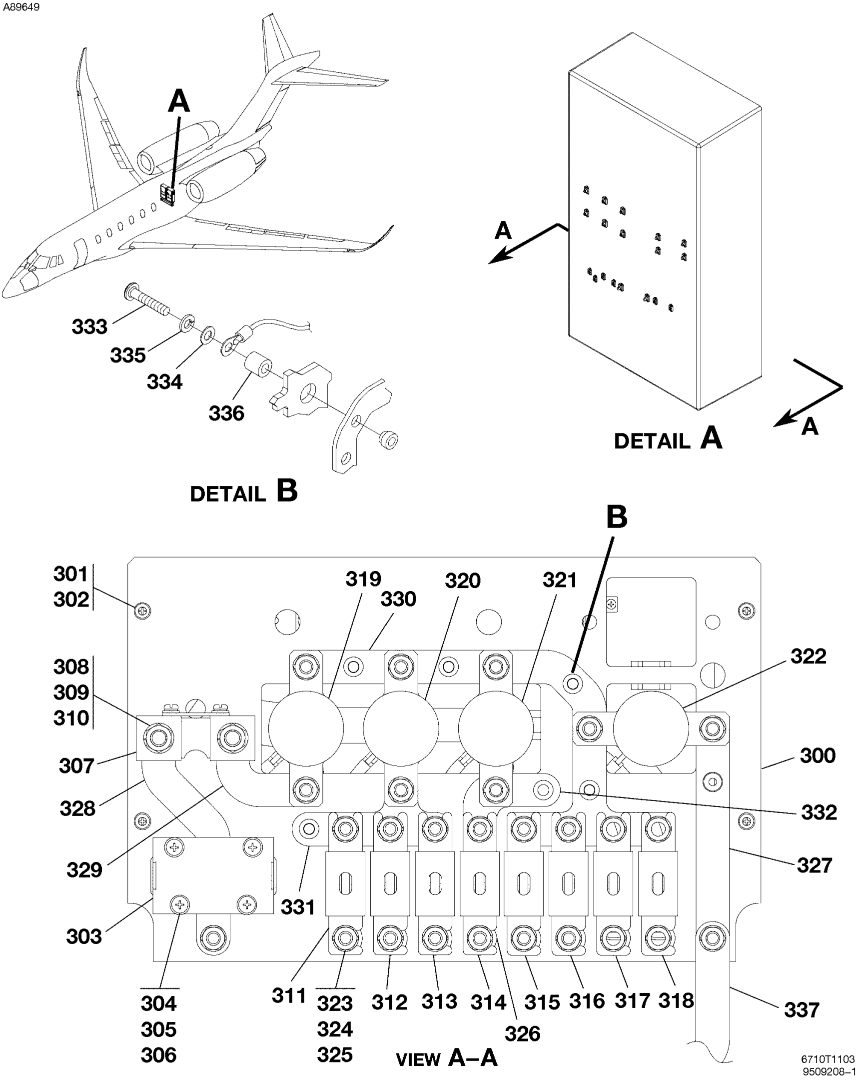

LH POWER JUNCTION BOX
FIGURE 01 (SHEET 5)

FIG ITEM	PART NUMBER	NOMENCLATURE 1 2 3 4 5 6 7		UNITS PER ASSY
01				
300	9509210-13	. . RELAY PANEL ASSY-LH		01
		ATTACHING PARTS		
301	MS35206-246	. . SCREW		04
302	NAS1149FN832P	. . WASHER		04
		—*—		
303	9914752-3	. . GROUND FAULT CURRENT TRANSFORMER-LH GEN LZ001		01
		ATTACHING PARTS		
304	MS35207-263	. . SCREW		04
305	MS35338-43	. . WASHER		04
306	NAS1149F0332P	. . WASHER		04
		—*—		
307	S2609-3	. . SHUNT ASSY-LH GEN RZ901		01
		ATTACHING PARTS		
308	AN315-6R	. . NUT		02
309	MS35338-46	. . WASHER		02
310	NAS1149F0616P	. . WASHER		02
		—*—		
311	ANL40	. . FUSE LIMITER-AVN FEED #1 HZ161	V71400	01
312	ANL40	. . FUSE LIMITER-AVN FEED #2 HZ163	V71400	01
313	ANL40	. . FUSE LIMITER-AVN FEED #3 HZ165	V71400	01
314	ANL130	. . FUSE LIMITER-LH INTERIOR HZ167	V71400	01
315	ANL150	. . FUSE LIMITER-FLAPS HZ169	V71400	01
316	ANL40	. . FUSE LIMITER-ELEC FEED #1 HZ171	V71400	01
317	ANL40	. . FUSE LIMITER-ELEC FEED #2 HZ173	V71400	01
318	ANL40	. . FUSE LIMITER-ELEC FEED #3 HZ175	V71400	01
319	S3602-2	. . CONTACTOR-LH GEN KZ007		01
320	S3602-2	. . CONTACTOR-LH INTERIOR KZ009		01
321	S3602-2	. . CONTACTOR-LH AVN KZ011		01
322	S3602-2	. . CONTACTOR-LH ELEC (ISO) KZ015		01
323	AN315-5R	. . NUT		AR
324	MS35338-45	. . WASHER		AR
325	NAS1149F0516P	. . WASHER		AR
326	S1450-5B12-125	. . WASHER		08
327	9509210-42	. . BUS BAR ASSY-BZ031		01
328	9509210-40	. . BUS BAR-BZ033		01
329	6918354-4	. . BUS BAR-BZ035		01
330	6918354-37	. . BUS BAR ASSY-BZ037		01
331	6918354-41	. . BUS BAR ASSY-BZ039		01
332	6918354-45	. . BUS BAR ASSY-BZ041		01
333	MS35207-284	. . SCREW		AR
334	NAS1149F0432P	. . WASHER		AR
335	MS35338-44	. . WASHER		AR
336	6718434-20	. . SPACER		AR
337	9509210-33	. LH BUS BAR ASSY-BZ031		01

- ITEM NOT ILLUSTRATED

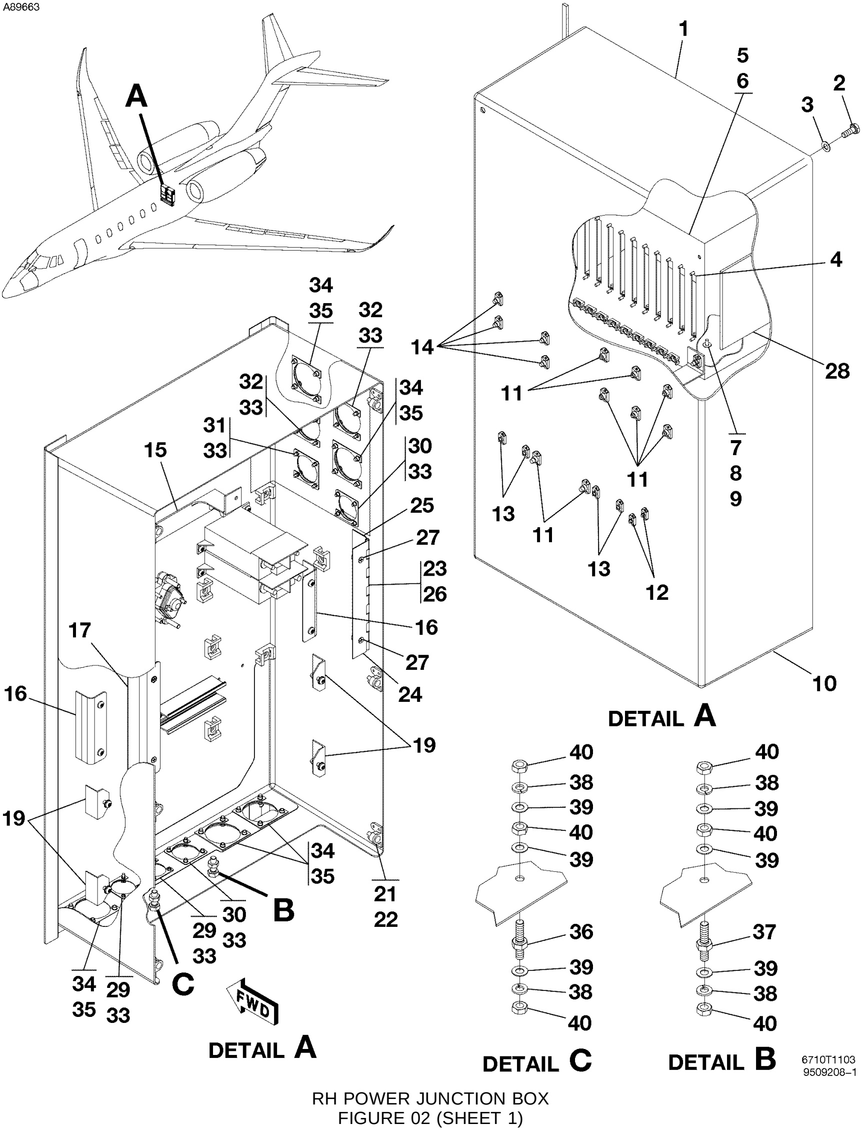

RH POWER JUNCTION BOX
FIGURE 02 (SHEET 1)

FIG ITEM	PART NUMBER	NOMENCLATURE 1 2 3 4 5 6 7		UNITS PER ASSY	
02					
-		RH POWER JUNCTION BOX		RF	
1	9509209-6	. POWER JUNCTION BOX ASSY-RH		01	
		ATTACHING PARTS			
2	AN4-5A	. BOLT		04	
3	NAS1149F0432P	. WASHER		04	
		—*—			
4		. . AFT LOGIC MODULE REFER TO 24-60-25 FIGURE 01		RF	
5	9914581-6	. . ENCLOSURE ASSY		01	
		ATTACHING PARTS			
6	MS35206-245	. . SCREW		04	
		—*—			
7	MS35206-227	. . SCREW		AR	
8	MS35338-41	. . WASHER		AR	
9	NAS1149FN616P	. . WASHER		AR	
10	9509210-68	. . J-BOX ASSY - RH		01	
11	MS21075L3N	. . . NUTPLATE		08	
12	MS21075L04N	. . . NUTPLATE		02	
13	MS21075L06N	. . . NUTPLATE		04	
14	MS21075L08N	. . . NUTPLATE		04	
15	6918352-27	. . . SUPPORT ASSY		02	
16	6918352-16	. . . CLIP ASSY		02	
17	6918352-18	. . . CLIP ASSY		01	
- 18	MS21075L08N	. . . . NUTPLATE		02	
19	6718432-12	. . . CLIP ASSY		04	
- 20	MS21075L08N	. . . . NUTPLATE		01	
21	6918352-20	. . . SHIM		01	
22	S3275D208	. . . RECEPTACLE		06	
23	6918352-29	. . . HINGE ASSY		01	
24	6918352-31	. . . . HINGE HALF		01	
25	6918352-32	. . . . HINGE HALF		01	
26	6918352-30	. . . . HINGE PIN		01	
27	NAS1474A08	. . . . NUTPLATE		02	
28	5538341-20	. . . BAG ASSY-SPARE FUSES		01	R
- 28A	ANL130	. . . LIMITER-SPARE	V71400	01	R
- 28B	ANL60	. . . FUSE LIMITER-SPARE	V71400	01	R
- 28C	ANL40	. . . LIMITER-SPARE	V71400	03	R
29	M85528/2-16-A	. . MOUNTING FLANGE		02	
30	M85528/2-18-A	. . MOUNTING FLANGE		02	
31	M85528/2-20-A	. . MOUNTING FLANGE		01	
32	M85528/2-22-A	. . MOUNTING FLANGE		02	
		ATTACHING PARTS			
33	MS35206-215	. . SCREW		04	
		—*—			
34	M85528/2-24-B	. . MOUNTING FLANGE		05	
		ATTACHING PARTS			
35	MS35206-228	. . SCREW		04	
		—*—			
36	6918358-2	. . STUD-J-BOX HF 2 XZ202		01	
37	6918358-2	. . STUD-J-BOX RUDDER STBY PUMP XZ204		01	
38	MS35338-44	. . WASHER		02	
39	NAS1149F0432P	. . WASHER		02	
40	MS35650-3255T	. . NUT		02	

- ITEM NOT ILLUSTRATED

A89664

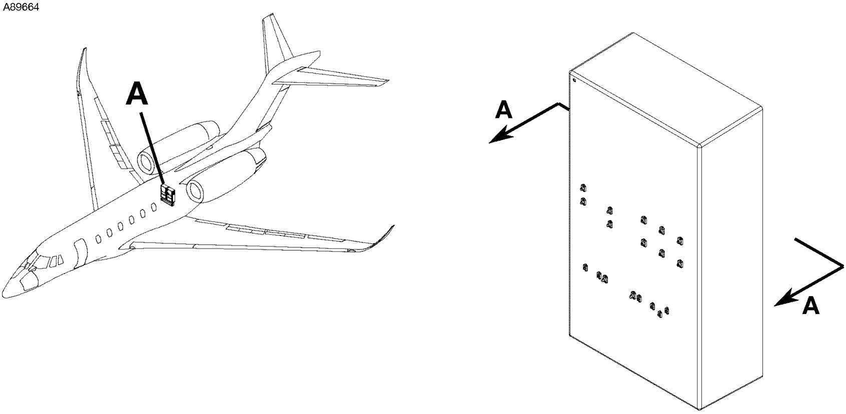

DETAIL A

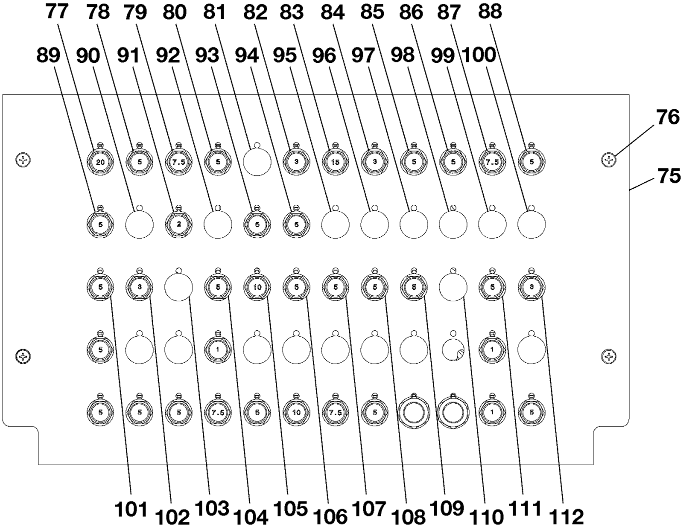

VIEW A–A

6710T1103
A6714T1486
AA6714T1486

RH POWER JUNCTION BOX
FIGURE 02 (SHEET 2)

FIG ITEM	PART NUMBER	NOMENCLATURE 1 2 3 4 5 6 7	UNITS PER ASSY
02			
75	9509210-14	. . CIRCUIT BREAKER PANEL ASSY-RH	01
		ATTACHING PARTS	
76	MS24693-S49	. . SCREW	04
		—*—	
77	S2899-20.0	. . CIRCUIT BREAKER-R LANDING/REC LTS HZ201	01
78	S2899-5.0	. . CIRCUIT BREAKER-PULSE LTS HZ202	01
79	S2899-5.0	. . CIRCUIT BREAKER-NAV LTS HZ203	01
80	S2899-5.0	. . CIRCUIT BREAKER-ENGINE INTER 3 AUX HZ204	01
81	CM2692-15B1S	. . PLUG BUTTON-HZ205	01
82	S2899-3.0	. . CIRCUIT BREAKER-R FUEL CONT HZ206	01
83	S2899-15.0	. . CIRCUIT BREAKER-BAGGAGE FAN HZ207	01
84	S2899-3.0	. . CIRCUIT BREAKER-ELT HZ208	01
85	S2899-5.0	. . CIRCUIT BREAKER-R WARN HZ209	01
86	S2899-5.0	. . CIRCUIT BREAKER-CENTER FUEL QUANTITY HZ210	01
87	S2899-7.5	. . CIRCUIT BREAKER-STANDBY BUS FEED HZ211	01
88	S2899-5.0	. . CIRCUIT BREAKER-BAG SMOKE DETECT HZ212	01
89	S2899-5.0	. . CIRCUIT BREAKER-R BLEED AIR CONT HZ213	01
90	CM2692-15B1S	. . PLUG BUTTON-HZ214	01
91	S2899-2.0	. . CIRCUIT BREAKER-R AVN SW LTS HZ215	01
92	CM2692-15B1S	. . PLUG BUTTON-HZ216	01
93	S2899-5.0	. . CIRCUIT BREAKER-QAR HZ217	01
94	S2899-5.0	. . CIRCUIT BREAKER-FDR HZ218	01
95	CM2692-15B1S	. . PLUG BUTTON-HZ219	01
96	CM2692-15B1S	. . PLUG BUTTON-HZ220	01
97	CM2692-15B1S	. . PLUG BUTTON-HZ221	01
98	CM2692-15B1S	. . PLUG BUTTON-HZ222	01
99	CM2692-15B1S	. . PLUG BUTTON-HZ223	01
100	CM2692-15B1S	. . PLUG BUTTON-HZ224	01
101	S2899-5.0	. . CIRCUIT BREAKER-CB MONITOR B PCB HZ225	01
102	S2899-3.0	. . CIRCUIT BREAKER–BAG DR VALVE HEAT HZ226	01
103	CM2692-15B1S	. . PLUG BUTTON-HZ227	01
104	S2899-5.0	. . CIRCUIT BREAKER-DOWNWASH LYS HZ228	01
105	S2899-10.0	. . CIRCUIT BREAKER-TAXI LTS HZ229	01
106	S2899-5.0	. . CIRCUIT BREAKER-DCU 3 AUX HZ230	01
107	S2899-5.0	. . CIRCUIT BREAKER-TAIL FLOOD LTS HZ231	01
108	S2899-5.0	. . CIRCUIT BREAKER-R PCU MONITOR HZ232	01
109	S2899-5.0	. . CIRCUIT BREAKER-R FUEL QUANTITY HZ233	01
110	CM2692-15B1S	. . PLUG BUTTON-HZ234	01
111	S2899-5.0	. . CIRCUIT BREAKER-ARES B HZ235	01
112	S2899-3.0	. . CIRCUIT BREAKER-R FUEL TRANSFER HZ236	01

- ITEM NOT ILLUSTRATED

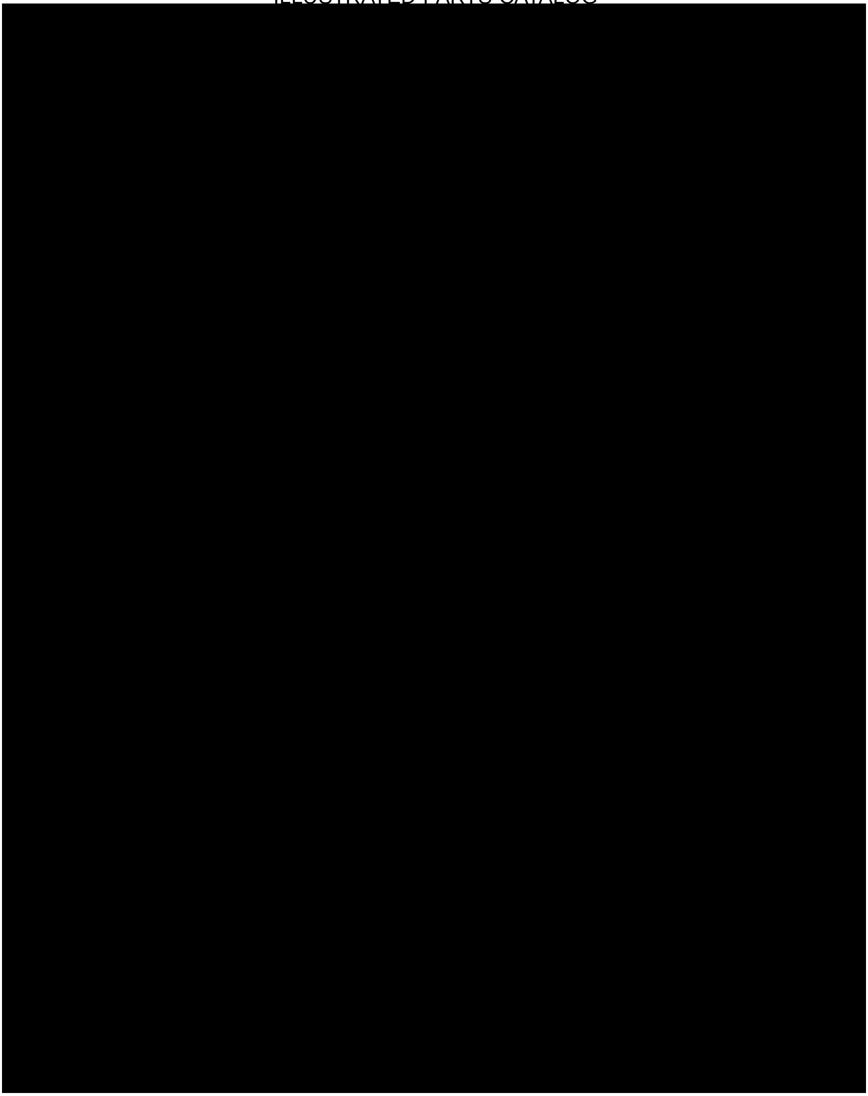

RH POWER JUNCTION BOX
FIGURE 02 (SHEET 3)

CHAPTER 33

LIGHTS

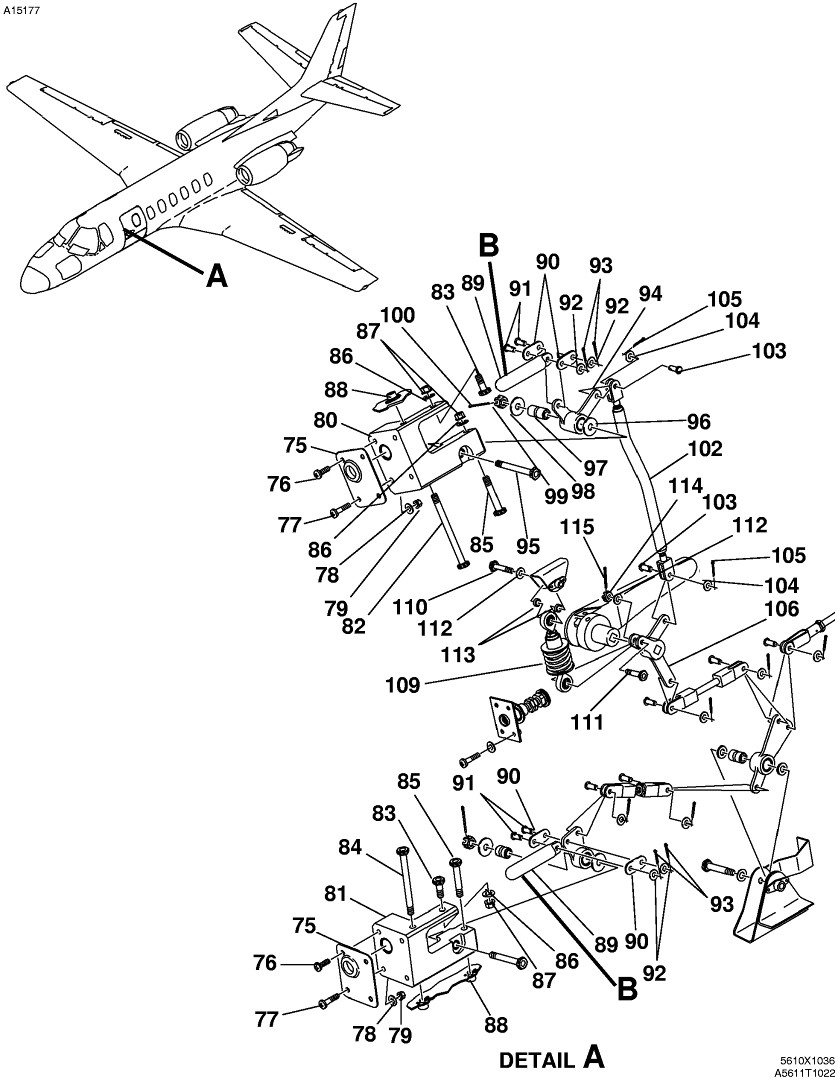

WIDE CABIN DOOR LATCH MECHANISM - UPPER
FIGURE 03 (SHEET 2)

FIG ITEM	PART NUMBER	NOMENCLATURE 1 2 3 4 5 6 7			UNITS PER ASSY
03					
75	6511306-17	. SUPPORT BLOCK BACK PLATE-FORWARD AND AFT			02
76	MS27039-1-09	. SCREW			02
77	MS27039-1-13	. SCREW			01
78	NAS1149F0332P	. WASHER			01
79	MS21042L3	. NUT			01
80	6511306-1	. SUPPORT BLOCK ASSY-UPPER FORWARD			01
81	6511306-5	. SUPPORT BLOCK ASSY-LOWER FORWARD			01
82	NAS6204-44	. BOLT			01
83	NAS6204-5	. BOLT			01
84	NAS6204-40	. BOLT-LOWER FORWARD AND AFT			01
85	NAS6204-18	. BOLT			01
86	NAS1149F0432P	. WASHER			01
87	MS21042L4	. NUT			01
88	MS21069L4	. NUTPLATE			01
89	6511306-19	. DOOR PIN			02
90	6511305-24	. LINK			04
91	MS20392-2C9	. PIN	0280	0386	04
92	NAS1149F0332P	. WASHER	0280	0386	04
93	MS24665-132	. COTTER PIN	0280	0386	04
94	6511309-11	. BELLCRANK ASSY-UPPER FORWARD			01
		ATTACHING PARTS			
95	NAS6204-29D	. BOLT			01
96	S1450-4H12-063L	. WASHER			01
97	NAS72-4-015	. BUSHING			01
98	S1450-4H12-063L	. WASHER			01
99	MS21225-4	. NUT			01
100	MS24665-136	. COTTER PIN			01
		—*—			
- 101	M81934/1-07C028	. . BEARING			01
102	6511305-55	. PUSHROD ASSY-FORWARD-FSO 6511305-99	0280	0464	NP
- 102A	6511305-99	. PUSHROD ASSY-FORWARD	0465	& ON	01
		ATTACHING PARTS			
103	MS20392-2C11	. PIN			02
104	NAS1149F0332P	. WASHER			02
105	MS24665-132	. COTTER PIN			02
		—*—			
106	6511309-15	. BELLCRANK ASSY-FORWARD			01
- 107	MS20392-1C25	. PIN			01
- 108	MS24665-132	. COTTER PIN			01
109	6511305-74	. SPRING ASSY			01
		ATTACHING PARTS			
110	NAS6203-11H	. BOLT-UPPER			01
111	NAS6203-9D	. BOLT-LOWER			01
112	NAS1149F0332P	. WASHER			02
113	NAS43DD3-7N	. SPACER			01
114	MS17826-3	. NUT-LOWER			01
115	MS24665-134	. COTTER PIN-LOWER			01
		—*—			

- ITEM NOT ILLUSTRATED

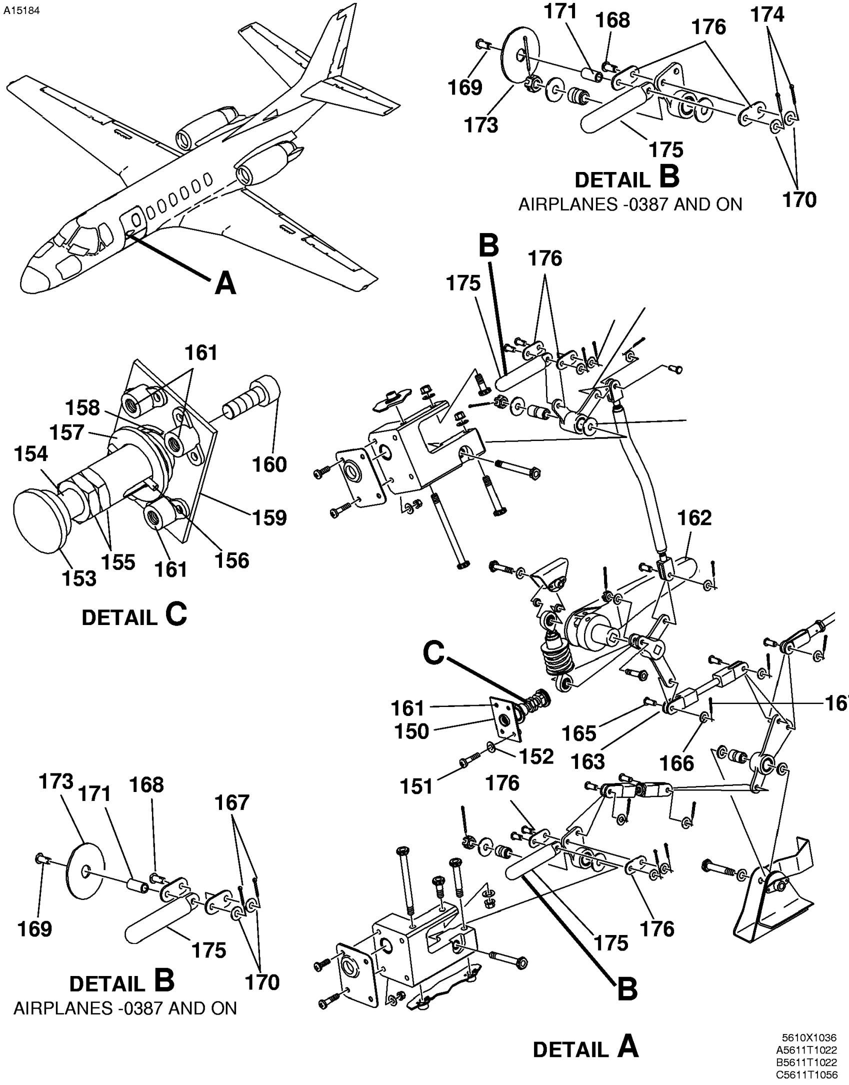

WIDE CABIN DOOR LATCH MECHANISM - UPPER
FIGURE 03 (SHEET 3)

FIG ITEM	PART NUMBER	NOMENCLATURE 1 2 3 4 5 6 7			UNITS PER ASSY
03					
150	6511305-15	. VALVE PLUNGER ASSY			01
		ATTACHING PARTS			
151	MS27039-0809	. SCREW			04
152	NAS1149FN832P	. WASHER			04
		—*—			
153	6511305-20	. . PLUNGER TARGET ASSY TARGET			01
154	6511305-16	. . PLUNGER			01
155	AN316-5R	. . NUT			02
156	MS16562-28	. . PIN			01
157	NAS1149F0863P	. . WASHER			01
158	MS24585-1423	. . SPRING			01
159	6511305-17	. . TARGET GUIDE ASSY			01
160	NAS1351C3LE7	. . SCREW			01
161	MS21069L08	. . NUTPLATE			04
162		. HANDLE REFER TO 52-10-05 FIGURE 06			RF
163	6511305-40	. PUSHROD ASSY-FSO 6511305-97	0280	0464	NP
- 164	6511305-97	. PUSHROD ASSY-FSO 6511305-97	0465	& ON	01
165	MS20392-2C11	. PIN			02
166	NAS1149F0332P	. WASHER			02
167	MS24665-132	. COTTER PIN			02
168	MS20392-2C9	. PIN	0387	& ON	02
169	MS20392-2C33	. PIN	0387	& ON	02
170	NAS1149F0432P	. WASHER	0387	& ON	04
171	NAS43DD3-42FC	. SPACER	0387	& ON	02
- 172	NAS43DD3-42N	. SPACER ALT FOR NAS43DD3-42FC	0387	& ON	02
173	AN970-3	. WASHER	0387	& ON	02
174	MS24665-132	. COTTER PIN	0387	& ON	04
175		. DOOR PIN-REFER TO 52-10-05 FIGURE 03			RF
176		. LINK-REFER TO 52-10-05 FIGURE 03			RF

- ITEM NOT ILLUSTRATED

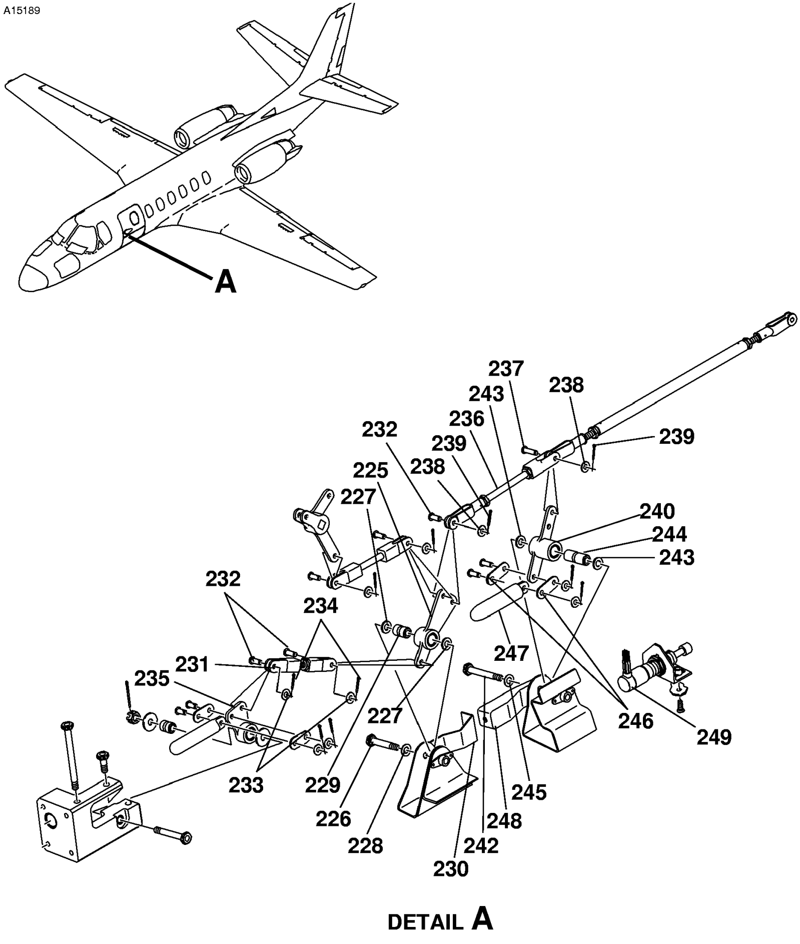

WIDE CABIN DOOR LATCH MECHANISM - UPPER
FIGURE 03 (SHEET 4)

FIG ITEM	PART NUMBER	NOMENCLATURE 1 2 3 4 5 6 7			UNITS PER ASSY
03					
225	6511309-3	. BELLCRANK ASSY-LOWER FORWARD			01
		ATTACHING PARTS			
226	NAS6204-11H	. BOLT			01
227	S2423-3	. WASHER			02
228	NAS1149F0432P	. WASHER			01
229	NAS72-4-011	. BUSHING			01
		—*—			
230	6511305-83	. SUPPORT BRACKET ASSY			01
231	6511305-42	. PUSHROD ASSY			01
		ATTACHING PARTS			
232	MS20392-2C11	. PIN			01
233	NAS1149F0332P	. WASHER			01
234	MS24665-132	. COTTER PIN			01
		—*—			
235	6511309-1	. BELLCRANK ASSY-LOWER FORWARD			01
236	6511305-44	. PUSHROD ASSY			01
		ATTACHING PARTS			
237	MS20392-2C17	. PIN			02
238	NAS1149F0332P	. WASHER			02
239	MS24665-132	. COTTER PIN			02
		—*—			
240	6511309-5	. BELLCRANK ASSY	0250	0250	01
			0280	0464	
- 241	6511309-5	. BELLCRANK ASSY	0465	& ON	02
		ATTACHING PARTS			
242	NAS6204-18H	. BOLT			01
243	S2423-3	. WASHER			02
244	NAS72-4-103	. BUSHING			01
245	NAS1149F0432P	. WASHER			02
		—*—			
246	6511305-25	. LINK-PIN			02
247	6511306-20	. DOOR PIN			01
248	6511305-80	. SUPPORT BRACKET ASSY			02
249	402EN505-1	. SWITCH-WIDE CABIN DOOR SC006 V91929			01

- ITEM NOT ILLUSTRATED

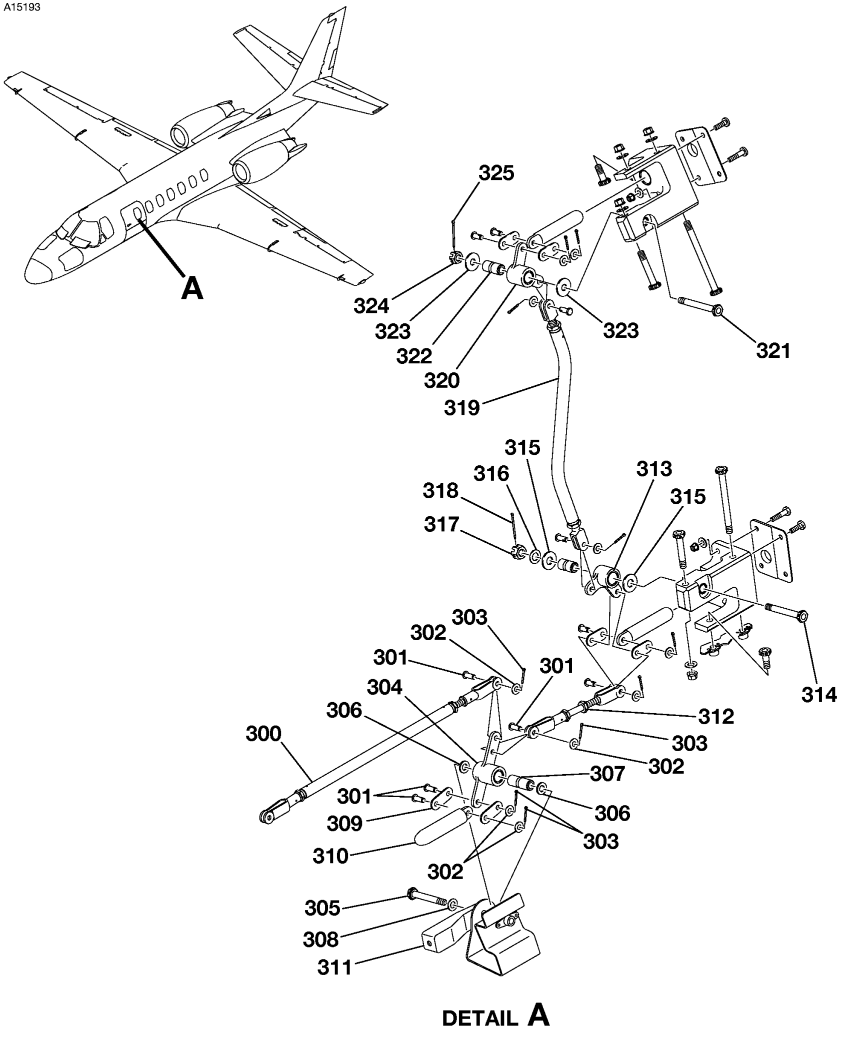

WIDE CABIN DOOR LATCH MECHANISM - UPPER
FIGURE 03 (SHEET 5)

FIG ITEM	PART NUMBER	NOMENCLATURE 1 2 3 4 5 6 7	UNITS PER ASSY
03			
300	6511305-46	. PUSHROD ASSY	01
		ATTACHING PARTS	
301	MS20392-2C11	. PIN	04
302	NAS1149F0332P	. WASHER	04
303	MS24665-132	. COTTER PIN	04
		—*—	
304	6511309-5	. BELLCRANK ASSY	01
		ATTACHING PARTS	
305	NAS6204-18H	. BOLT	01
306	S2423-3	. WASHER	02
307	NAS72-4-103	. BUSHING	01
308	NAS1149F0432P	. WASHER	02
		—*—	
309	6511305-25	. LINK-PIN	02
310	6511306-20	. DOOR PIN	01
311	6511305-80	. SUPPORT BRACKET ASSY	02
312	6511305-50	. PUSHROD ASSY-LOWER AFT	01
313	6511309-7	. BELLCRANK ASSY-LOWER AFT	01
		ATTACHING PARTS	
314	NAS6204-27D	. BOLT	01
315	S1450-5H12-063L	. WASHER	02
316	S1450-5H9-032	. WASHER	01
317	MS21225-5	. NUT	01
318	MS24665-136	. COTTER PIN	01
		—*—	
319	6511305-52	. PUSHROD ASSY-AFT	01
320	6511309-9	. BELLCRANK ASSY-UPPER AFT	01
		ATTACHING PARTS	
321	NAS6204-29	. BOLT	01
322	S1450-5H12-063L	. WASHER	03
323	NAS72-4-015	. BUSHING	01
324	MS21225-4	. NUT	01
325	MS24665-136	. COTTER PIN	01
		—*—	

- ITEM NOT ILLUSTRATED

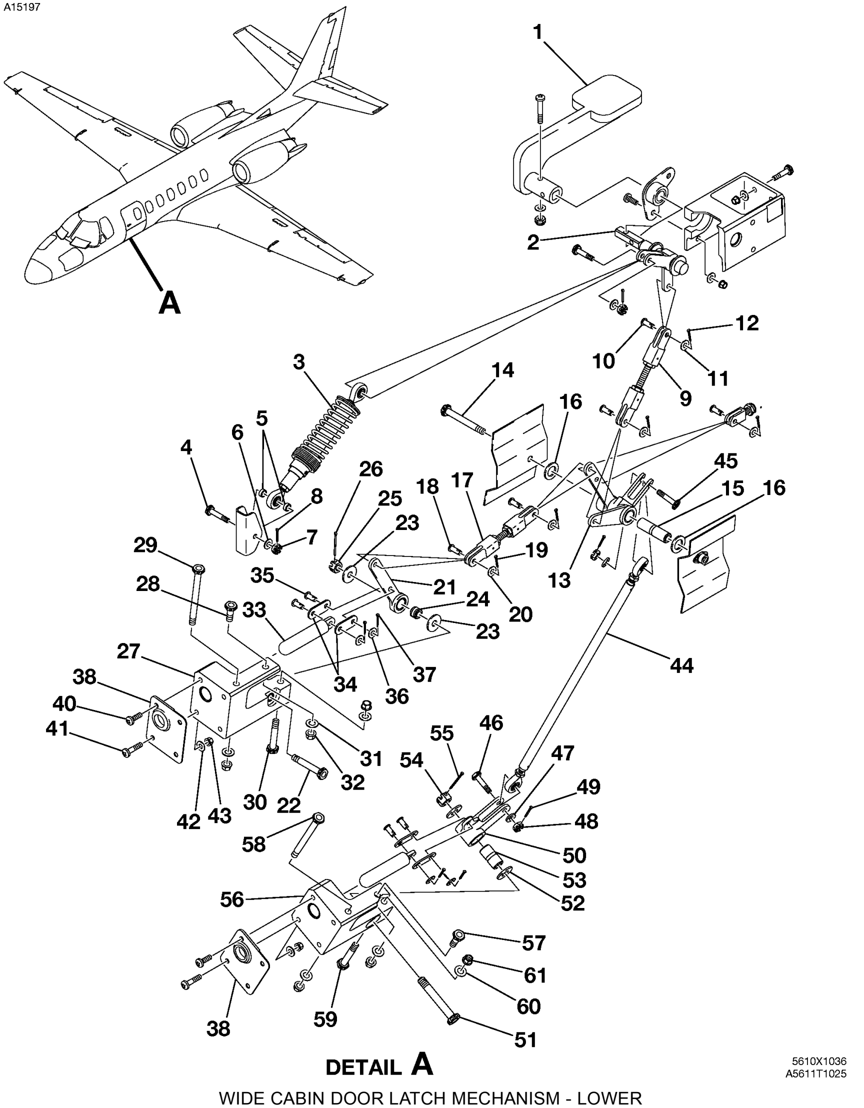

WIDE CABIN DOOR LATCH MECHANISM - LOWER
FIGURE 04 (SHEET 1)

FIG ITEM	PART NUMBER	NOMENCLATURE 1 2 3 4 5 6 7			UNITS PER ASSY
04					
-		WIDE CABIN DOOR LATCH MECHANISM - LOWER REFER TO NOTE 1	0250 0280	0250 & ON	RF
1		. HANDLE ASSY-DOOR REFER TO FIGURE 06			RF
2	6511309-18	. BELLCRANK-UPPER FORWRARD			01
3	6511305-4	. SPRING ASSY			01
4	NAS6203-11H	. BOLT			02
5	NAS43DD3-8N	. SPACER			04
6	NAS1149F0332P	. WASHER			02
7	MS17826-3	. NUT			02
8	MS24665-132	. COTTER PIN			02
9	6511305-67	. PUSH ROD ASSY-UPPER FORWARD			01
10	MS20392-2C11	. PIN			02
11	NAS1149F0332P	. WASHER			02
12	MS24665-132	. COTTER PIN			02
13	6511309-19	. BELLCRANK ASSY-UPPER FORWRARD			01
14	NAS6204-28H	. BOLT			01
15	NAS72-4-109	. BUSHING			01
16	S1450-4H12-063L	. WASHER			02
17	6511305-65	. PUSH ROD ASSY-UPPER FORWARD			01
18	MS20392-2C11	. PIN			02
19	NAS1149F0332P	. WASHER			02
20	MS24665-132	. COTTER PIN			02
21	6511309-16	. BELLCRANK ASSY-UPPER FORWRARD			01
22	NAS6204-20D	. BOLT			01
23	S1450-4H12-063L	. WASHER			02
24	NAS72-4-005	. BUSHING			01
25	MS21225-4	. NUT			01
26	MS24665-136	. COTTER PIN			01
27	6511306-9	. SUPPORT BLOCK ASSY-UPPER FORWARD			01
28	NAS6204-5	. BOLT			01
29	NAS6204-40	. BOLT			01
30	NAS6204-18	. BOLT			01
31	NAS1149F0332P	. WASHER			01
32	MS21042L4	. NUT			01
33	6511306-19	. DOOR PIN			04
34	6511305-25	. LINK-DOOR PIN			08
35	MS20392-2C9	. PIN			08
36	NAS1149F0332P	. WASHER			08
37	MS24665-132	. COTTER PIN			08
38	6511306-17	. SUPPORT BLOCK BACK PLATE-FORWARD			02
- 39		. DELETED NOT USED			RF
40	MS27039-1-09	. SCREW			03
41	MS27039-1-13	. SCREW			01
42	NAS1149F0363P	. WASHER			01
43	MS21042L3	. NUT			01
44	6511305-62	. PUSH ROD ASSY-FORWARD			01
45	NAS6203-8D	. BOLT-UPPER			01
46	NAS6203-9D	. BOLT-LOWER			01
47	NAS1149F0363P	. WASHER			02
48	MS17826-3	. NUT			01
49	MS24665-132	. COTTER PIN			01
50	6511309-25	. BELLCRANK ASSY-LOWER FORWARD			01
51	NAS6205-27D	. BOLT			01
52	S1450-5H12-063L	. WASHER			02
53	NAS72-5-015	. BUSHING			01
54	MS21225-5	. NUT			01
55	MS24665-136	. COTTER PIN			01
56	6511306-13	. SUPPORT BLOCK ASSY-LOWER FORWARD			01
57	NAS6204-5	. BOLT			01
58	NAS6204-40	. BOLT			01
59	NAS6204-18	. BOLT			01
60	NAS1149F0332P	. WASHER			03
61	MS21042L4	. NUT			03

NOTE 1—AIRPLANES -0250 AND -0280 AND ON AND AIRPLANES -0001 THRU -0538 INCORPORATING SB560-52-04. R

- ITEM NOT ILLUSTRATED

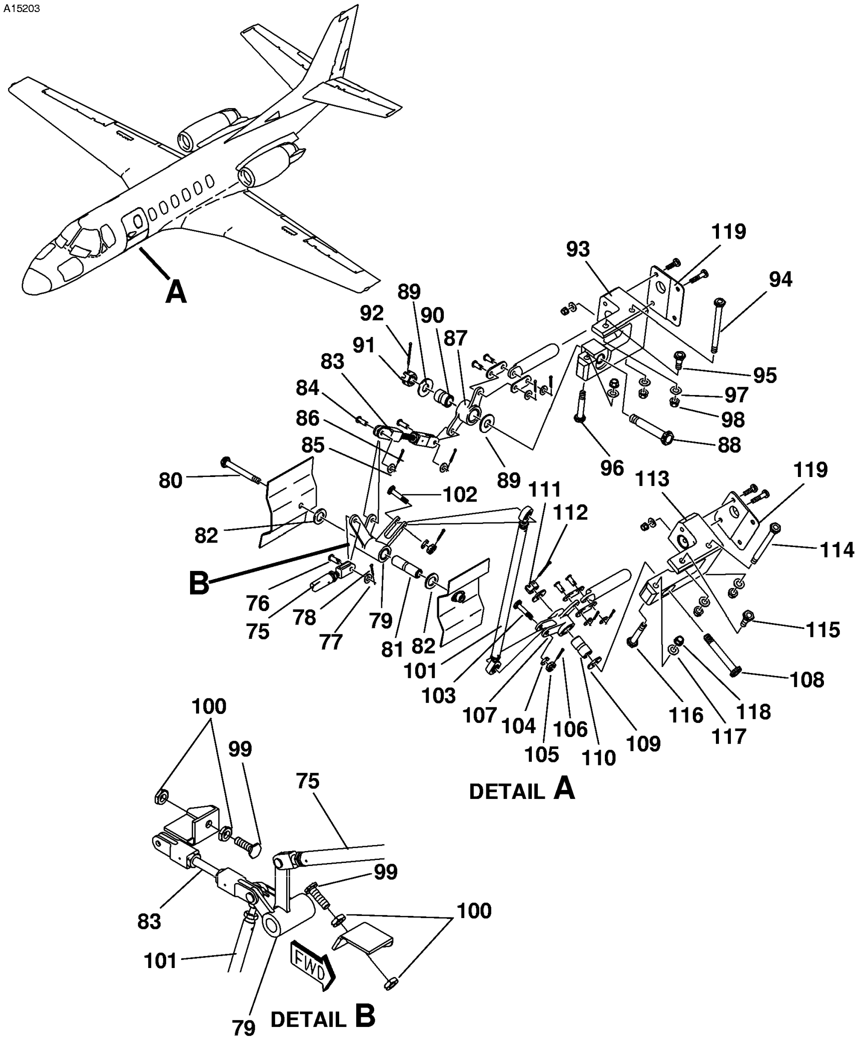

WIDE CABIN DOOR LATCH MECHANISM - LOWER
FIGURE 04 (SHEET 2)

FIG ITEM	PART NUMBER	NOMENCLATURE 1 2 3 4 5 6 7			UNITS PER ASSY
04					
75	6511305-37	. PUSHROD ASSY			01
76	MS20392-2C11	. PIN			01
77	NAS1149F0332P	. WASHER			01
78	MS24665-132	. PIN-COTTER			01
79	6511309-23	. BELLCRANK-UPPER AFT			01
80	NAS6204-28H	. BOLT			01
81	NAS72-4-109	. BUSHING			01
82	S2423-5	. WASHER			02
83	6511305-60	. PUSHROD ASSY-UPPER AFT			01
84	MS20392-2C11	. PIN			02
85	NAS1149F0332P	. WASHER			02
86	MS24665-132	. PIN-COTTER			02
87	6511309-21	. BELLCRANK-UPPER AFT	0250 0280	0250 0451	01
- 87A	6511309-28	. BELLCRANK-UPPER AFT	0452	& ON	01
88	NAS6206-28D	. BOLT			01
89	S1450-6H14-063L	. WASHER			02
90	NAS72-6-012	. BUSHING			01
91	MS21225-6	. NUT			01
92	MS24665-136	. PIN-COTTER			01
93	6511306-10	. BLOCK ASSY-SUPPORT UPPER AFT			01
94	NAS6204-40	. BOLT			01
95	NAS6204-5	. BOLT			01
96	NAS6204-18	. BOLT			01
97	NAS1149F0332P	. WASHER			03
98	MS21042L4	. NUT			03
99	NAS428-4A6	. BOLT			02
100	AN316-4R	. JAM NUT			04
101	6511305-58	. PUSHROD ASSY-AFT			01
102	NAS6203-8D	. BOLT-UPPER			01
103	NAS6203-9D	. BOLT-LOWER			01
104	NAS1149F0332P	. WASHER			02
105	MS17826-3	. NUT			02
106	MS24665-132	. PIN-COTTER			02
107	6511309-13	. BELLCRANK-LOWER AFT			01
108	NAS6206-27D	. BOLT			01
109	S1450-5H24-063L	. WASHER			02
110	NAS72-5-015	. BUSHING			01
111	MS21225-5	. NUT			01
112	MS24665-136	. PIN-COTTER			01
113	6511306-14	. BLOCK ASSY-SUPPORT LOWER AFT			01
114	NAS6204-40	. BOLT			01
115	NAS6204-5	. BOLT			01
116	NAS6204-18	. BOLT			01
117	NAS1149F0332P	. WASHER			03
118	MS21042L4	. NUT			03
119	6511306-18	. PLATE-BACK AFT			01

- ITEM NOT ILLUSTRATED

A15169

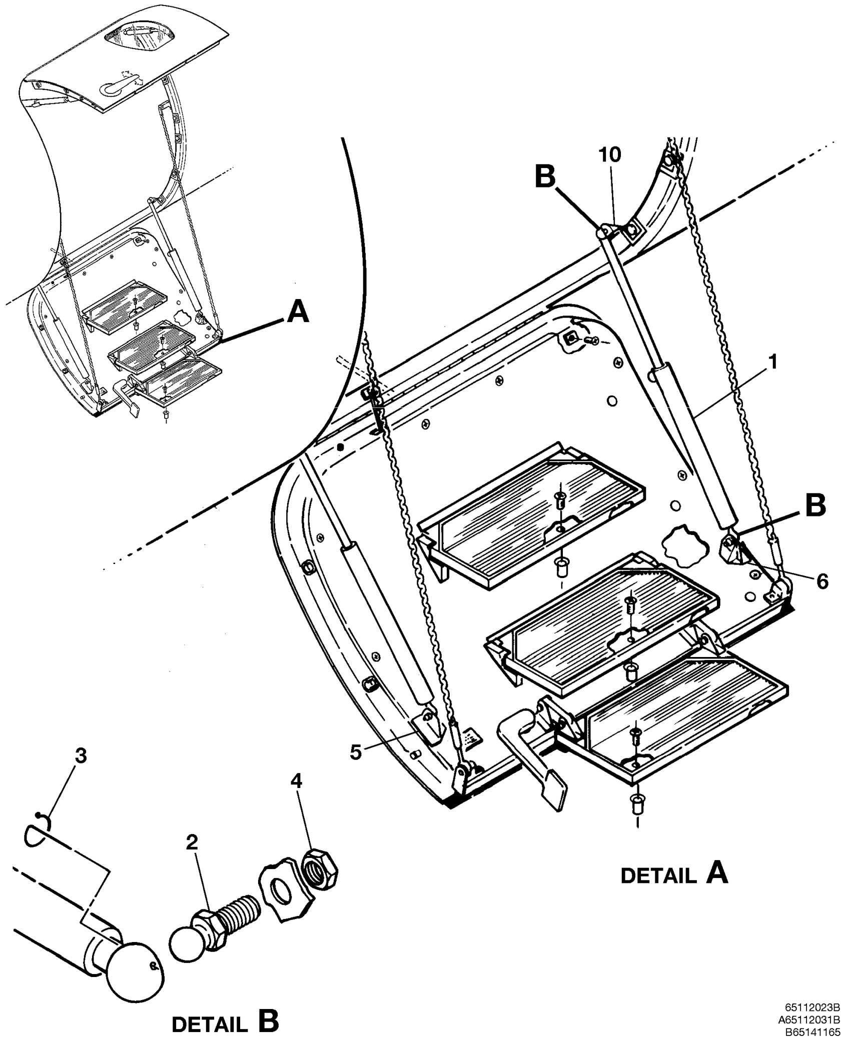

WIDE CABIN DOOR SPRINGS AND CHAIN
FIGURE 05 (SHEET 1)

FIG ITEM	PART NUMBER	NOMENCLATURE 1 2 3 4 5 6 7				UNITS PER ASSY	
05							
-		WIDE CABIN DOOR SPRINGS AND CHAIN REFER TO NOTE 1		0250 0280	0250 & ON	RF	
1	9912343-1	. DAMPER ASSY-LOWER WIDE CABIN DOOR	V55787			02	
2	A9012	. BALL STUD-UPPER AND LOWER FSO 4486MD	V55787			NP	R
- 2A	4486MD	. BALL STUD-UPPER AND LOWER				04	R
3	A9002	. SAFETY CLIP-UPPER AND LOWER FSO 657735	V55787			NP	
- 3A	657735	. LOCKING CLIP-UPPER AND LOWER FOR SPARES ONLY	V55787			04	
4	A9043	. NUT-UPPER AND LOWER	V55787			04	
5	6511219-29	. MOUNT WELDMENT ASSY-FORWARD LOWER		0280	0544	01	
- 5A	6511219-42	. MOUNT WELDMENT ASSY-FORWARD LOWER		0545	& ON	01	
6	6511219-30	. MOUNT ASSY-AFT LOWER		0280	0544	01	
- 6A	6511219-43	. MOUNT WELDMENT ASSY-AFT LOWER ATTACHING PARTS		0545	& ON	01	
- 7	MS27039-1-08	. SCREW				03	
- 8	NAS1149F0363P	. WASHER				03	
- 9	MS21069L3	. NUTPLATE —*—				02	
10	6511219-23	. MOUNT WELDMENT ASSY-AFT UPPER AND LOWER		0250 0280	0250 0523	02	
- 10A	6511219-35	. WELDMENT ASSY-MOUNT AFT UPPER AND LOWER		0524	0544	02	
- 10B	6511219-45	. WELDMENT ASSY-MOUNT AFT UPPER AND LOWER		0545	& ON	02	
- 10C	6511219-34	. BRACKET ASSY-MOUNT AFT UPPER AND FORWARD LOWER REFER TO NOTE 2		0545	& ON	01	
- 10D	6511219-44	. BRACKET ASSY-MOUNT AFT UPPER AND FORWARD LOWER REFER TO NOTE 2		0545	& ON	01	
- 11	MS27039-1-11	. SCREW				02	
- 12	MS27039-1-08	. SCREW				02	
- 13	NAS1149F0363P	. WASHER				04	
- 14	MS21069L3	. NUTPLATE				02	

NOTE 1—AIRPLANES -0250 AND -0280 AND ON AND AIRPLANES -0001 THRU -0538 INCORPORATING SB560-52-04. R

NOTE 2—WHEN ORDERING THIS PART IDENTIFY AIRPLANE MODEL AND SERIAL NUMBER

- ITEM NOT ILLUSTRATED

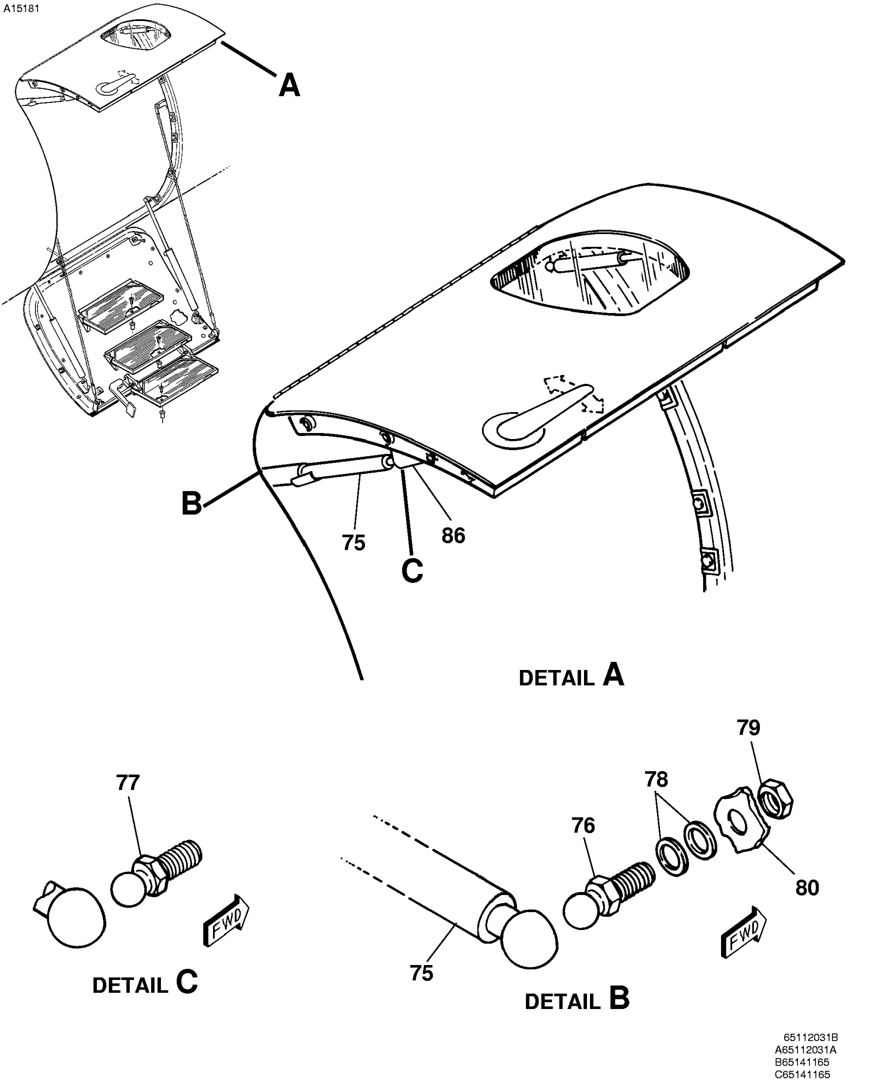

WIDE CABIN DOOR SPRINGS AND CHAIN
FIGURE 05 (SHEET 2)

FIG ITEM	PART NUMBER	NOMENCLATURE 1 2 3 4 5 6 7				UNITS PER ASSY
05						
75	6511329-2	. GAS SPRING-UPPER WIDE CABIN DOOR FORWARD REF 087548-03-08-150-0400N FSO 6511329-2 REFER TO NOTE 1		0251 0280	0251 0544	NP
- 75A	6511329-2	. GAS SPRING ASSY-LOCKING-UPPER WIDE CABIN DOOR		0545	& ON	01
76	A9012	. . BALL STUD-FSO 4486MD	V55787			NP R
- 76A	4486MD	. . BALL STUD				01 R
77	A9008	. BALL STUD	V55787			01
78	NAS1149F0363P	. WASHER				02
79	A9043	. NUT	V55787			01
80	6511219-28	. MOUNT ASSY-FUSELAGE FORWARD		0250 0280	0250 0486	01
- 80A	6511219-23	. MOUNT WELDMENT ASSY		0487	0523	01
- 80B	6511219-35	. WELDMENT ASSY-MOUNT		0524	& ON	01
		ATTACHING PARTS				
- 81	MS27039-1-11	. SCREW				02
- 82	MS27039-1-08	. SCREW				02
- 83	NAS1149F0363P	. WASHER				04
- 84	NAS1330S3K166	. NUT				02
- 85	MS21069L3	. NUTPLATE				02
		—*—				
86	6511219-7	. BRACKET ASSY-DOOR FORWARD		0111	0544	01
- 86A	6511219-41	. BRACKET ASSY-DOOR FORWARD		0545	& ON	01
		ATTACHING PARTS				
- 87	MS27039-1-08	. SCREW				02
- 88	NAS1149F0363P	. WASHER				02
- 89	MS21086L3	. NUTPLATE				02
		—*—				

NOTE 1—THIS PART MUST BE STORED WITH THE CYLINDER END UP

- ITEM NOT ILLUSTRATED

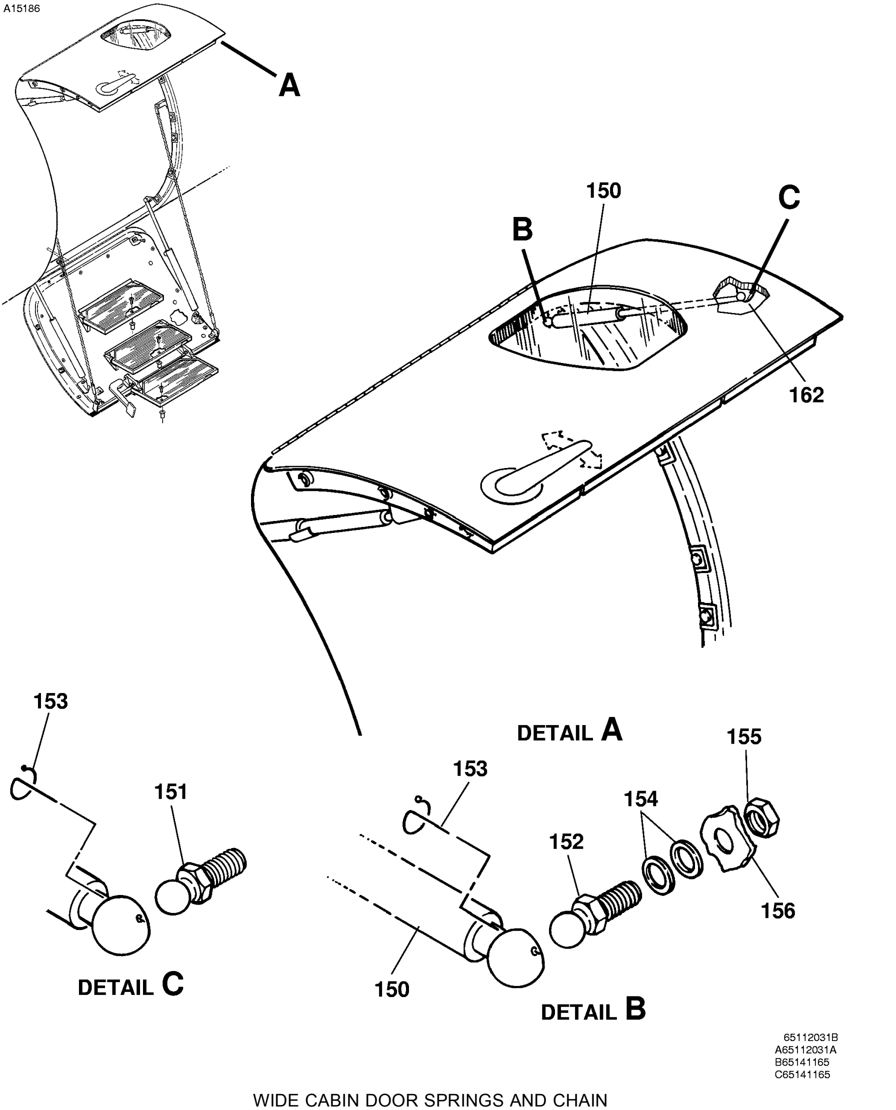

WIDE CABIN DOOR SPRINGS AND CHAIN
FIGURE 05 (SHEET 3)

FIG ITEM	PART NUMBER	NOMENCLATURE 1 2 3 4 5 6 7				UNITS PER ASSY
05						
150	6511329-1	. GAS SPRING-UPPER WIDE CABIN DOOR AFT FSO 6511329-1 REFER TO NOTE 1	V55787	0280	0544	NP
- 150A	6511329-1	. GAS SPRING ASSY-UPPER WIDE CABIN DOOR AFT FSO REFER TO NOTE 1		0545	0750	01
151	A9008	. BALL STUD-LOWER	V55787			01
152	A9012	. BALL STUD-UPPER FSO 4486MD	V55787			NP R
- 152A	4486MD	. BALL STUD				01 R
153	A9002	. SAFETY CLIP-UPPER AND LOWER FSO 657735	V55787			NP
- 153A	657735	. LOCKING CLIP-UPPER AND LOWER FOR SPARES ONLY	V55787			02
154	NAS1149F0363P	. WASHER-UPPER				02
155	A9043	. NUT-UPPER	V55787			01
156	6511219-9	. BRACKET ASSY-FUSELAGE AFT		0250 0280	0250 0486	01
- 156A	6511219-4	. WELD ASSY-MOUNT		0487	0523	01
- 156B	6511219-34	. WELD ASSY-MOUNT		0524	& ON	01
		ATTACHING PARTS				
- 157	MS27039-1-11	. SCREW				02
- 158	MS27039-1-08	. SCREW				02
- 159	NAS1149F0363P	. WASHER				04
- 160	NAS1330S3K166	. NUT				02
- 161	MS21069L3	. NUTPLATE				02
		—*—				
162	6511219-6	. BRACKET ASSY-DOOR AFT		0111	0544	01
- 162A	6511219-40	. BRACKET ASSY-DOOR AFT		0545	& ON	01
- 163	MS27039-1-08	. SCREW				02
- 164	NAS1149F0363P	. WASHER				02
- 165	MS21071L3	. NUTPLATE				02

NOTE 1—THIS PART MUST BE STORED WITH THE CYLINDER END UP

- ITEM NOT ILLUSTRATED

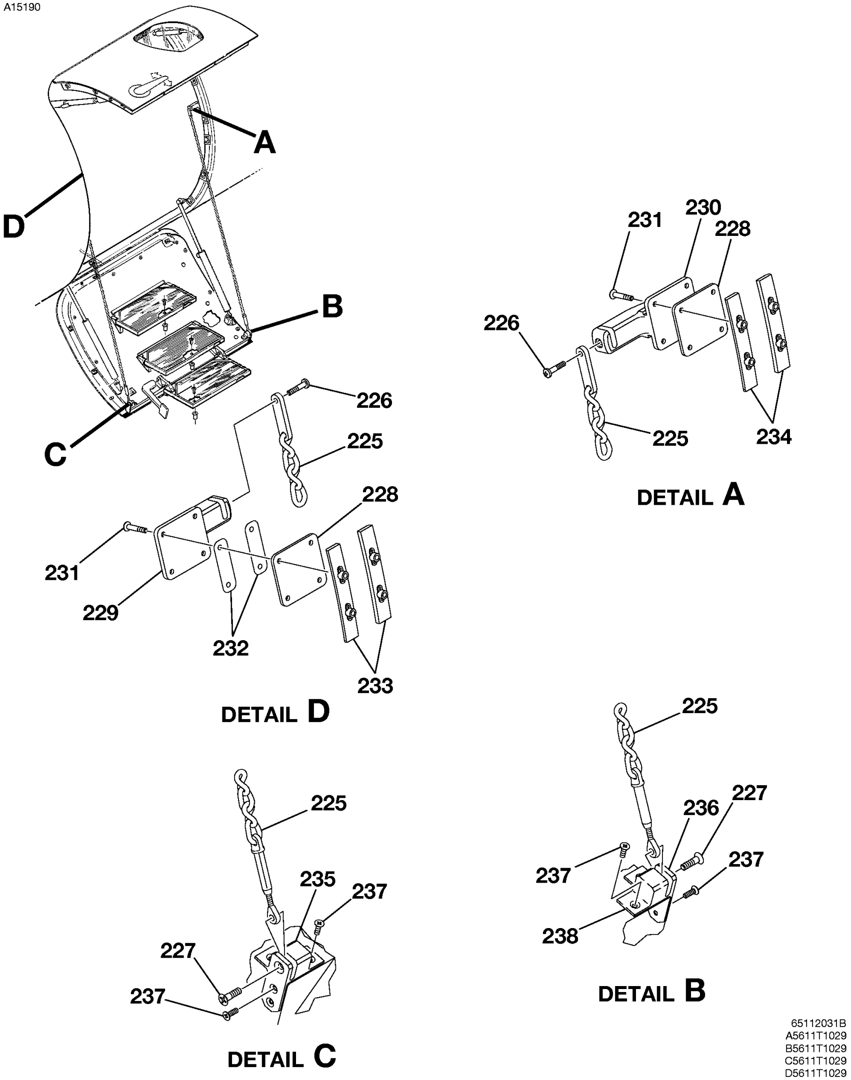

WIDE CABIN DOOR SPRINGS AND CHAIN
FIGURE 05 (SHEET 4)

FIG ITEM	PART NUMBER	NOMENCLATURE 1 2 3 4 5 6 7	UNITS PER ASSY
05			
225	6511284-18	. CHAIN ASSY-WIDE DOOR FORWARD AND AFT	02
		ATTACHING PARTS	
226	CM3736-3	. SCREW-UPPER	01
227	MS24694-S101	. SCREW-LOWER	01
		—*—	
228	6511284-8	. INSULATOR FORWARD AND AFT-REFER TO NOTE 1	02
229	6511284-14	. FITTING-CHAIN FORWARD	01
230	6511284-15	. FITTING-CHAIN AFT	01
		ATTACHING PARTS	
231	MS24694-S59	. SCREW-REFER TO NOTE 1	04
232	6511284-20	. SHIM-FORWARD-REFER TO NOTE 1	AR
233	6511284-10	. NUTPLATE STRIP FORWARD-REFER TO NOTE 1	02
234	6511284-12	. NUTPLATE STRIP AFT-REFER TO NOTE 1	02
		—*—	
235	6511284-3	. BRACKET-LOWER	01
236	6511284-4	. BRACKET-LOWER	01
		ATTACHING PARTS	
237	MS24694-S51	. SCREW	04
238	MS21069L3	. NUTPLATE	04
		—*—	

NOTE 1—AIRPLANES -0539 AND ON INCORPORATING SB560-52-21.

- ITEM NOT ILLUSTRATED

A15194

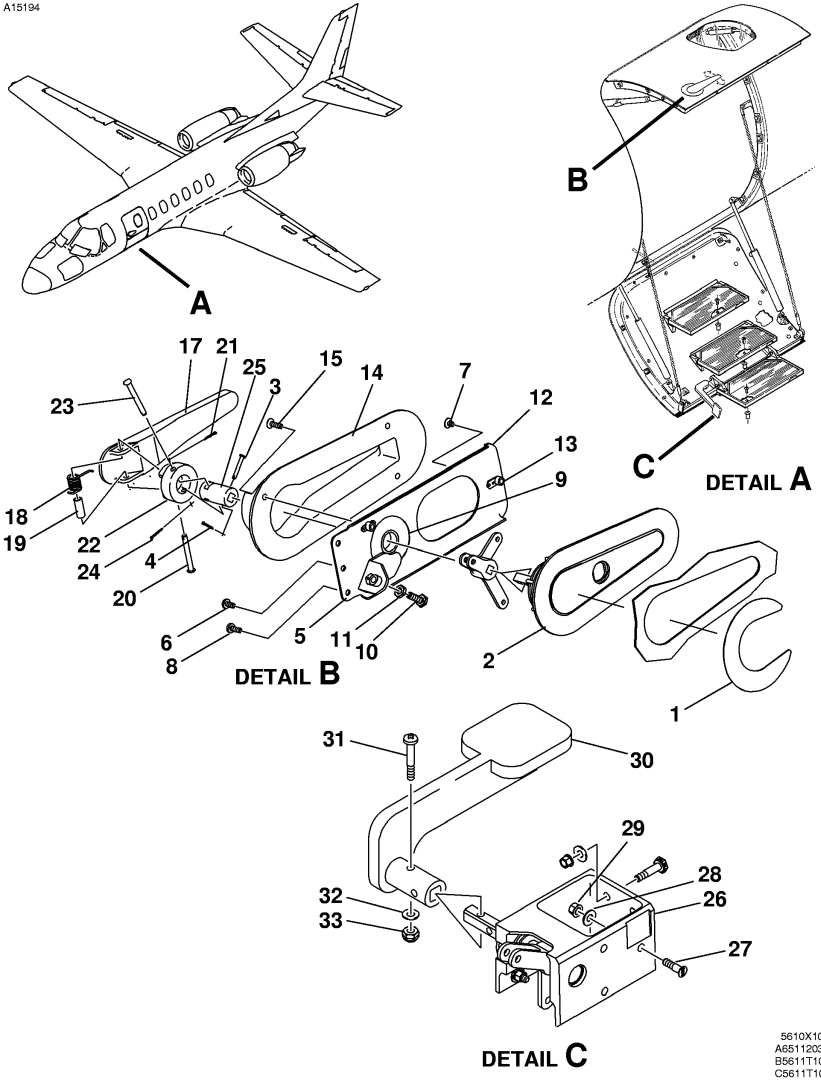

5610X1036
A65112031B
B5611T1028
C5611T1025

WIDE CABIN DOOR HANDLES
FIGURE 06 (SHEET 1)

FIG ITEM	PART NUMBER	NOMENCLATURE 1 2 3 4 5 6 7			UNITS PER ASSY
06					
-		WIDE CABIN DOOR HANDLES REFER TO NOTE 1	0250 0280	0250 & ON	RF
1	5511230-29	. SHIELD-HANDLE			01
2	6511305-32	. HANDLE-OUTER WIDE CABIN DOOR			01
3	MS20392-1C25	. PIN			01
4	MS24665-132	. PIN-COTTER			01
5	6511305-69	. CHANNEL ASSY FSO 6511305-107	0250 0280	0250 0647	NP
- 5A	6511305-107	. CHANNEL ASSY	0648	& ON	01
		ATTACHING PARTS			
6	MS27039-1-06	. SCREW			01
7	MS24694-S46	. SCREW			01
8	MS27039-1-08	. SCREW			02
		—*—			
9	6511305-70	. . BEARING ASSY			01
10	NAS428-4A6	. . BOLT			01
11	AN316-4R	. . NUT			01
12	MS21069L3	. . NUTPLATE			01
13	MS21071L3	. . NUTPLATE			01
14	6511305-31	. GUARD–HANDLE FSO 6511305-96	0280	0386	NP
- 14A	6511305-96	. GUARD–HANDLE	0387	0544	01
- 14B	6511305-106	. GUARD–HANDLE	0545	& ON	01
		ATTACHING PARTS			
15	MS24694-S52	. SCREW			03
		—*—			
- 16	6511305-33	. HANDLE ASSY-INNER UPPER CABIN DOOR FSO 6511305-94	0280	0386	NP
- 16A	6511305-94	. HANDLE ASSY-INNER UPPER CABIN DOOR	0387	0544	01
- 16B	6511305-103	. HANDLE ASSY-INNER UPPER CABIN DOOR	0545	& ON	01
17	6511305-36	. . HANDLE	0387	0544	01
- 17A	6511305-105	. . HANDLE	0545	& ON	01
18	6511217-50	. . SPRING			01
19	NAS43DD3-48N	. . SPACER			01
20	MS20392-2C43	. . PIN			01
21	MS24665-132	. . PIN-COTTER			01
22	6511305-34	. . BLOCK FSO 6511305-95	0280	0386	NP
- 22A	6511305-95	. . BLOCK	0387	0544	01
- 22B	6511305-104	. . BLOCK	0545	& ON	01
23	MS20392-2C49	. . PIN			01
24	MS24665-132	. . PIN-COTTER			01
25	6511305-35	. . SPINDLE			01
26	6511305-90	. SUPPORT ASSY-HANDLE			01
		ATTACHING PARTS			
27	NAS1581A3R5	. SCREW			03
28	NAS1149F0332P	. WASHER			03
29	MS21042L3	. NUT			03
		—*—			
30	6511305-1	. HANDLE ASSY-INNER LOWER CABIN WIDE DOOR	0250	0544	01
- 30A	6511305-101	. HANDLE ASSY-INNER LOWER CABIN WIDE DOOR	0545	& ON	01
		ATTACHING PARTS			
31	MS27039-1-19	. SCREW	0250	0544	02
- 31A	MS27039-1-19	. SCREW	0545	& ON	01
32	NAS1149F0332P	. WASHER	0250	0544	02
- 32A	NAS1149F0332P	. WASHER	0545	& ON	01
33	MS21045C3	. NUT	0250	0544	02
- 33A	MS21045C3	. NUT	0545	& ON	01
		—*—			

NOTE 1—AIRPLANES -0250 AND -0280 AND ON AND AIRPLANES -0001 THRU -0538 INCORPORATING SB560-52-04. R

- ITEM NOT ILLUSTRATED

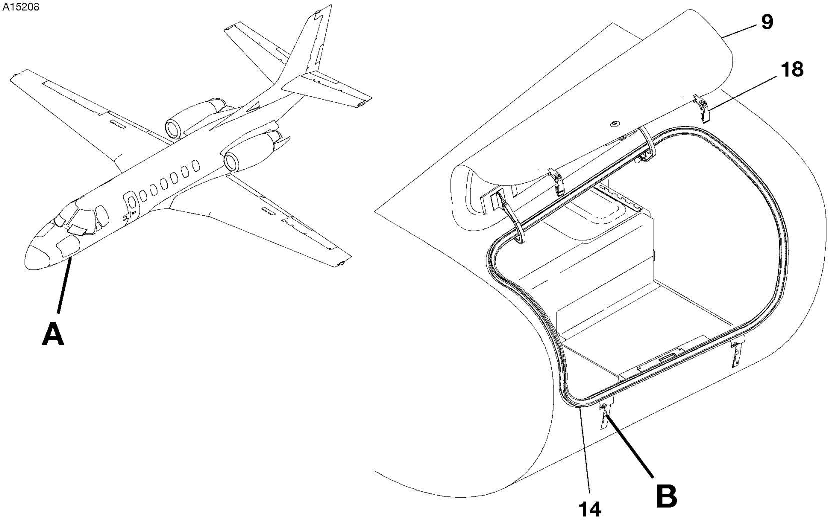

DETAIL A

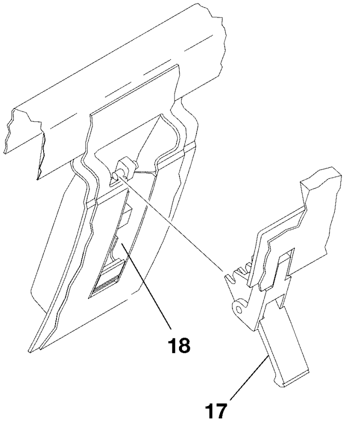

DETAIL B

5610T1001A
A6313T1003
B6213T2001

NOSE BAGGAGE DOOR
FIGURE 01 (SHEET 1)

FIG ITEM	PART NUMBER	NOMENCLATURE 1 2 3 4 5 6 7				UNITS PER ASSY
01						
-		NOSE BAGGAGE DOOR		0002	0259	RF
- 1	DDA0064-3	. DOOR ASSY-NOSE BAGGAGE LH REF 6513000 REFER TO NOTE 6		0002	0005	01 R
- 1A	5513066-1	. DOOR ASSY-NOSE BAGGAGE LH REFER TO NOTE 1 AND NOTE 2		0006	0199	01
- 2	5513066-83	. DOOR ASSY-NOSE BAGGAGE LH REFER TO NOTE 1 AND NOTE 2 FSO 5513066-87		0200	0259	NP
- 3	5513066-87	. DOOR ASSY-NOSE BAGGAGE LH REFER TO NOTE 1 AND NOTE 2				01
- 4	DDA0064-4	. DOOR ASSY-NOSE BAGGAGE RH REF 6513000 REFER TO NOTE 6		0002	0005	01 R
- 4A	5513066-2	. DOOR ASSY-NOSE BAGGAGE RH REFER TO NOTE 1 AND NOTE 2		0006	0199	01
- 5	5513066-84	. DOOR ASSY-NOSE BAGGAGE RH REFER TO NOTE 1 AND NOTE 2 FSO 5513066-88		0200	0259	NP
- 6	5513066-88	. DOOR ASSY-NOSE BAGGAGE RH REFER TO NOTE 1 AND NOTE 2				01
- 7	5513066-43	. . DOOR ASSY-BONDED LH		0002	0005	01
- 7A	5513066-63	. . DOOR ASSY-BONDED LH FSO 5513006-85 REFER TO NOTE 4		0006	0199	NP
- 8	5513066-85	. . DOOR ASSY-BONDED LH FSO 5513066-89 REFER TO NOTE 4		0200	0259	NP
9	5513066-89	. . DOOR ASSY-BONDED LH				01
- 10	5513066-44	. . DOOR ASSY-BONDED RH		0002	0005	01
- 10A	5513066-62	. . DOOR ASSY-BONDED RH FSO 5513066-90 REFER TO NOTE 5		0006	0199	NP
- 11	5513066-86	. . DOOR ASSY-BONDED RH FSO 5513066-90 REFER TO NOTE 5		0200	0259	NP
- 12	5513066-90	. . DOOR ASSY-BONDED LH				01
- 13	5513066-21	. . SEAL ASSY		0002	0199	02
14	6313044-3	. . SEAL		0200	0259	02
- 15	5513066-22	. . . SEAL		0002	0199	01
- 16	5513066-41	. . . SEAL SPLICE		0002	0199	01
17	5513042-5	. . HANDLE ASSY REFER TO NOTE 1, NOTE 2 AND NOTE 3				NP
18	H26-15	. HOUSING ASSY-BAGGAGE DOOR LATCH REFER TO NOTE 2 AND NOTE 3	V83014			04
- 19	10501100-15	. HOUSING ASSY-BAGGAGE DOOR LATCH ALT FOR H26-15 REFER TO NOTE 2 AND NOTE 3	V83014			04
- 20	SL1901-24	. HOUSING ASSY-BAGGAGE DOOR LATCH ALT FOR H26-15 REFER TO NOTE 2 AND NOTE 3 FSO SL1901-241	VSLCO			04
- 21	SL1901-246	. HOUSING ASSY-BAGGAGE DOOR LATCH ALT FOR H26-15 REFER TO NOTE 2 AND NOTE 3 FSO SL190-241	VSLCO			04
- 22	SL1901-241	. HOUSING ASSY-BAGGAGE DOOR LATCH ALT FOR H26-15 REFER TO NOTE 2 AND NOTE 3	VSLCO			04

NOTE 1—WHEN ORDERING THIS PART, SPECIFY HARTWELL, D AND D OR SALCO LATCHES

NOTE 2—DO NOT INTERMIX HANDLE MANUFACTURERS WITH MATING HOUSING ASSEMBLIES

NOTE 3—REFER TO MAINTENANCE MANUAL FOR INSTALLATION INSTRUCTIONS

NOTE 4—WHEN REPLACING THIS PART WITH 5513066-89 ALSO ORDER 6313044-3 SEAL

NOTE 5—WHEN REPLACING THIS PART WITH 5513066-90 ALSO ORDER 6313044-3 SEAL

NOTE 6—WHEN ORDERING DDA PART NUMBERS, ALSO PROVIDE REFERENCE DRAWING NUMBER SHOWN IN NOMENCLATURE. R

- ITEM NOT ILLUSTRATED

A15210

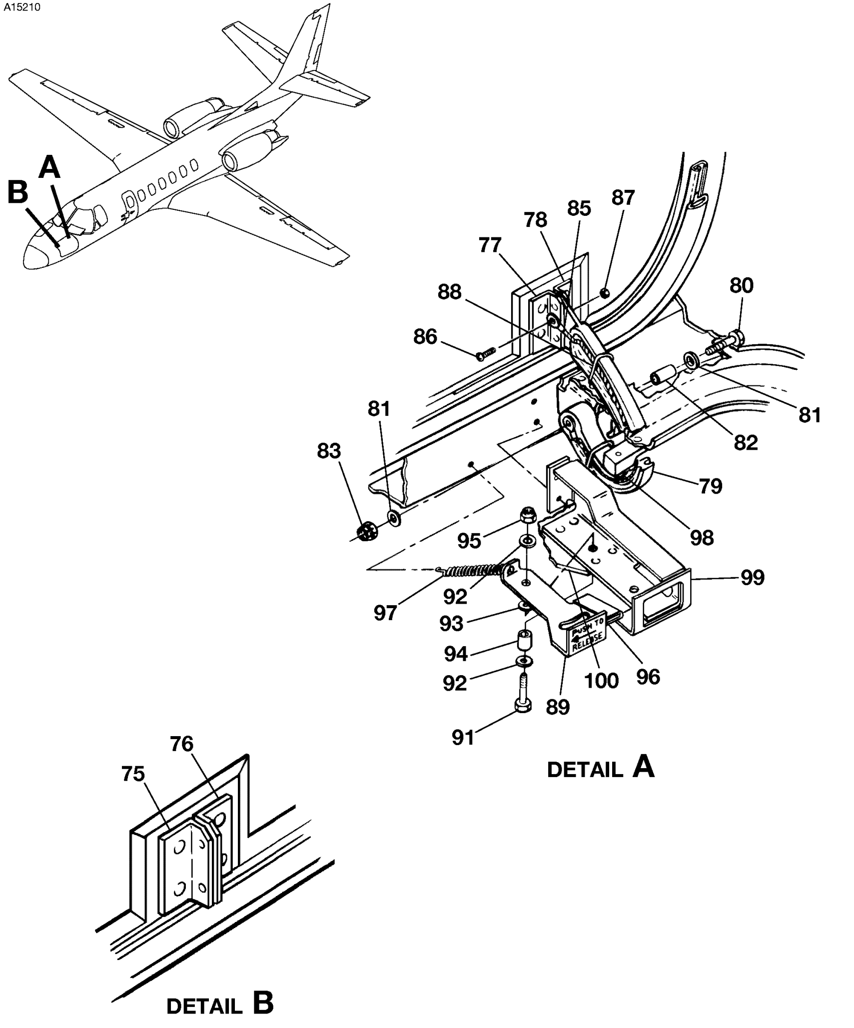

5610T1001A
A55133016
B55133003

NOSE BAGGAGE DOOR
FIGURE 01 (SHEET 2)

FIG ITEM	PART NUMBER	NOMENCLATURE 1 2 3 4 5 6 7	UNITS PER ASSY
01			
75	5513044-12	. ANGLE-HINGE ATTACH LH AND RH	01
76	5513044-10	. ANGLE-HINGE ATTACH LH AND RH	01
77	5513044-9	. ANGLE-HINGE ATTACH LH AND RH	01
78	5513044-11	. ANGLE-HINGE ATTACH LH AND RH	01
79	5513045-1	. HINGE ASSY-BAGGAGE DOOR	04
80	AN3-10A	. BOLT-HINGE ATTACH	01
81	NAS1149D0363J	. WASHER-HINGE ATTACH	02
82	NAS75-3-014	. BUSHING-HINGE ATTACH	01
83	MS21042-3	. NUT-HINGE ATTACH	01
- 84	S1003-69A	. . BUSHING	01
85	MS25083-2AB8	. JUMPER ASSY	02
86	MS35206-233	. SCREW	01
87	MS21042-06	. NUT	01
88	CM2679-2	. TIE STRAP	04
89	5513048-17	. STOP ASSY-LH	01
- 90	5513048-18	. STOP ASSY-RH	01
		ATTACHING PARTS	
91	AN3-5A	. BOLT	02
92	NAS1149F0332P	. WASHER	04
93	NAS1149F0332P	. WASHER USE ONLY AS NEEDED BETWEEN BKT & STOP	02
94	5513048-12	. SPACER	02
95	MS21045-3	. NUT	02
		—*—	
96	5513048-19	. . RUB STRIP	02
97	5513048-8	. SPRING	02
98	5513048-22	. BUMPER	02
99	5513048-23	. GUARD	02
100		. GUSSET REFER TO 53-10-00 FIGURE 01	RF

- ITEM NOT ILLUSTRATED

A15182

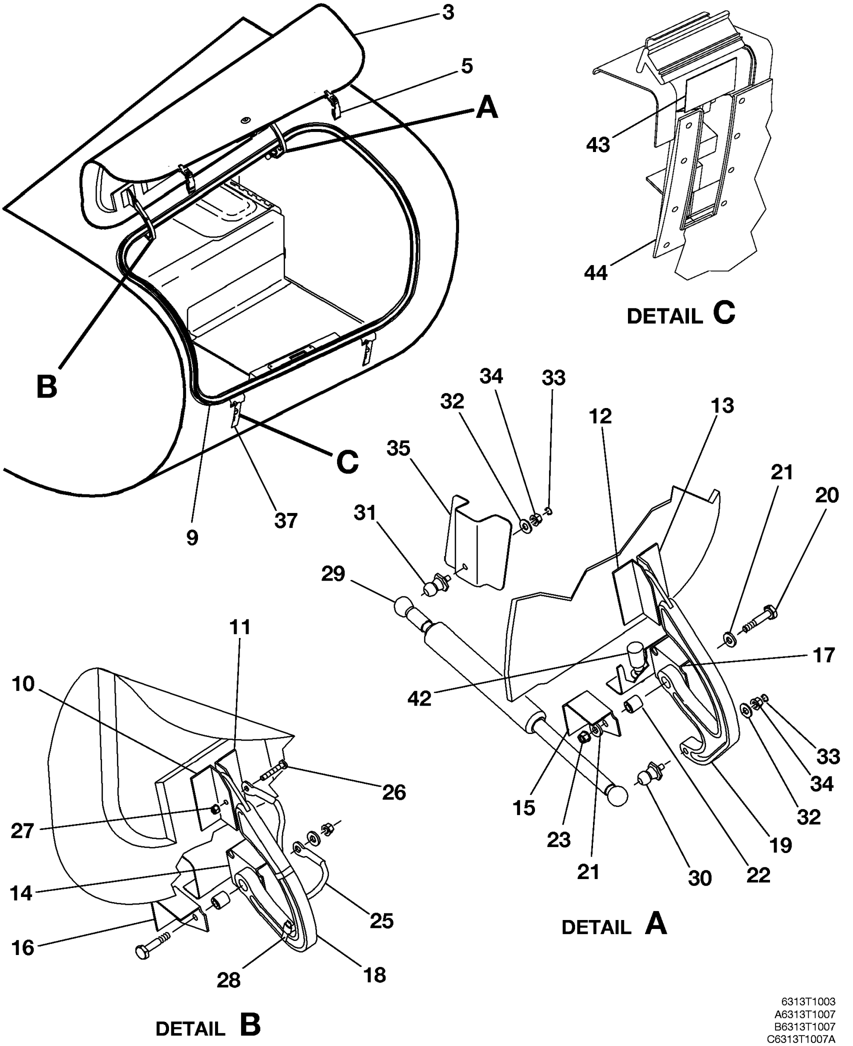

NOSE BAGGAGE DOOR
FIGURE 01A (SHEET 1)

FIG ITEM	PART NUMBER	NOMENCLATURE 1 2 3 4 5 6 7				UNITS PER ASSY
01A						
-		NOSE BAGGAGE DOOR		0260	& ON	RF
- 1	5513066-87	. DOOR ASSY-LH-NOSE BAGGAGE REFER TO NOTE 1 AND NOTE 2				01
- 2	5513066-88	. DOOR ASSY-RH-NOSE BAGGAGE REFER TO NOTE 1 AND NOTE 2				01
3	5513066-89	. . BOND ASSY-LH-DOOR				01
- 4	5513066-90	. . BOND ASSY-RH-DOOR				01
5	H26-27	. . HANDLE REFER TO NOTE 1, NOTE 2 AND NOTE 3	V83014			02
- 6	10501200-15	. . LATCH ASSY ALT FOR H26-27 REFER TO NOTE 1, NOTE 2 AND NOTE 3	V83014			02
- 7	SL1902-24	. . PADDLE ASSY ALT FOR H26-27 REFER TO NOTE 1, NOTE 2 AND NOTE 3	VSLCO			02
- 8	SL1902-246	. . HANDLE ASSY ALT FOR SL1902-24 REFER TO NOTE 1, NOTE 2 AND NOTE 3	VSLCO			02
9	6313044-3	. SEAL				02
10	5513044-12	. ANGLE-HINGE ATTACH				01
11	5513044-10	. ANGLE-HINGE ATTACH				01
12	5513044-9	. ANGLE-HINGE ATTACH				01
13	5513044-11	. ANGLE-HINGE ATTACH				01
14	5513044-22	. BRACKET				01
15	5513044-24	. BRACKET				01
16	5513044-23	. BRACKET				01
17	5513044-25	. BRACKET				01
18	5513045-1	. HINGE ASSY-FWD				01
19	6313045-1	. HINGE ASSY-AFT				01
		ATTACHING PARTS				
20	AN3-10A	. BOLT				01
21	AN960JD10	. WASHER				02
22	NAS75-3-014	. BUSHING				01
23	MS21042-3	. NUT				01
		—*—				
- 24	S1003-69A	. . BEARING				01
25	MS25083-2AB8	. JUMPER ASSY				02
26	MS35206-233	. SCREW				01
27	MS21042-06	. NUT				01
28	CM2679-2	. TIE STRAP				04
29	5311330-5	. EXTENDER ASSY-NOSE BAGGAGE DOOR				02
		ATTACHING PARTS				
30	6213066-48	. BALL STUD-HINGE				01
31	6213066-49	. BALL STUD-SUPPORT				01
32	NAS1149F0332P	. WASHER				02
33	A9002	. SAFETY CLIP-FSO 657735				NP R
- 33A	657735	. LOCKING CLIP-FOR SPARES ONLY				02 R
34	MS21042-3	. NUT				02
		—*—				
35	6313110-3	. EXTENDER SUPPORT LH				01
- 36	6313110-4	. EXTENDER SUPPORT RH				01
37	H26-15	. HOUSING-BAGGAGE DOOR LATCH REFER TO NOTE 2 AND NOTE 3. . . .	V83014	0260	0761	04
- 37A	9914343-4	. LATCH HOUSING-BAGGAGE DOOR LATCH REFER TO NOTE 2 AND NOTE 3		0762	& ON	04
- 38	10501100-15	. HOUSING-BAGGAGE DOOR LATCH ALT FOR H26-15 REFER TO NOTES 2 AND 3	V83014			04
- 39	SL1901-24	. HOUSING ASSY-BAGGAGE DOOR LATCH ALT FOR H26-15 REFER TO NOTES 2 AND 3 FSO SL1901-241	VSLCO			NP
- 40	SL1901-246	. LATCH HOUSING-BAGGAGE DOOR LATCH ALT FOR SL1901-24 REFER TO NOTE 2 AND NOTE 3 FSO SL1901-241	VSLCO			NP
- 41	SL1901-241	. HOUSING-BAGGAGE DOOR LATCH REFER TO NOTE 2 AND NOTE 3. . . .	VSLCO			04
42		. SWITCH-LIMIT LH AND RH NOSE BAGGAGE LIGHT REFER TO 33-30-00 FIGURE 01.				RF
43	5513042-13	. LATCH SHIELD				04
44	5513043-1	. SEAL				04

NOTE 1—WHEN ORDERING THIS PART, SPECIFY HARTWELL OR SALCO LATCHES

NOTE 2—DO NOT INTERMIX HANDLE MANUFACTURERS WITH MATING HOUSING ASSEMBLIES

NOTE 3—REFER TO MAINTENANCE MANUAL FOR INSTALLATION INSTRUCTIONS

- ITEM NOT ILLUSTRATED

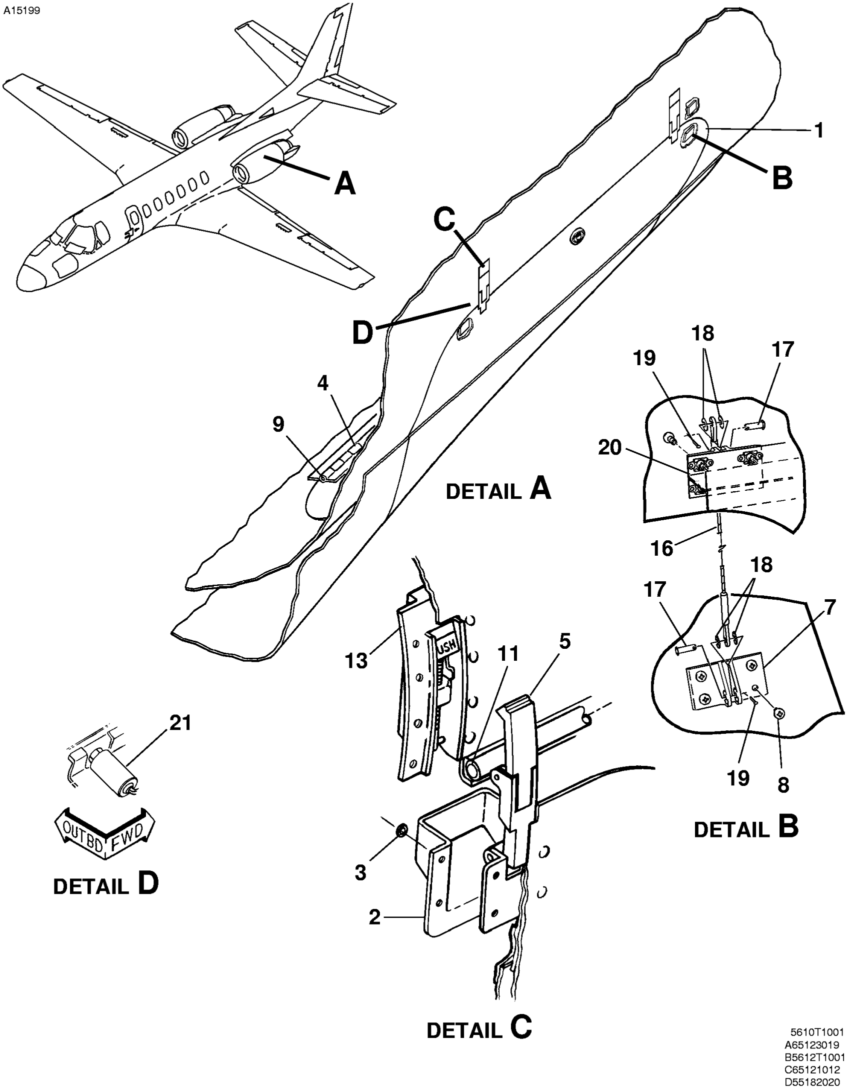

TAILCONE ACCESS DOOR
FIGURE 01 (SHEET 1)

FIG ITEM	PART NUMBER	NOMENCLATURE 1 2 3 4 5 6 7				UNITS PER ASSY
01						
-		TAILCONE ACCESS DOOR				RF
1	5512064-205	. DOOR SPARES KIT REFER TO NOTE 1		0001 0752	0750 & ON	01 R
2	5512061-3	. . SEAL CUP				02
3	NAS1149DN432K	. . WASHER				08
4	5512064-11	. . HINGE-HALF				01
5	5512064-19	. HANDLE ASSY REFER TO NOTE 2, NOTE 3 AND NOTE 4				02
- 6	SL1902-24A	. HANDLE ASSY ALT FOR 5512064-19 REFER TO NOTE 2 AND NOTE 3	VSLCO			02
7	5512064-33	. ANCHOR				01
		ATTACHING PARTS				
8	MS27039-1-06	. SCREW				04
		—*—				
9	MS20253P2-1780	. HINGE PIN				01
- 10	5512060-18	. SEAL-AFT				01
11	5512060-17	. SEAL - CENTER				01
- 12	5512060-16	. SEAL - FORWARD				01
13	H26-19	. HOUSING ASSY-BAGGAGE DOOR LATCH AFT REFER TO NOTE 2 AND 3	V83014			02
- 14	10501100-15	. HOUSING-BAGGAGE DOOR LATCH AFT ALT FOR H26-19 REFER TO NOTE 2 AND 3	V83014			02
- 15	SL1901-241	. HOUSING-BAGGAGE DOOR LATCH AFT ALT FOR H26-19 REFER TO NOTE 2 AND 3	VSLCO			02
- 15A	SL1901-24	. HOUSING ASSY-BAGGAGE DOOR LATCH AFT ALT FOR H26-19 REFER TO NOTE 2 AND 3	VSLCO			02
- 15B	SL1901-246	. LATCH HOUSING-BAGGAGE DOOR LATCH AFT ALT FOR H26-19 REFER TO NOTE 2 AND 3	VSLCO			02
16	5512064-32	. CABLE ASSY-FSO 5512064-47		0001	0538	NP
- 16A	5512064-47	. CABLE ASSY		0539	& ON	01
		ATTACHING PARTS				
17	MS20392-2C17	. PIN				02
18	NAS1149D0332K	. WASHER				04
19	MS24665-132	. COTTER PIN				02
		—*—				
20		. ANCHOR REFER TO 53-13-00 FIGURE 01				RF
21		. SWITCH-BAGGAGE COMPARTMENT LIGHT S103 REFER TO 33-20-01 FIGURE 01				RF

NOTE 1—LATCHES WHICH CONSIST OF A HANDLE ASSY AND HOUSING ASSY ARE NOT INCLUDED WITH THE DOOR KIT. USE EXISTING LATCHES OR ORDER NEW LATCHES.

NOTE 2—DO NOT INTERMIX HANDLE MANUFACTURERS WITH MATING HOUSING ASSEMBLIES.

NOTE 3—REFER TO MAINTENANCE MANUAL FOR INSTALLATION INSTRUCTIONS.

NOTE 4—WHEN ORDERING THIS PART, SPECIFY HARTWELL, SALCO OR D AND D LATCHES.

- ITEM NOT ILLUSTRATED

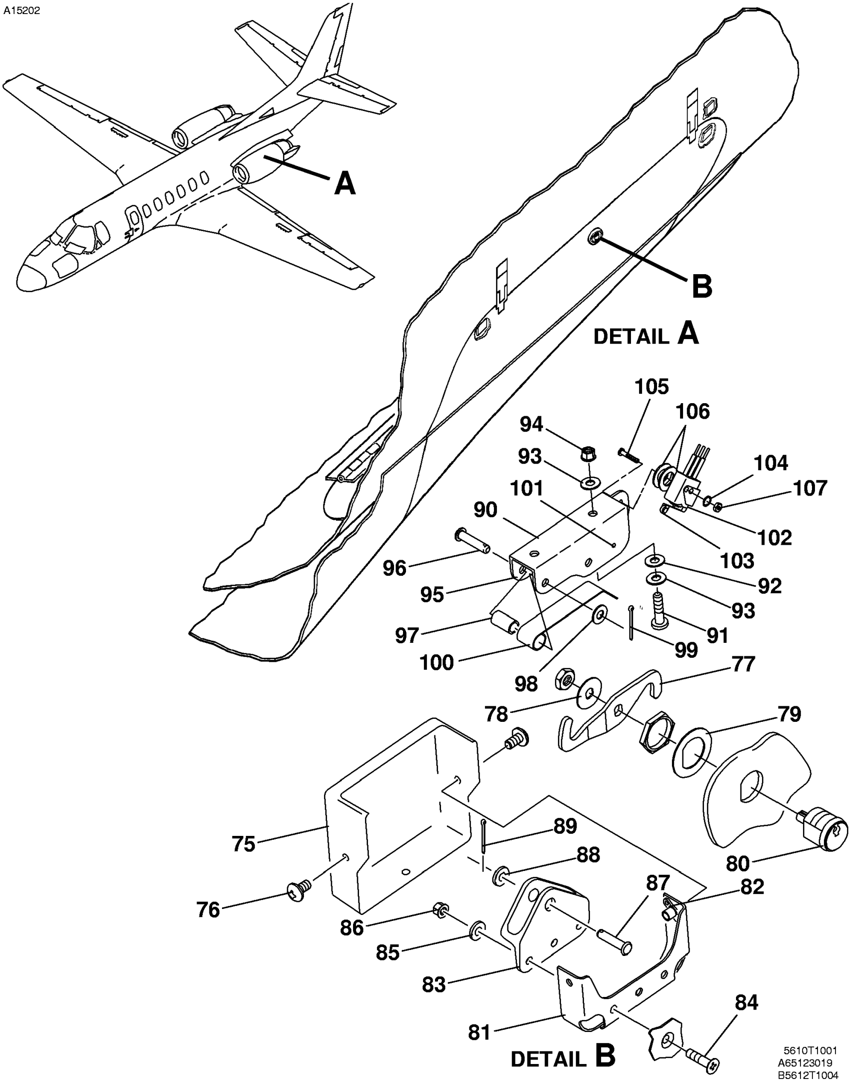

TAILCONE ACCESS DOOR
FIGURE 01 (SHEET 2)

FIG ITEM	PART NUMBER	NOMENCLATURE 1 2 3 4 5 6 7				UNITS PER ASSY
01						
75	4811323-2	. COVER-TAILCONE BAGGAGE DOOR LOCK		0001	0538	01
		ATTACHING PARTS				
76	CM3922-8-7BG	. SCREW				03
		—*—				
77	6512105-4	. CAM-TAILCONE BAGGAGE DOOR LOCK				01
78	6512105-7	. LOCKWASHER				01
79	6512105-6	. LOCKWASHER				01
80	60W1251T129	. CAM LOCK-REFER TO NOTE 1	V56337			01
81	6513003-10	. BRACKET ASSY				01
82	MS21069L08	. . NUTPLATE				03
83	6513003-4	. FITTING				01
		ATTACHING PARTS				
84	MS24694-S56	. SCREW				02
85	NAS1149F0363P	. WASHER				02
86	MS21042L3	. NUT				02
		—*—				
87	MS20392-2C23	. PIN				02
88	NAS1149F0332P	. WASHER				02
89	MS24665-134	. COTTER PIN				02
90	6512105-2	. ANCHOR ASSY FSO 6512105-9		0001	0349	NP
- 90A	6512105-9	. ANCHOR ASSY		0350	& ON	01
		ATTACHING PARTS				
91	MS27039-1-12	. SCREW				02
92	NAS1149F0332P	. WASHER				AR
93	NAS1149F0363P	. WASHER				AR
94	MS21042L3	. NUT				02
		—*—				
95	6512105-3	. . ANCHOR				01
96	MS20392-2C27	. . PIN				02
97	NAS43HT3-36	. . SPACER				01
98	NAS1149F0332P	. . WASHER				02
99	MS24665-134	. . COTTER PIN				02
100	6512105-5	. . ARM FSO 6212105-8		0001	0349	NP
- 100A	6512105-8	. . ARM		0350	& ON	01
101	MS24665-138	. . COTTER PIN				01
102	MS27994-1	. . SWITCH				01
103	JM5	. . ACTUATOR-SWITCH	V91929			01
104	NAS1149F0563P	. . WASHER				02
105	MS35206-207	. . SCREW				02
106	AN936A2	. . WASHER				02
107	MS35649-222	. . NUT				02

NOTE 1—KEY IDENTIFICATION TAG NUMBER AND PROOF OF OWNERSHIP (COPY OF AIRCRAFT REGISTRATION) MUST BE SUPPLIED TO OBTAIN REPLACEMENT LOCKS AND/OR KEYS.

- ITEM NOT ILLUSTRATED

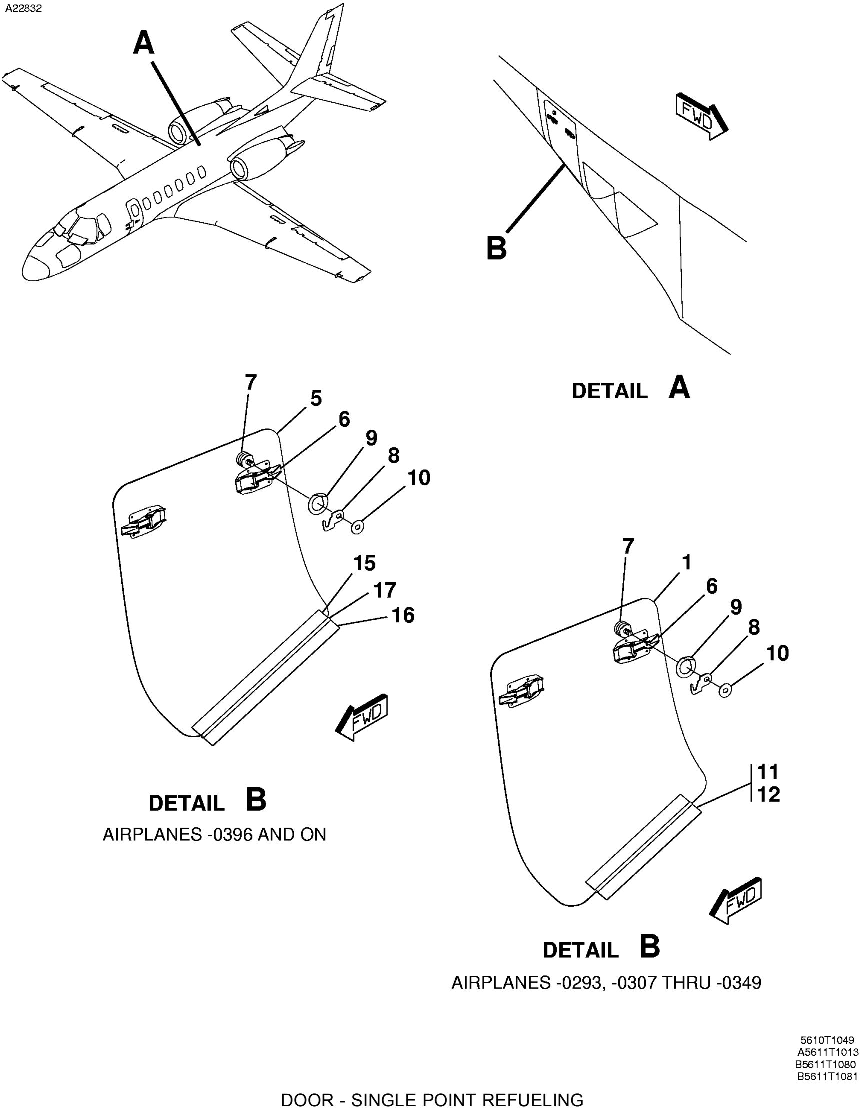

DOOR - SINGLE POINT REFUELING
FIGURE 02 (SHEET 1)

FIG ITEM	PART NUMBER	NOMENCLATURE 1 2 3 4 5 6 7				UNITS PER ASSY
02						
-		DOOR - SINGLE POINT REFUELING				RF
1	6511113-32	. DOOR ASSY-SINGLE POINT REFUELING ACCESS FSO 6511113-200		0293 0307 0334	0293 0332 0334	NP
- 2	6511113-32	. DOOR ASSY-SINGLE POINT REFUELING ACCESS FSO 6511113-55		0333 0335	0333 0349	NP
- 3	6511113-200	. DOOR ASSY-SINGLE POINT REFUELING ACCESS		0293 0307 0334	0293 0332 0334	01
- 4	6511113-54	. DOOR ASSY-SINGLE POINT REFUELING ACCESS FSO 6511113-55		0350	0395	NP
5	6511113-55	. DOOR ASSY-SINGLE POINT REFUELING ACCESS		0396	& ON	01 R
6	H-5000C-081-156	. . LATCH-DOOR	V83014	0293 0307	0293 & ON	02 R
- 6A	H5000-2-081-156	. . LATCH-DOOR-ALT FOR H-5000C-081-156	V83014	0293 0307	0293 & ON	02 R
7	60W1251T129	. . CAM LOCK-DOOR-REFER TO NOTE 3	V56337	0293 0307	0293 0538	01
8	6511113-53	. . CAM-DOOR LOCK		0293 0307	0293 0538	01
9	6512105-6	. . LOCKWASHER		0293 0307	0293 0538	01
10	6512105-7	. . LOCKWASHER		0293 0307	0293 0538	01
11	6511113-31	. . HINGE HALF		0293 0307	0293 0395	02
12	MS20253-2-700	. . PIN-HINGE REFER TO NOTE 1		0293 0307	0293 0334	01
- 13	MS20253-2-680	. . PIN-HINGE REFER TO NOTE 2		0350	0395	01
- 14	MS20253-2-946	. . PIN-HINGE REF DDA1162		0335	0395	01
15	6511113-58	. . HINGE HALF-DOOR		0396	& ON	01 R
16	6511113-61	. . HINGE HALF-FAIRING		0396	& ON	01 R
17	MS20253-2-946	. . PIN-HINGE		0396	& ON	01 R

NOTE 1—AIRPLANES -0293 AND -0307 THRU -0349 NOT INCORPORATING SB560-52-06.

NOTE 2—AIRPLANES -0350 THRU -0395 AND AIRPLANES -0335 THRU -0349 INCORPORATING SB560-52-06.

NOTE 3—KEY IDENTIFICATION TAG NUMBER AND PROOF OF OWNERSHIP (COPY OF AIRCRAFT REGISTRATION) MUST BE SUPPLIED TO OBTAIN REPLACEMENT LOCKS AND/OR KEYS.

- ITEM NOT ILLUSTRATED

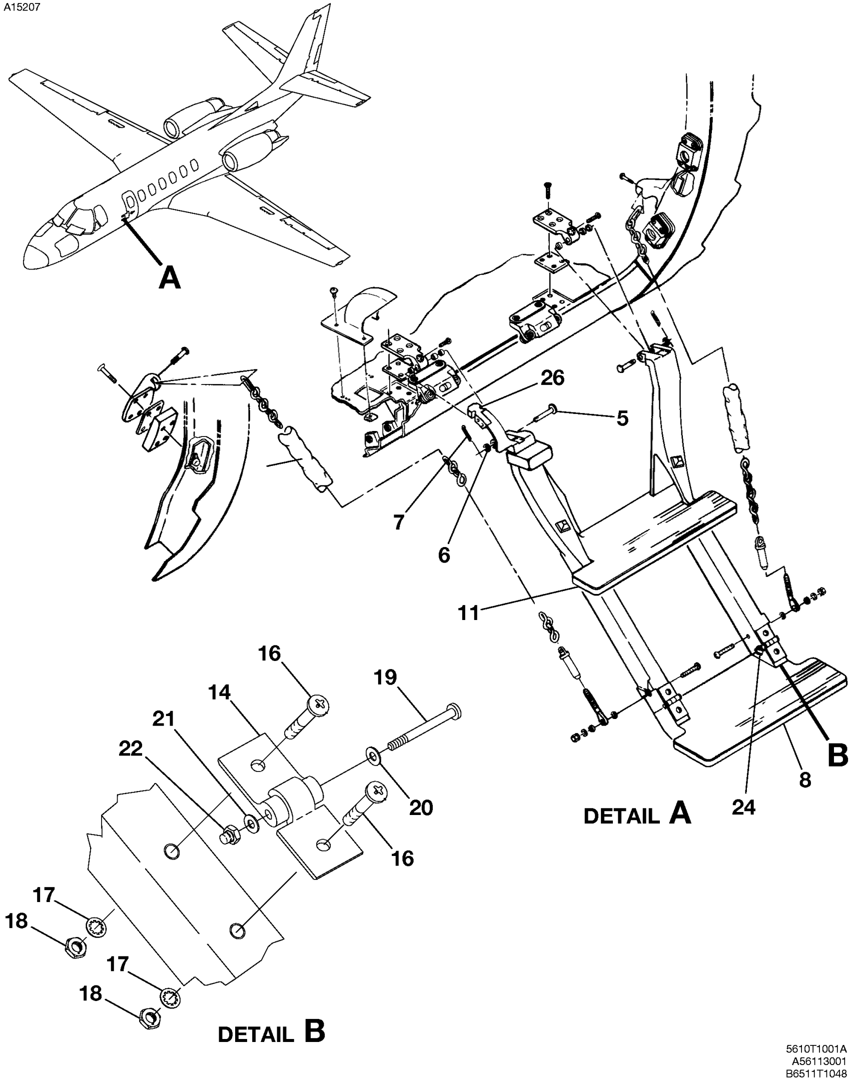

CABIN DOOR STEP
FIGURE 01 (SHEET 1)

FIG ITEM	PART NUMBER	NOMENCLATURE 1 2 3 4 5 6 7				UNITS PER ASSY
01						
-		CABIN DOOR STEP REFER TO NOTE 1		0001	0400	RF
				0442	0774	
- 1	6519009-52	. STEP ASSY FSO 6519009-71		0001	0201	NP
				0206	0269	
- 2	6519009-62	. STEP ASSY FSO 6519009-71		0202	0205	NP
- 3	6519009-64	. STEP ASSY FSO 6519009-71		0270	0400	NP
- 4	6519009-67	. STEP ASSY FSO 6519009-71		0442	0527	01
- 4A	6519009-71	. STEP ASSY		0528	0774	01
		ATTACHING PARTS				
5	MS20392-3C51	. PIN				02
6	NAS1149F0463P	. WASHER				02
7	MS24665-208	. COTTER PIN				02
		—*—				
8	6519009-54	. . STEP-LOWER ASSY		0001	0201	01
				0206	0269	
- 9	6519009-61	. . STEP-LOWER		0202	0205	01
				0270	0400	
				0442	0774	
- 10	CM2692-28J4S	. . . PLUG BUTTON		0001	0201	03
				0206	0400	
				0442	0774	
11	6519009-53	. . STEP-UPPER ASSY		0001	0269	01
- 12	6319040-1	. . STEP-UPPER ASSY		0270	0400	01
- 13	CM2692-24J2S	. . . PLUG BUTTON				06
14	6519009-55	. . HINGE ASSY-FSO 6519009-70				NP
- 15	6519009-70	. . HINGE ASSY				02
		ATTACHING PARTS				
16	MS27039-4-25	. . SCREW				02
17	MS35333-40	. . WASHER-LOCK				02
18	AN316-4R	. . NUT				02
		—*—				
19	6519009-65	. . . SCREW				01
20	NAS1149F0332P	. . . WASHER				01
21	NAS1149F0363P	. . . WASHER				01
22	S1914-7	. . . NUT				01
- 23	SJ5012	. . CYLINDRICAL STOP FSO 6519009-11	V28218	0001	0067	NP
24	6519009-11	. . STOP FSO 6519009-66		0068	0400	NP
- 25	6519009-66	. . STOP		0068	0400	01
				0442	0774	
26	5511244-67	. . DETENT				01

NOTE 1—REFER TO 52-60-00 FIGURE 03 FOR AIRPLANES -0260 THRU -0774 INCORPORATING SB560-52-17.

- ITEM NOT ILLUSTRATED

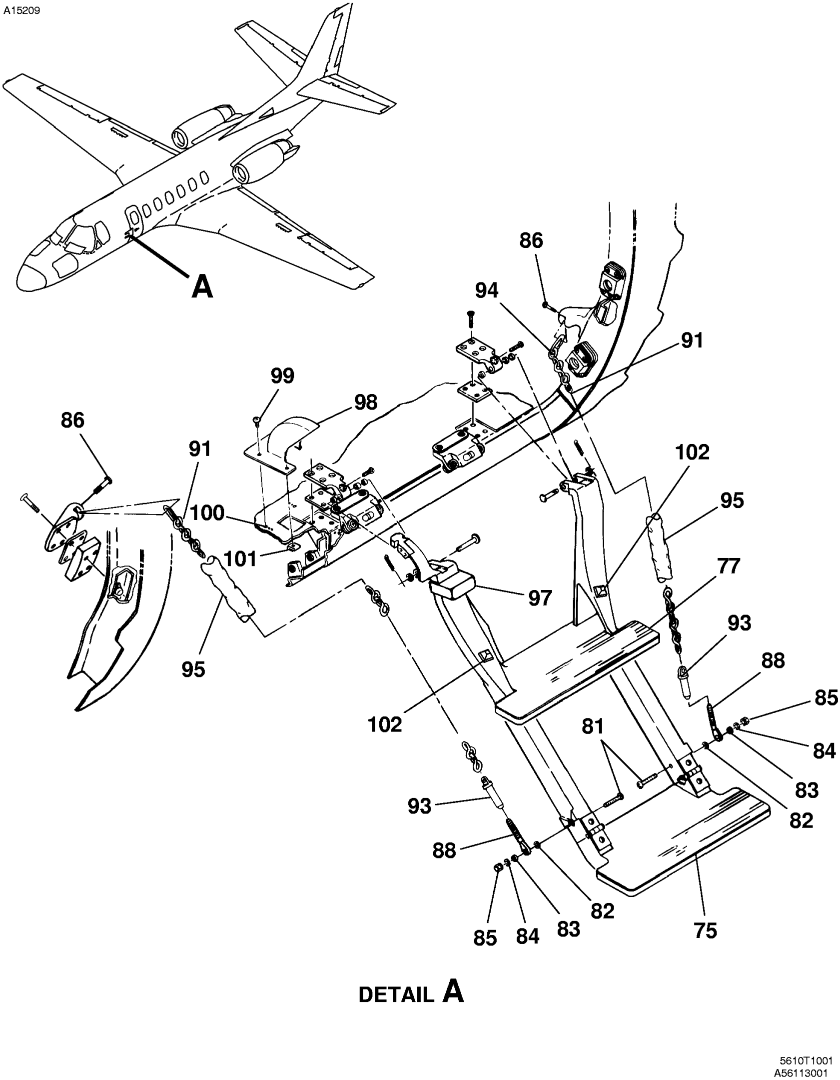

CABIN DOOR STEP
FIGURE 01 (SHEET 2)

FIG ITEM	PART NUMBER	NOMENCLATURE 1 2 3 4 5 6 7				UNITS PER ASSY
01						
75	6519010-9	. STEP MAT-LOWER		0001	0400	01
- 76	4819719-3	. LOWER STEP MAT		0442	0774	01
77	6519010-10	. STEP MAT-UPPER		0001	0269	01
- 78	4711090-5	. STEP MAT - UPPER		0270	0400	01
				0442	0774	
- 79	6519009-30	. STEP SUPPORT ASSY		0001	0400	02
- 80	4819717-1	. SUPPORT ASSY-STEP		0442	0774	02
		ATTACHING PARTS				
81	NAS623-4-21	. SCREW				01
82	NAS1149F0463P	. WASHER				01
83	NAS43HT4-17	. SPACER				01
84	NAS1149F0432P	. WASHER				01
85	MS21042-4	. NUT				01
86	MS27039-4-20	. SCREW		0001	0400	01
- 87	MS27039-4-17	. SCREW		0442	0774	01
		—*—				
88	6519009-9	. . EYE BOLT ASSY				01
- 89	6519009-27	. . CHAIN ASSY		0001	0400	01
- 90	4819717-2	. . CHAIN ASSY		0442	0774	01
91	6519009-28	. . . CHAIN		0001	0400	01
- 92	4819717-3	. . . CHAIN		0442	0774	01
93	6519009-29	. . . FITTING				01
94	5511244-75	. . . LINK-FSO 6719545-3				NP R
- 94A	6719545-3	. . . PANEL LF AFT PSU PANEL FOR SPARES ONLY				01 R
95	5514706-127	. COVER ASSY-DOOR STEP CHAIN		0001	0400	02
- 96	4819719-4	. COVER ASSY-DOOR STEP CHAIN		0442	0774	02
97	5511252-2	. BUMPER-CABIN DOOR		0001	0400	01
				0442	0486	
98	6319037-2	. COVER-STEP CATCH FSO 6319037-200 REFER TO NOTE 1		0218	0400	NP
				0442	0774	
- 98A	6319037-200	. COVER-STEP CATCH		0218	0400	01
				0442	0774	
		ATTACHING PARTS				
99	MS35206-244	. SCREW		0218	0400	03
100	MS21071L08	. NUTPLATE		0218	0400	02
101	S1477-08	. NUT-CLIP		0218	0400	01
		—*—				
102	15985	. BUMPER-CABIN DOOR STEP FSO SJ5023	V70655	0001	0400	NP
- 103	SJ5023	. BUMPER-CABIN DOOR STEP	V26066	0442	0774	02

NOTE 1—AIRPLANES -0218 THRU -0400 AND AIRPLANES -0001 THRU -0217 INCORPORATING SB560-52-02.

- ITEM NOT ILLUSTRATED

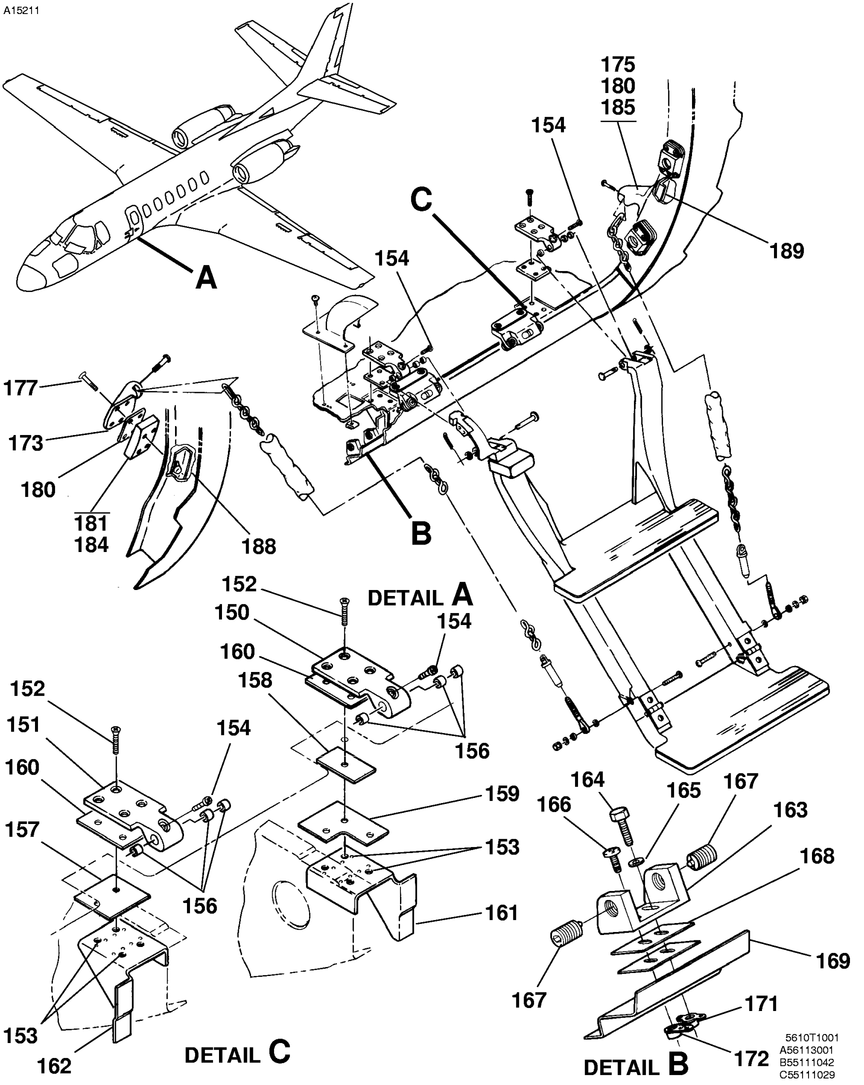

CABIN DOOR STEP
FIGURE 01 (SHEET 3)

FIG ITEM	PART NUMBER	NOMENCLATURE 1 2 3 4 5 6 7			UNITS PER ASSY
01					
150	5511244-44	. HINGE ASSY-AFT-REFER TO NOTE 1			01
151	5511244-45	. HINGE ASSY FWD-REFER TO NOTE 2	0442	0486	01
		ATTACHING PARTS			
152	MS24694-S49	. SCREW			04
153	MS21073L3	. NUTPLATE			04
154	MS24694-S102	. SCREW			01
- 155	MS21073L4	. NUTPLATE			01
		—*—			
156	S1003-9A	. . BEARING			03
157	5511244-49	. SHIM FWD	0442	0486	01
158	5511244-50	. SHIM AFT	0442	0486	01
159	5511244-51	. SHIM AFT	0442	0486	01
160	5511244-63	. SHIM	0442	0486	02
161	5511244-16	. BRACKET-AFT			01
162	6519009-22	. BRACKET-FORWARD FSO 6519009-72 AND 6519009-73			NP
163	5511244-68	. DETENT LATCH	0442	0486	01
		ATTACHING PARTS			
164	AN4-5A	. BOLT			01
165	NAS1149F0432P	. WASHER			01
166	MS27039-1-06	. SCREW			01
		—*—			
167	CL71SPS1	. SPRING PLUNGER			02
168	5511244-69	. SHIM	0442	0486	AR
169	6519009-23	. BRACKET ASSY-STOP	0001	0400	01
- 170	6519009-60	. BRACKET ASSY-STOP	0442	0774	01
171	MS21069L4	. . NUTPLATE			01
172	MS21072L3	. . NUTPLATE			01
173	5511244-88	. FITTING-FWD	0001	0400	01
			0620	0636	
- 174	6519498-17	. SUPPORT-FWD CABLE	0401	0619	01
			0637	0774	
175	5511244-87	. FITTING-AFT	0001	0400	01
			0620	0636	
- 176	6519498-18	. SUPPORT-AFT CABLE	0401	0619	01
			0637	0774	
		ATTACHING PARTS			
177	MS27039-1-14	. SCREW USE ON FWD & AFT FITTING	0002	0205	08
- 178	MS27039-1-14	. SCREW USE ON FWD FITTING	0206	0400	04
			0442	0774	
- 179	MS27039-1-20	. SCREW USE ON AFT FITTING	0206	0400	04
			0442	0774	
		—*—			
180	6519009-18	. INSULATOR-FORWARD & AFT			02
181	5511244-19	. BLOCK-FORWARD & AFT	0002	0053	02
- 182	5511244-89	. FITTING SPACER-FWD-FSO 5511244-91	0206	0255	NP
- 183	5511244-91	. FITTING SPACER-FWD	0256	0400	01
184	6519009-18	. INSULATOR-FORWARD	0054	0400	01
			0442	0774	
185	5511244-19	. BLOCK-AFT	0002	0205	01
- 186	5511244-90	. FITTING SPACER-AFT-FSO 5511244-92	0206	0255	NP
- 187	5511244-92	. FITTING SPACER-AFT	0256	0400	01
188	5511244-37	. ANGLE-FORWARD	0001	0400	01
189	5511244-38	. ANGLE-AFT	0001	0400	01

NOTE 1—AIRPLANES -0001 THRU -0400 INCORPORATING SB560-52-08.

NOTE 2—AIRPLANES -0442 THRU -0486 AND AIRPLANES -0001 THRU -0400 INCORPORATING SB560-52-08.

- ITEM NOT ILLUSTRATED

A15212

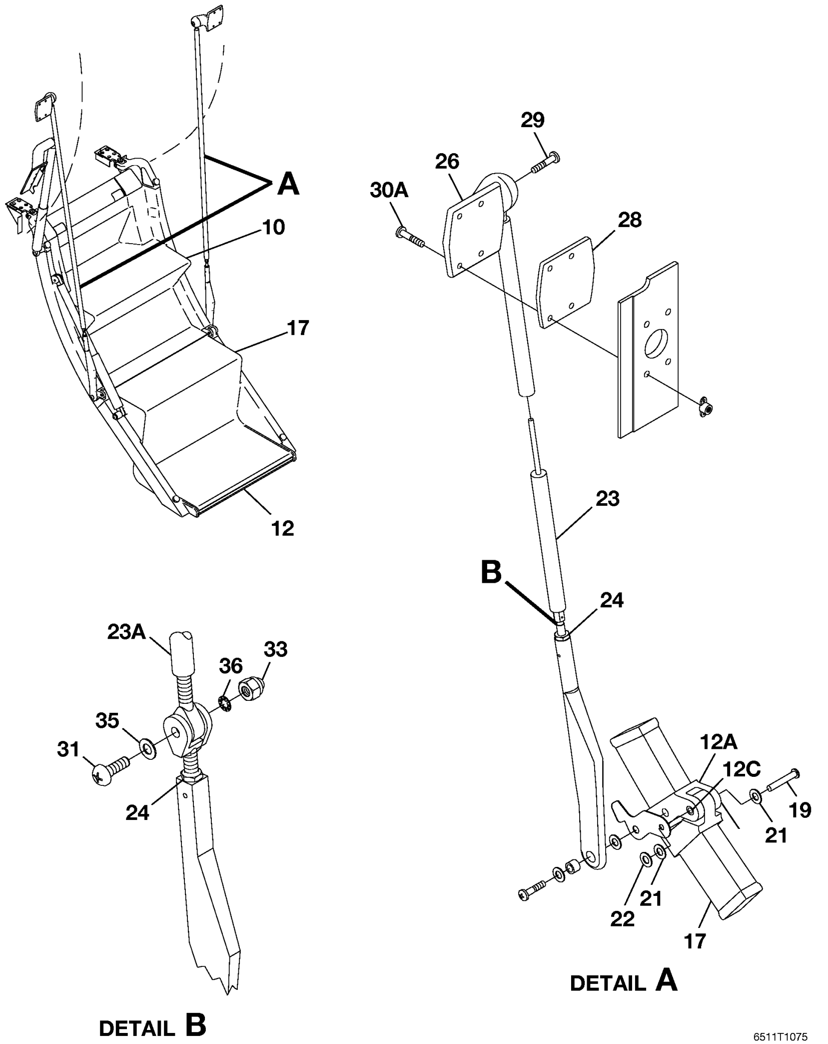

6511T1075
A6511T1076
B5611T1100

COMPOSITE DOOR STEP INSTALLATION
FIGURE 02 (SHEET 1)

FIG ITEM	PART NUMBER	NOMENCLATURE 1 2 3 4 5 6 7			UNITS PER ASSY
02					
-		COMPOSITE DOOR STEP INSTALLATION REFER TO NOTE 6 AND NOTE 7	0401	0774	RF
- 1	6519519-1	. STEP ASSY-CABIN DOOR FSO 6519525-1 OR 6519581-1	0401	0411	NP
- 2	6519496-1	. STEP ASSY-CABIN DOOR ALT FOR 6519519-1	0401	0411	01
- 3	6519525-1	. STEP ASSEMBLY-CABIN DOOR FSO 6519525-2 OR 6519581-1	0084 0412	0084 0465	01
- 4	6519525-2	. STEP ASSEMBLY-CABIN DOOR FSO 6519581-1	0226 0466	0226 0542	01
- 5	6590336-1	. DOOR STEP ASSY-CABIN DOOR FSO 6519581-1	0543	0560	NP
- 6	6519581-1	. STEP ASSY-CABIN DOOR FSO 4717238-2	0561	0774	NP
- 6A	4717238-2	. ENTRY STEP ASSY-CABIN DOOR	0561	0774	01
- 6B	6519581-200	. STEP ASSY-CABIN DOOR FOR SPARES ONLY	0401	0774	01 R
- 7	6519519-2	. . UPPER STEP BOND ASSY FSO 6519583-1.	0084 0401	0084 0465	NP
- 7A	6519496-2	. . UPPER STEP BOND ASSY ALT FOR 6519519-2.	0401	0465	NP
- 8	6519519-33	. . UPPER STEP BOND ASSY FSO 6519583-1.	0226 0466	0226 0560	NP
- 9	6590336-3	. . UPR DOOR STEP BND A-MOD FSO 6519583-1	0543	0560	NP
10	6519583-1	. . UPPER STEP BOND ASSY.	0561	0774	01
- 11	6519519-31	. . . DRAIN TUBE REFER TO NOTE 2	0466	0560	04
12	6519519-32	. . . FINGER PULL REFER TO NOTE 2	0466	0774	01
12A	6519519-18	. . . HINGE FITTING ASSY-FWD MIDDLE			01
- 12B	6519519-19	. . . HINGE FITTING ASSY-AFT MIDDLE			01
12C	NAS75-3-008	. . . . BUSHING			02
- 13	6590304-1	. . LWR STEP BOND ASSY FSO 6519583-2	0401	0411	NP
- 13A	6519496-3	. . LOWER STEP BOND ASSY ALT FOR 6590304-1	0401	0411	NP
- 14	6519519-27	. . LOWER STEP BOND ASSY FSO 6519583-2	0084 0412	0084 0465	NP
- 15	6519519-34	. . LOWER STEP BOND ASSY FSO 6519583-2	0226 0466	0226 0560	NP
- 16	6590336-2	. . LWR DOOR STEP BND A-MOD FSO 6519583-2	0543	0560	NP
17	6519583-2	. . LOWER STEP BOND ASSY	0561	0774	01
- 18	6519519-31	. . . DRAIN TUBE REFER TO NOTE 1	0466	0560	02
19	6519498-46	. . . PIN-HINGE REFER TO NOTE 2	0401	0503	02
- 20	6519498-50	. . . PIN-HINGE REFER TO NOTE 3	0504	0774	02
21	NAS1149F0316P	. . WASHER REFER TO NOTE 2	0401	0411	04
- 21A	NAS1149F0316P	. . WASHER REFER TO NOTE 3	0504	0774	02
22	MS16633-4018	. . RING			02
23	S2837-5	. CABLE ASSY-FORWARD AND AFT REFER TO NOTE 4	0401	0619	02
23A	S2814-4	. CABLE ASSY-FORWARD AND AFT REFER TO NOTE 5	0620	0774	02
24	AN316-4R	. NUT			02
- 25	MS21252-5RS	. CLEVIS END TURNBUCKLE USED WITH S2814-4 CABLE ASSY REFER TO NOTE 5.	0620	0774	02
26	6519498-17	. CABLE SUPPORT-FORWARD-UPPER	0401	0619	01
- 26A	5511244-88	. FITTING-FWD	0620	0774	01
- 27	6519498-18	. CABLE SUPPORT-AFT UPPER	0401	0619	01
- 27A	5511244-87	. FITTING-AFT	0620	0774	01
28	6519009-18	. INSULATOR-FORWARD AND AFT			02
29	MS27039-4-17	. SCREW-UPPER FORWARD AND AFT	0401	0503	AR
- 30	MS27039-1-14	. SCREW-FORWARD SUPPORT REFER TO NOTE 2	0401	0503	08
30A	MS27039-1-23	. SCREW-FORWARD SUPPORT REFER TO NOTE 3	0561	0659	04
- 30B	MS27039-1-19	. SCREW-FORWARD SUPPORT REFER TO NOTE 3	0660	0774	04
- 30C	MS27039-1-32	. SCREW-AFT SUPPORT REFER TO NOTE 3	0561	0659	04
- 30D	MS27039-1-26	. SCREW-AFT SUPPORT REFER TO NOTE 3	0660	0774	04
31	MS27039-4-11	. SCREW	0620	0633	02
- 32	AN525-10R6	. SCREW-REFER TO NOTE 5	0634	0774	02
33	NAS1329C3-80	. BLIND NUT-REFER TO NOTE 5	0634	0774	02
- 34	AA55629-65	. CAP NUT	0561	0774	02
35	NAS1149F0463P	. WASHER-REFER TO NOTE 5	0561	0774	02
36	MS35333-40	. WASHER-LOCK-FLAT-REFER TO NOTE 5	0561	0774	02

NOTE 1—AIRPLANES -0226, -0466 AND ON AND AIRPLANES -0401 THRU -0445 INCORPORATING SB560-52-09.

NOTE 2—AIRPLANES -0084, -0401 THRU -0503 NOT INCORPORATING SB560-52-11.

NOTE 3—AIRPLANES -0504 AND ON AND AIRPLANES -0084 AND -0401 THRU -0503 INCORPORATING SB560-52-11.

NOTE 4—AIRPLANES -0401 THRU -0619 NOT INCORPORATING SB560-52-15.

NOTE 5—AIRPLANES -0620 AND ON AND AIRPLANES -0401 THRU -0619 INCORPORATING SB560-52-15.

NOTE 6—AIRPLANES -0401 AND ON AND AIRPLANES -0001 THRU -0400 INCORPORATING SB560-52-08.

NOTE 7—REFER TO 52-60-00 FIGURE 03 FOR AIRPLANES -0260 THRU -0774 INCORPORATING SB560-52-17.

- ITEM NOT ILLUSTRATED

A3111

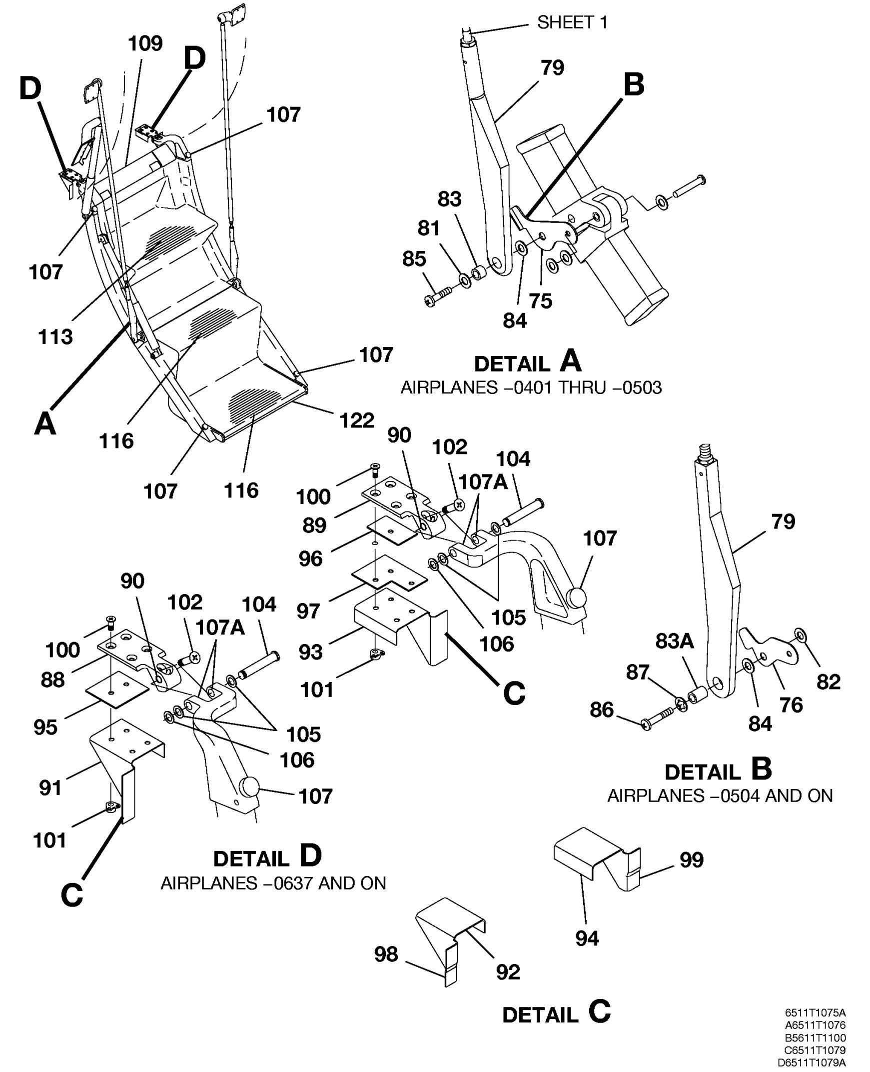

COMPOSITE DOOR STEP INSTALLATION
FIGURE 02 (SHEET 2)

FIG ITEM	PART NUMBER	NOMENCLATURE 1 2 3 4 5 6 7				UNITS PER ASSY
02						
75	6519498-45	. CLIP-LOWER FORWARD REFER TO NOTE 2		0401	0503	01
76	6519498-48	. CLIP-LOWER FORWARD REFER TO NOTE 3		0504	0774	01
- 77	6519498-44	. CLIP-LOWER AFT REFER TO NOTE 2		0401	0503	01
- 78	6519498-49	. CLIP-LOWER AFT REFER TO NOTE 3		0504	0774	01
79	6519498-32	. CABLE END ASSY-FWD				01
- 80	6519498-33	. CABLE END ASSY-AFT				01
81	NAS1149F0432P	. WASHER-LOWER FORWARD AFT REFER TO NOTE 3		0401	0503	AR
82	NAS1149F0463P	. WASHER-LOWER FORWARD AFT		0504	0774	02
83	NAS43HT4-19	. SPACER-LOWER FORWARD AFT		0401	0542	04
83A	NAS43HT4-22	. SPACER-LOWER FORWARD AFT REFER TO NOTE 4		0543	0774	03
84	NAS1149F0632P	. WASHER-LOWER FORWARD		0504	0774	01
85	MS27039-4-13	. SCREW-LOWER FORWARD AND AFT		0401	0503	02
86	MS27039-4-15	. SCREW-LOWER FORWARD AND AFT		0504	0542	02
- 86A	MS27039-4-16	. SCREW-LOWER FORWARD AND AFT		0543	0774	02
87	MS35333-40	. WASHER-LOCK-FLAT-REFER TO NOTE 4		0504	0633	02
88	6511298-1	. HINGE ASSY - FWD-REFER TO NOTE 6				01
89	6511298-2	. HINGE ASSY - AFT-REFER TO NOTE 6				01
90	S1003-9A	. . BEARING USED WITH FORWARD AND AFT HINGE				04
91	6519009-22	. BRACKET-FORWARD FSO 6519009-72 AND 6519009-73		0401	0636	NP
92	6519009-73	. BRACKET-FORWARD		0637	0774	01
93	5511244-16	. BRACKET-AFT		0401	0636	01
94	5511244-98	. BRACKET-AFT		0637	0774	01
95	5511244-49	. SHIM FWD				01
96	5511244-50	. SHIM AFT				01
97	5511244-51	. SHIM AFT				01
98	6519009-72	. CLIP-FORWARD		0637	0774	01
99	5511244-97	. CLIP-AFT		0637	0774	01
100	MS24694-S49	. SCREW				08
101	MS21073L3	. NUTPLATE				08
102	MS24694-S102	. SCREW				02
- 103	MS21069L4	. NUTPLATE				02
104	6519496-16	. HINGE PIN, UPPER				02
- 104A	MS20392-3C53	. PIN		0312	0706	02
105	NAS1149F0432P	. WASHER				02
106	MS16624-1025	. RING-EXTERNAL				02
- 106A	MS24665-208	. COTTER PIN		0312	0706	02
107	SJ5023	. BUMPER	V26066	0504	0774	06
107A	6519519-26	. BEARING				04
- 108	4819448-4	. CLOSEOUT COVER STANDARD DOOR STEP REFER TO NOTE 1		0401	0503	NP
109	4819448-12	. CLOSEOUT COVER STANDARD DOOR STEP FSO 4819448-13 REFER TO NOTE 1		0504	0577	NP
- 110	4819448-13	. STEP MAT - UPPER COVER REFER TO NOTE 1		0578	0643	01
- 111	4819448-3	. STEP MAT-UPPER REFER TO NOTE 5		0401	0465	NP
- 112	4819448-8	. STEP MAT-UPPER REFER TO NOTE 5		0466	0503	NP
113	4819448-11	. STEP MAT-UPPER FSO 4819448-13 REFER TO NOTE 1		0504	0577	NP
- 113A	4819448-13	. STEP MAT - UPPER		0578	0643	01
- 113B	6519692-7	. STEP MAT-UPPER-TAUPE		0644	0774	01
- 114	4819448-2	. STEP MAT-LOWER REFER TO NOTE 5		0401	0465	NP
- 115	4819448-7	. STEP MAT-LOWER REFER TO NOTE 5		0466	0503	NP
116	4819448-10	. STEP MAT-LOWER REFER TO NOTE 1		0504	0643	NP
- 116A	6519692-4	. STEP MAT-LOWER REFER TO NOTE 1 TAUPE		0644	0774	01
- 117	4899660-1TA	. . STEP MAT-TAUPE		0401	0643	AR
- 118	4899660-1GR	. . STEP MAT-GRAY		0401	0643	AR
- 119	4899660-1BL	. . STEP MAT-BLACK		0401	0643	AR
- 120	4899660-1BB	. . STEP MAT-BROWN		0401	0643	AR
- 121	4899660-1BE	. . STEP MAT-BEIGE		0401	0643	AR
122	4819448-5	. TRIM		0401	0643	01
- 123	6519692-7	. STEP MAT-UPPER-TAUPE		0644	0774	01
- 124	6519692-4	. STEP MAT-LOWER-TAUPE		0644	0774	01
- 125	6519692-8	. STEP MAT-UPPER-BEIGE		0644	0774	01
- 126	6519692-5	. STEP MAT-LOWER-BEIGE		0644	0774	01
- 127	6519692-9	. STEP MAT-UPPER-GREY		0644	0774	01
- 128	6519692-6	. STEP MAT-LOWER-GREY		0644	0774	01

NOTE 1—WHEN REPLACING THIS PART, PROVIDE AIRPLANE MODEL AND SERIAL NUMBER TO INSURE CORRECT MATCHING COLOR.

NOTE 2—AIRPLANES 0084, AND -0401 THRU -0503 NOT INCORPORATING SB560-52-11.

NOTE 3—AIRPLANES -0504 AND ON AND AIRPLANES -0084, AND -0401 THRU -0503 INCORPORATING SB560-52-11.

NOTE 4—AIRPLANES -0543 AND ON AND AIRPLANES -0084, -0226, -0401 THRU -0542 INCORPORATING SB560-52-14.

NOTE 5—WHEN REPLACING, ORDER 4899660-200 BLACK, 4899660-201 TAUPE, OR 4899660-202 BEIGE FOR COLOR MATCH.

NOTE 6—AIRPLANES -0001 THRU -0400 INCORPORATING SB560-52-08.

- ITEM NOT ILLUSTRATED

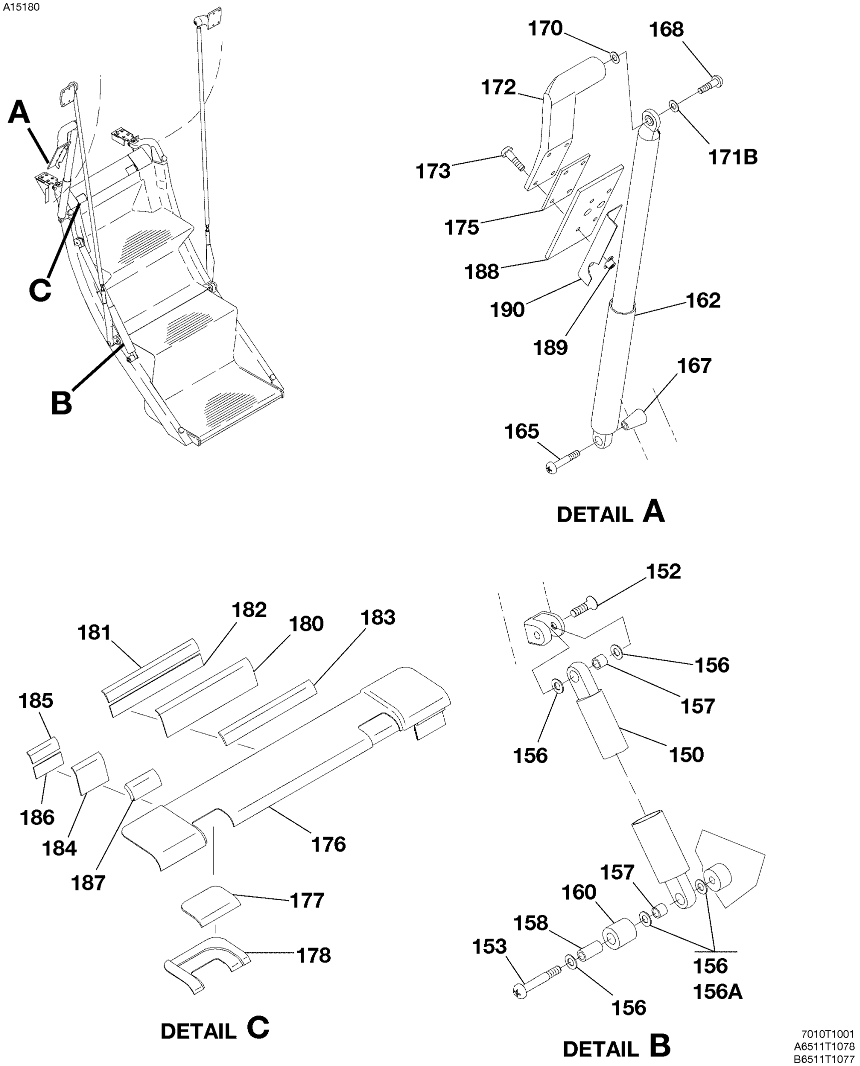

COMPOSITE DOOR STEP INSTALLATION
FIGURE 02 (SHEET 3)

FIG ITEM	PART NUMBER	NOMENCLATURE 1 2 3 4 5 6 7			UNITS PER ASSY
02					
150	6519497-2	. RATE CONTROL-LOWER REFER TO NOTE 1	0401 0505	0437 0560	01
- 151	6519497-4	. RATE CONTROL-LOWER REFER TO NOTE 1 ATTACHING PARTS	0438	0560	01
152	MS24694-S100	. SCREW-UPPER			01
153	MS27039-4-23	. SCREW-LOWER REFER TO NOTE 4	0401	0503	01
- 154	MS27039-4-27	. SCREW-LOWER REFER TO NOTE 5	0504 0561	0542 0774	01
- 154A	MS27039-4-45	. SCREW-LOWER REFER TO NOTE 7	0543	0560	01
- 155	MS35333-40	. WASHER-LOCK-FLAT REFER TO NOTE 5	0504	0774	01
156	NAS1149F0432P	. WASHER-UPPER AND LOWER			AR
156A	NAS1149F0632P	. WASHER-UPPER AND LOWER REFER TO NOTE 9 AND NOTE 10			02
157	NAS43HT4-19	. SPACER-UPPER AND LOWER REFER TO NOTE 6	0401	0542	02
- 157A	NAS43HT4-22	. SPACER-LOWER REFER TO NOTE 7	0543	0560	02
158	NAS75-4-019	. BUSHING-LOWER REFER TO NOTE 4 AND NOTE 6	0401	0503	01
- 159	NAS75-4-027	. BUSHING-LOWER REFER TO NOTE 5 AND NOTE 7	0504	0774	01
160	6519498-27	. BUMPER-LOWER REFER TO NOTE 4	0401	0503	01
- 161	6519498-47	. BUMPER-LOWER REFER TO NOTE 5 —*—	0504	0774	01
162	6519497-3	. RATE CONTROL-UPPER REFER TO NOTES 1 AND 2 FSO 6519497-6	0401	0437	NP
- 163	6519497-5	. RATE CONTROL-UPPER REFER TO NOTE 1 AND NOTE 3	0438	0504	01
- 164	6519497-6	. RATE CONTROL-UPPER REFER TO NOTE 1	0505	0560	01
165	MS27039-4-26	. SCREW-LOWER REFER TO NOTE 6	0401	0503	01
- 166	MS27039-4-27	. SCREW-LOWER REFER TO NOTE 6	0504	0542	01
- 166A	MS27039-4-37	. SCREW-LOWER REFER TO NOTE 7	0543	0560	01
167	6519498-31	. SPACER CONE-LOWER			01
- 167A	AA55629-65	. CAP NUT	0543	0774	01
168	MS27039-4-14	. SCREW-UPPER	0401	0503	01
- 169	MS27039-4-15	. SCREW-UPPER	0504	0774	01
170	NAS1149F0432P	. WASHER-UPPER			01
- 171	MS35333-40	. WASHER, LOCK, FLAT-UPPER AND LOWER LOCK REFER TO NOTE 6	0504	0542	02
- 171A	MS35333-40	. WASHER, LOCK, FLAT-UPPER AND LOWER LOCK REFER TO NOTE 7	0543	0633	03
171B	MS35333-40	. WASHER-LOCK-FLAT UPPER AND LOWER LOCK REFER TO NOTE 7 AND NOTE 9	0634	0774	04
172	6519498-28	. RATE CONTROL SUPT ASSY	0401	0619	01
- 172A	6519677-1	. RATE CONTROL SUPPT ASSY REFER TO NOTE 8 ATTACHING PARTS	0620	0774	01
173	MS27039-1-14	. SCREW	0401	0503	04
- 174	MS27039-1-23	. SCREW —*—	0504	0774	04
175	6519009-18	. INSULATOR-FORWARD AND AFT			01
- 175A	SJ5023	. BUMPER V26066			06
176	6519520-2	. THRESHOLD CLOSEOUT ASSY	0260	& ON	01
177	6519520-4	. . WINDOW-INSPECTION	0260	& ON	02
178	6519520-5	. . WINDOW FRAME, FWD	0260	& ON	01
- 179	6519520-6	. . WINDOW FRAME, AFT	0260	& ON	01
180	6519520-7	. CENTER STRIP HINGE	0260	& ON	01
181	6519520-9	. CENTER BACKUP STRIP-UPPER	0260	& ON	01
182	6519520-11	. CENTER BACKUP STRIP-LOWER	0260	& ON	01
183	6519520-13	. CENTER SPACER	0260	& ON	01
184	6519520-8	. OUTBOARD STRIP HINGE	0260	& ON	02
185	6519520-10	. OUTBOARD BACKUP STRIP-UPPER	0260	& ON	02
186	6519520-12	. OUTBOARD BACKUP STRIP-LOWER	0260	& ON	02
187	6519520-14	. OUTBOARD SPACER	0260	& ON	02
188	5511244-91	. FITTING SPACER-FWD			01
189	MS21069L3	. . NUTPLATE			04
190	5511244-37	. ANGLE			01

NOTE 1—WHEN ORDERING THIS PART, ALSO PROVIDE AIRPLANE MODEL AND SERIAL NUMBER.

NOTE 2—AIRPLANES -0401 THRU -0437 NOT INCORPORATING SB560-52-10.

NOTE 3—AIRPLANES -0438 THRU -0504 AND AIRPLANES -0401 THRU -0437 INCORPORATING SB560-52-10.

NOTE 4—AIRPLANES -0401 THRU -0503 AND AIRPLANES -0084 NOT INCORPORATING SB560-52-11.

NOTE 5—AIRPLANES -0504 AND ON AND AIRPLANES -0401 THRU -0503 AND AIRPLANES -0084 INCORPORATING SB560-52-11.

NOTE 6—AIRPLANES -0401 THRU -0542 NOT INCORPORATING SB560-52-14.

NOTE 7—AIRPLANES -0543 AND ON AND AIRPLANES -0084, -0226, AND -0401 THRU -0542 INCORPORATING SB560-52-14.

NOTE 8—AIRPLANES -0620 AND ON AND AIRPLANES -0401 THRU -0619 INCORPORATING SB560-52-15.

NOTE 9—AIRPLANES -0634 THRU -0774 AND AIRPLANES -0001 THRU -0400 INCORPORATING SB560-52-08.

NOTE 10—AIRPLANES -0001 THRU -0400 INCORPORATING SB560-52-08.

- ITEM NOT ILLUSTRATED

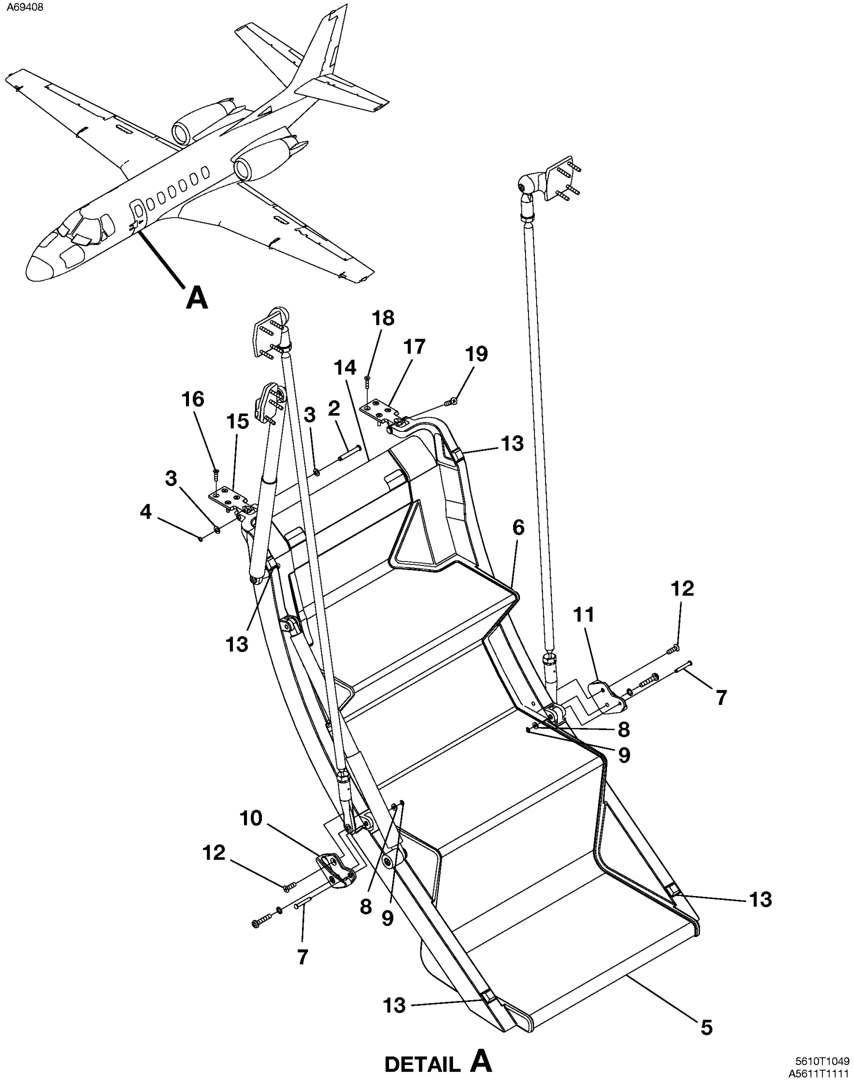

COMPOSITE DOOR STEP INSTALLATION
FIGURE 03 (SHEET 1)

FIG ITEM	PART NUMBER	NOMENCLATURE 1 2 3 4 5 6 7				UNITS PER ASSY
03						
-		COMPOSITE DOOR STEP INSTALLATION -REFER TO NOTE 3		0775	& ON	RF
- 1	4717238-4	. ENTRY STEP ASSY				01
		ATTACHING PARTS				
2	6519496-16	. HINGE PIN-UPPER				02
- 2A	MS24665-208	. COTTER PIN-UPPER		0775	0801	02 R
3	NAS1149F0432P	. WASHER				02
4	MS16624-1025	. RING				02
- 4A	MS20392-3C53	. PIN		0775	0801	02 R
		—*—				
5	6519583-2	. . LOWER STEP BOND ASSY				01
6	6519583-1	. . UPPER STEP BOND ASSY				01
7	4717238-7	. . HINGE PIN FSO 4717238-23				NP
- 7A	4717238-23	. . HINGE PIN REFER TO NOTE 2				02
8	NAS1149F0363P	. . WASHER REFER TO NOTE 1				02
9	MS16633-4018	. . RING				02
- 9A	MS3215-4018	. . RING REFER TO NOTE 2				02
10	4717238-5	. . ATTACH FITTING - FWD REFER TO NOTE 1				01
11	4717238-6	. . ATTACH FITTING - AFT REFER TO NOTE 1				01
		ATTACHING PARTS				
12	MS24694-S99	. . SCREW REFER TO NOTE 1				01
- 12A	NAS1330H4K331L	. . NUT REFER TO NOTE 1				01
		—*—				
13	SJ5023	. BUMPER	V26066			08
14	6519520-2	. THRESHOLD CLOSEOUT ASSY				01
15	6511298-1	. HINGE ASSY - FWD				01
		ATTACHING PARTS				
16	MS24694-S53	. SCREW				04
		—*—				
17	6511298-2	. HINGE ASSY - AFT				01
		ATTACHING PARTS				
18	MS24694-S54	. SCREW				04
		—*—				
19	MS24694-S102	. SCREW				02

NOTE 1—AIRPLANES -0775 AND ON AND AIRPLANES -0260 THRU -0774 INCORPORATING SB560-52-17.

NOTE 2—AIRPLANES -260 THRU -0774 INCORPORATING SB560-52-17.

NOTE 3—AIRPLANES -0775 AND ON AND AIRPLANES -0001 THRU -0400 INCORPORATING SB560-52-08.

- ITEM NOT ILLUSTRATED

A69409

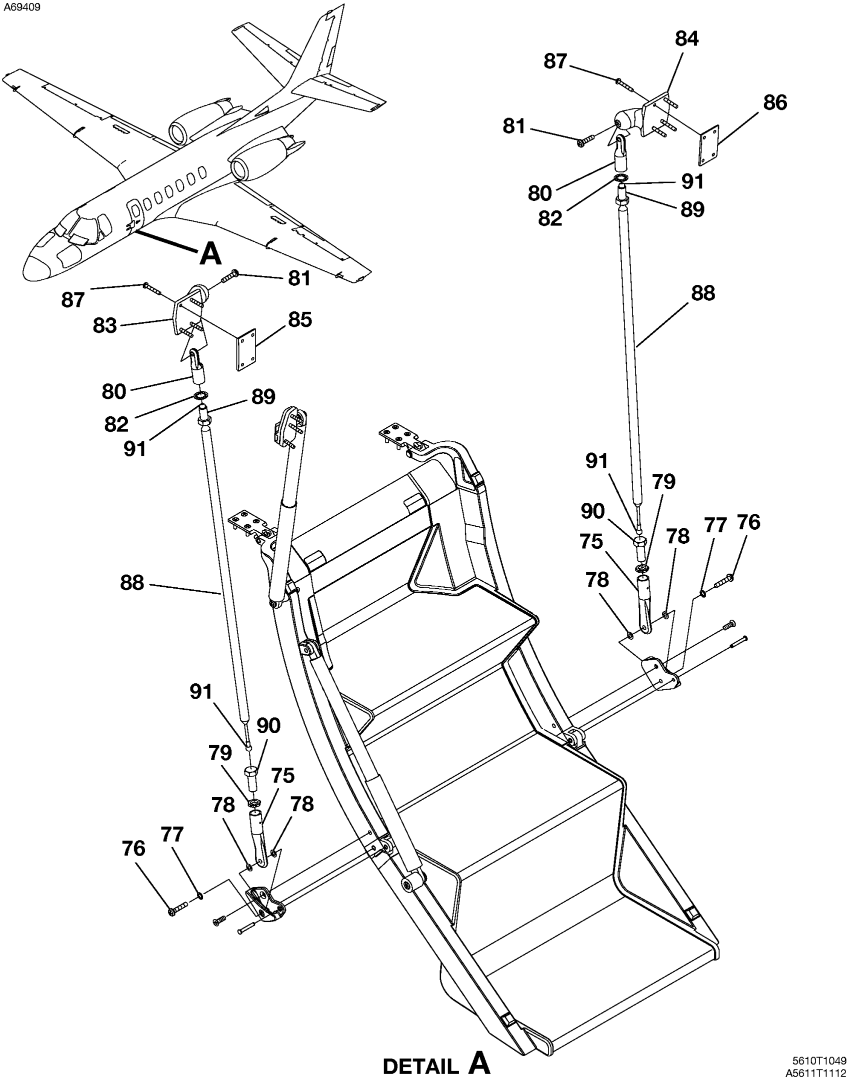

DETAIL A

COMPOSITE DOOR STEP INSTALLATION
FIGURE 03 (SHEET 2)

FIG ITEM	PART NUMBER	NOMENCLATURE 1 2 3 4 5 6 7	UNITS PER ASSY
03			
75	4717238-19	. LOWER FITTING REFER TO NOTE 1	02
		ATTACHING PARTS	
76	MS27039-4-17	. SCREW REFER TO NOTE 1	01
77	MS35333-40	. WASHER-LOCK REFER TO NOTE 1	01
78	NAS1149F0416P	. WASHER REFER TO NOTE 1	02
- 78A	NAS43HT4-16	. SPACER REFER TO NOTE 2	01
		—*—	
79	NAS1423C8	. NUT REFER TO NOTE 1	02
80	4717238-13	. UPPER FITTING REFER TO NOTE 1.	02
		ATTACHING PARTS	
81	MS27039-4-17	. SCREW	01
		—*—	
82	MS35333-78	. WASHER-LOCK REFER TO NOTE 1	02
83	6519498-17	. CABLE SUPPORT-FWD	01
84	6519498-18	. CABLE SUPPORT-AFT	01
85	4719074-3	. ISOLATOR-FWD	01
86	4719074-2	. ISOLATOR-AFT	01
87	MS27039-1-20	. SCREW	04
88	4717238-12	. CABLE ASSY REFER TO NOTE 1	02
89	4717238-15	. . UPPER BOLT	01
90	4717238-16	. . LOWER BOLT	01
91	MS20664C5	. . BALL END	02

NOTE 1—AIRPLANES -0775 AND ON AND AIRPLANES -0260 THRU -0774 INCORPORATING SB560-52-17.

NOTE 2—AIRPLANES -0260 THRU -0774 INCORPORATING SB560-52-17.

- ITEM NOT ILLUSTRATED

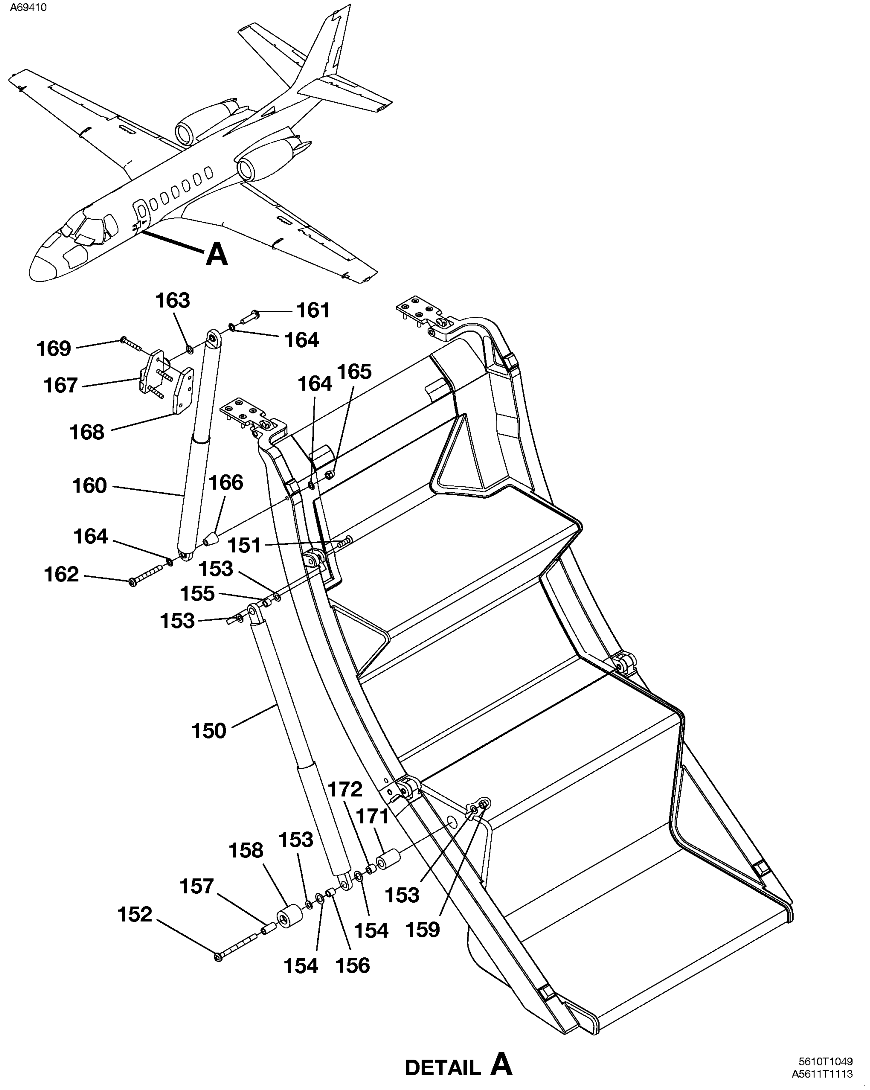

COMPOSITE DOOR STEP INSTALLATION
FIGURE 03 (SHEET 3)

FIG ITEM	PART NUMBER	NOMENCLATURE 1 2 3 4 5 6 7	UNITS PER ASSY
03			
150	6519497-2	. RATE CONTROL-LOWER	01
		ATTACHING PARTS	
151	MS24694-S100	. SCREW	01
152	MS27039-4-48	. SCREW	01
- 152A	MS27039-4-27	. SCREW REFER TO NOTE 1	01
153	NAS1149F0432P	. WASHER	04
154	NAS1149F0632P	. WASHER	02
155	NAS43HT4-19	. SPACER	01
156	NAS43HT4-25	. SPACER	01
157	NAS75-4-027	. BUSHING	01
158	4717238-17	. BUMPER	01
159	S3922S5	. NUT	01
		—*—	
160	6519497-6	. RATE CONTROL-UPPER	01
		ATTACHING PARTS	
161	MS27039-4-15	. SCREW	01
162	MS27039-4-33	. SCREW	01
163	NAS1149F0432P	. WASHER	01
164	MS35333-40	. WASHER-LOCK	03
165	S3922S5	. NUT	01
166	4717238-3	. SPACER CONE	01
		—*—	
167	6519677-1	. RATE CONTROL SUPPORT ASSY	01
168	6519009-18	. INSULATOR	01
		ATTACHING PARTS	
169	MS27039-1-19	. SCREW	03
		—*—	
- 170	6519583-15	. INSERT ASSY-RATE CONTROL	01
171	6519583-16	. . INSERT	01
172	NAS1395-4L	. . INSERT	01

NOTE 1—AIRPLANES -0260 THRU -0774 INCORPORATING SB560-52-17.

- ITEM NOT ILLUSTRATED

CHAPTER SECTION SUBJECT		NUMBER OF PAGES	DATE
53 - TITLE			
53 - LIST OF EFFECTIVE PAGES			
53 - RECORD OF TEMPORARY REVISIONS			
53 - TABLE OF CONTENTS			
53-10-00	Figure 01	4	Mar 1/2011
53-10-00	Figure 02	6	Apr 1/1994
53-10-00	Figure 02A	4	Feb 1/2012
53-10-00	Figure 03	2	Aug 1/2007
53-10-00	Figure 04	2	Apr 1/1994
53-10-01	Figure 01	4	Aug 1/2013
53-10-01	Figure 01A	4	Mar 1/2010
53-10-01	Figure 02	2	Aug 1/2015
53-11-00	Figure 01	4	Feb 1/2008
53-12-00	Figure 01	2	Aug 1/2007
53-12-01	Figure 01	6	Aug 1/2013
53-12-01	Figure 02	6	Aug 1/2013
53-12-02	Figure 01	2	Mar 1/2010
53-12-03	Figure 01	6	Mar 1/2010
53-12-03	Figure 02	8	Mar 1/2010
53-12-03	Figure 03	4	Feb 1/2008
53-12-04	Figure 01	8	Aug 1/2015
53-12-04	Figure 02	2	Mar 1/2010
53-12-05	Figure 01	6	Aug 1/2013
53-12-05	Figure 02	2	May 1/2001
53-12-06	Figure 01	10	Mar 1/2010
53-12-07	Figure 01	10	Aug 1/2013
53-12-07	Figure 02	8	Aug 1/2015
53-12-07	Figure 02A	2	Mar 1/2010
53-12-07	Figure 03	2	Aug 1/2013
53-12-07	Figure 04	2	Aug 1/2013
53-12-07	Figure 05	4	Aug 1/2015
53-12-07	Figure 06	2	Feb 1/2008
53-12-08	Figure 01	2	Mar 1/2010
53-12-08	Figure 02	2	Mar 1/2010
53-13-00	Figure 01	8	Aug 1/2015
53-13-00	Figure 02	2	Aug 1/2007
53-13-01	Figure 01	4	Mar 1/2010
53-13-01	Figure 02	4	Mar 1/2010
53-13-02	Figure 01	2	Feb 1/2009
53-13-03	Figure 01	2	Sep 1/1998
53-20-00	Figure 01	2	Aug 1/1997
53-20-00	Figure 01A	2	Aug 1/2007
53-20-00	Figure 02	2	Aug 1/2007
53-20-00	Figure 02A	2	Feb 1/2007
53-20-01	Figure 01	4	Aug 1/2015
53-20-01	Figure 01A	4	Aug 1/2013
53-20-01	Figure 01B	4	Aug 1/2015
53-20-01	Figure 01C	2	Feb 1/2009
53-20-01	Figure 02	4	Aug 1/2015
53-20-02	Figure 01	2	Aug 1/2015
53-20-02	Figure 02	2	Aug 1/2015
53-20-04	Figure 01	2	Oct 1/1990
53-20-04	Figure 02	4	Mar 1/2010
53-20-04	Figure 03	8	Aug 1/2013
53-20-04	Figure 03A	4	Aug 1/2013

© Cessna Aircraft Company

CHAPTER SECTION SUBJECT		NUMBER OF PAGES	DATE
53-20-04	Figure 03B	6	Aug 1/2015
53-20-05	Figure 01	6	Aug 1/2007
53-20-06	Figure 01	2	Aug 1/2007
53-20-06	Figure 02	4	Mar 1/2010
53-20-06	Figure 03	2	Mar 1/2010
53-20-06	Figure 04	2	Mar 1/2010
53-20-06	Figure 05	2	Mar 1/2010
53-20-06	Figure 06	2	Mar 1/2010
53-30-00	Figure 01	6	Aug 1/2007
53-30-00	Figure 01A	4	Mar 1/2010
53-30-00	Figure 01B	2	Mar 1/2010
53-30-00	Figure 02	2	Aug 1/2007
53-30-00	Figure 03	2	Aug 1/2007
53-50-00	Figure 01	4	Feb 1/2009
53-50-00	Figure 01A	4	Feb 1/2012
53-50-00	Figure 02	4	Aug 1/2013
53-50-00	Figure 03	4	Feb 1/2009

© Cessna Aircraft Company

SUBJECT	CHAPTER SECTION SUBJECT	FIGURE	EFFECTIVITY START	EFFECTIVITY END
NOSE BAGGAGE DOOR FRAME	53-10-00	01		
NOSE BULKHEADS	53-10-00	02	0001	0259
NOSE BULKHEADS	53-10-00	02A	0260	& ON
NOSE STRINGERS	53-10-00	03	0001	0259
NOSE STRINGERS	53-10-00	04	0260	& ON
NOSE WHEELWELL	53-10-01	01	0001	0259
NOSE WHEELWELL	53-10-01	01A	0260	& ON
STEERING DISCONNECT SUPPORT AND AVIONICS VENT GRAVEL RUNWAY KIT	53-10-01	02	0041	& ON
FLIGHT COMPARTMENT STRUCTURE	53-11-00	01		
CABIN ESCAPE HATCH FRAME	53-12-00	01		
FORWARD PRESSURE BULKHEAD	53-12-01	01	0001	0259
FORWARD PRESSURE BULKHEAD	53-12-01	02	0260	& ON
NOSE GEAR ACTUATOR SUPPORTS	53-12-02	01		
CABIN BULKHEADS - FORWARD	53-12-03	01		
CABIN BULKHEADS - CENTER	53-12-03	02		
AFT PRESSURE BULKHEAD	53-12-03	03		
CABIN STRINGERS	53-12-04	01	0001	0538
CABIN STRINGERS - LH WIDE CABIN DOOR	53-12-04	02	0111	0538
CABIN DOORFRAME	53-12-05	01		
WIDE CABIN DOOR RECEPTACLES	53-12-05	02	0250	0250
			0280	& ON
CABIN FLOOR SUPPORTS	53-12-06	01		
STUB WING - CENTER SECTION	53-12-07	01	0001	0538
STUB WING - RIBS	53-12-07	02	0001	0538
STUB WING RIB INSTALLATION BL 29.50 FORWARD	53-12-07	02A	0539	& ON
STUB WING - FORWARD SHEAR	53-12-07	03	0539	& ON
MAIN SPAR ASSY	53-12-07	04	0539	& ON
REAR SPAR ASSY	53-12-07	05	0539	& ON
SADDLE TANK INSTALLATION	53-12-07	06	0539	& ON
FUEL SUMP COMPONENTS - STUB WING	53-12-08	01	0001	0538
FUEL SUMP COMPONENTS - STUB WING	53-12-08	02	0539	& ON
TAILCONE SUPPORTS	53-13-00	01	0001	0538
FORWARD ENGINE BEAM	53-13-00	02	0539	& ON
TAILCONE BULKHEADS - FORWARD	53-13-01	01	0001	0538
TAILCONE BULKHEADS - AFT	53-13-01	02	0001	0538
TAILCONE STRINGERS	53-13-02	01	0001	0538
TAIL SKID	53-13-03	01		
INSTRUMENT PANEL SUPPORTS	53-20-00	01	0002	0259
INSTRUMENT PANEL SUPPORTS	53-20-00	01A	0260	0538
INSTRUMENT PANEL SUPPORTS	53-20-00	02	0539	0750
INSTRUMENT PANEL SUPPORTS	53-20-00	02A	0752	& ON
CONTROL PEDESTAL	53-20-01	01	0002	0259
CONTROL PEDESTAL	53-20-01	01A	0260	0291
CONTROL PEDESTAL	53-20-01	01B	0292	0538
CONTROL PEDESTAL	53-20-01	01C	0539	& ON
CONTROL PEDESTAL USED WITH SPERRY	53-20-01	02	0001	0259
SIDE CONSOLE STRUCTURE	53-20-02	01	0001	0538
SIDE CONSOLE STRUCTURE	53-20-02	02	0539	& ON
NOSE COMPARTMENT BAGGAGE FLOOR	53-20-04	01		
BAGGAGE COMPARTMENT DIVIDERS - NOSE	53-20-04	02	0001	0259
BAGGAGE COMPARTMENT DIVIDERS - NOSE	53-20-04	03	0260	0750
BAGGAGE COMPARTMENT DIVIDERS - NOSE	53-20-04	03A	0752	& ON
BAGGAGE COMPARTMENT FLOOR - NOSE	53-20-04	03B	0751	& ON
CABIN FLOORBOARDS	53-20-05	01	0001	0538

© Cessna Aircraft Company

SUBJECT	CHAPTER SECTION SUBJECT	FIGURE	EFFECTIVITY START	EFFECTIVITY END
COCKPIT FLOORBOARDS	53-20-06	01	0539	& ON
CABIN FLOORBOARDS - CENTER CLUB	53-20-06	02	0539	& ON
CABIN FLOORBOARDS - DOUBLE CLUB	53-20-06	03	0539	& ON
CABIN FLOORBOARDS - LH FORWARD NUMBER 9 SEAT	53-20-06	04	0539	& ON
CABIN FLOORBOARDS - RH FORWARD NUMBER 10 SEAT	53-20-06	05	0539	& ON
CABIN FLOORBOARDS - MIDSHIP CABINET	53-20-06	06	0539	& ON
FUSELAGE SKINS AND PANELS	53-30-00	01	0001	0259
FUSELAGE SKINS AND PANELS	53-30-00	01A	0260	0538
LEADING EDGE CUFF ASSEMBLY SKINS AND PANELS	53-30-00	01B	0539	& ON
STUB WING ACCESS PANELS	53-30-00	02	0001	0538
STUB WING ACCESS PANELS	53-30-00	03	0539	& ON
AERODYNAMIC FAIRINGS	53-50-00	01	0001	0259
AERODYNAMIC FAIRINGS	53-50-00	01A	0260	& ON
WING TO FUSELAGE FAIRINGS	53-50-00	02	0001	0538
WING TO FUSELAGE FAIRINGS	53-50-00	03	0539	& ON

© Cessna Aircraft Company

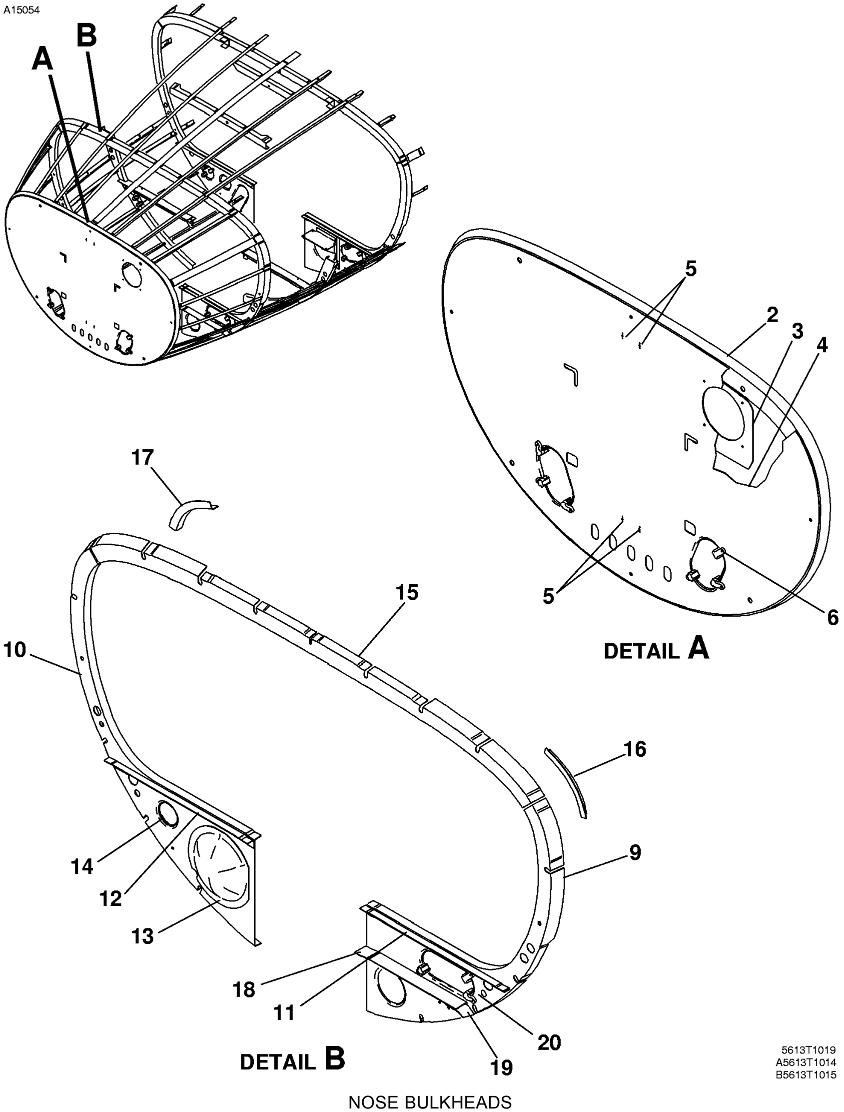

NOSE BULKHEADS
FIGURE 02A (SHEET 1)

FIG ITEM	PART NUMBER	NOMENCLATURE 1 2 3 4 5 6 7			UNITS PER ASSY	
02A						
-		NOSE BULKHEADS	0260	& ON	RF	
- 1	9156600-31	. SEAL	0260	0750	01	
- 1A	6313030-10	. FRAME ASSY-FS 42.75	0260	0400	01	
- 1B	6313030-23	. FRAME ASSY-FS 42.75	0401	0750	01	
- 1C	6513012-2	. FRAME ASSY FS 42.75	0752	0802	01	
- 1D	6513012-5	. FRAME ASSY FS 42.75	0803	& ON	01	R
2	6313030-15	. . FRAME			01	
3	6313030-12	. . DOUBLER	0260	0751	01	
- 3A	6313042-6	. . DOUBLER	0752	& ON	01	R
4	6313030-11	. . WEB	0260	0400	01	
- 4A	6313030-19	. . WEB	0401	0751	01	
- 4B	6313042-15	. . WEB	0752	& ON	01	R
5	MS21069-06	. . NUTPLATE			04	
- 5A	MS21069L08	. . NUTPLATE-WITH UNIVERSAL WEATHER TRANSMITTER	0803	& ON	04	R
- 5B	6313030-20	. . DOUBLER ASSY	0401	& ON	01	R
6	S2034-1	. MOUNT FS 42.75 FSO S4132-1			NP	
- 6A	S4132-1	. MOUNT FS42.75 FOR SPARES ONLY			06	
- 7	6313032-5	. FRAME ASSY-LH FS 59.00			01	
- 8	6313032-15	. FRAME ASSY-RH FS 59.00	0260	0400	01	
- 8A	6313032-18	. FRAME ASSY-RH FS 59.00	0401	0750	01	
- 8B	6313032-20	. FRAME ASSY-RH FS 59.00	0752	& ON	01	R
9	6313032-7	. . FRAME-LH			01	
10	6313032-16	. . FRAME-RH	0260	0750	01	
- 10A	6313032-8	. . FRAME-RH	0752	& ON	01	R
11	6313032-9	. . STIFFENER-LH			01	
12	6313032-17	. . STIFFENER-RH	0260	0400	01	
- 12A	6313032-10	. . STIFFENER-RH REFER TO NOTE 1	0401	0750	01	R
13	5513024-16	. . COVER-RH	0260	0750	01	
14	S1050-1	. . GROMMET BKI			01	
15	6313032-2	. FRAME-UPPER FS59.00			01	
16	5513024-5	. SPLICE ANGLE-LH FS 59.00			01	
17	5513024-6	. SPLICE ANGLE-RH FS 59.00			01	
18	5513024-20	. ANGLE-LH FS59.00	0260	0750	01	
19	5513024-21	. GUSSET FS 59.00	0260	0750	01	
20	S2034-1	. MOUNT FS 59.00 FSO S4132-1	0260	0750	NP	
- 20A	S4132-1	. MOUNT FS 59.00 FOR SPARES ONLY	0260	0750	03	

NOTE 1—AIRPLANES -0401 THRU -0750 AND AIRPLANES -0260 THRU -0538 INCORPORATING SB560-34-107. R

- ITEM NOT ILLUSTRATED

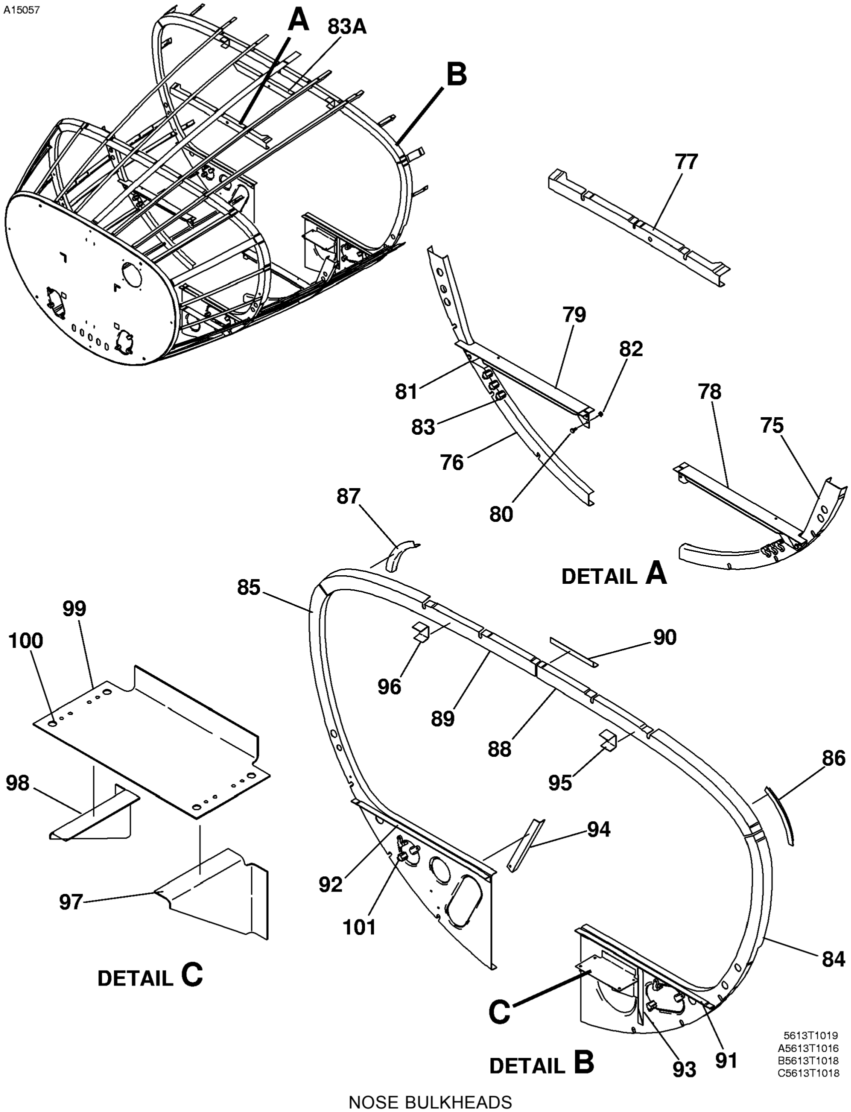

NOSE BULKHEADS
FIGURE 02A (SHEET 2)

FIG ITEM	PART NUMBER	NOMENCLATURE 1 2 3 4 5 6 7			UNITS PER ASSY
02A					
75	6313033-3	. FRAME-LH FS74.00			01
76	6313033-4	. FRAME-RH FS74.00			01
77	6313033-2	. FRAME-UPPER FS74.00			01
78	6513001-1	. SUPPORT ASSY-LH			01
79	6513001-2	. SUPPORT ASSY-RH			01
		ATTACHING PARTS			
80	AN3-3A	. BOLT			04
81	MS21069L3	. NUTPLATE			02
82	MS21083N3	. NUT			02
		—*—			
83	S4132-1	. MOUNT-FS74.00			06
83A	6313036-2	. FRAME-UPPER CTR FS85.00			01
84	6313034-7	. FRAME-LOWER LH FS89.00			01
85	5513028-32	. FRAME-LOWER RH FS89.00	0001	0638	01
- 85A	6513011-1	. FRAME-LOWER RH FS89.00	0639	& ON	01 R
86	5513028-5	. SPLICE-LH ANGLE FS89.00			01
87	5513028-6	. SPLICE-RH ANGLE FS89.00			01
88	6313034-3	. FRAME-UPPER LH FS89.00			01
89	6313034-4	. FRAME-UPPER RH FS89.00			01
90	6313034-2	. SPLICE-UPPER CENTER FS89.00			01
91	6313034-13	. ANGLE-LH FS89.00			01
92	6313034-12	. ANGLE-RH FS89.00			01
93	5513028-21	. STIFFENER FS89.00			01
94	6313034-11	. ANGLE-RH FS89.00	0001	0639	01
- 94A	6513011-2	. ANGLE-RH FS89.00	0639	& ON	01 R
95	6313034-5	. CLIP-LH FS89.00			01
96	6313034-6	. CLIP-RH FS89.00			01
97	6518170-4	. SUPPORT-LH USED WITH GRAVEL RUNWAY KIT			01
98	6518170-7	. SUPPORT-RH USED WITH GRAVEL RUNWAY KIT			01
99	6518170-2	. BRACKET ASSY-USED WITH GRAVEL RUNWAY KIT			01
100	MS21052L3	. . NUTPLATE			04
101	S2034-1	. MOUNT-FSO S4132-1			NP
- 102	S4132-1	. MOUNT-FOR SPARES ONLY			06

- ITEM NOT ILLUSTRATED

A15062

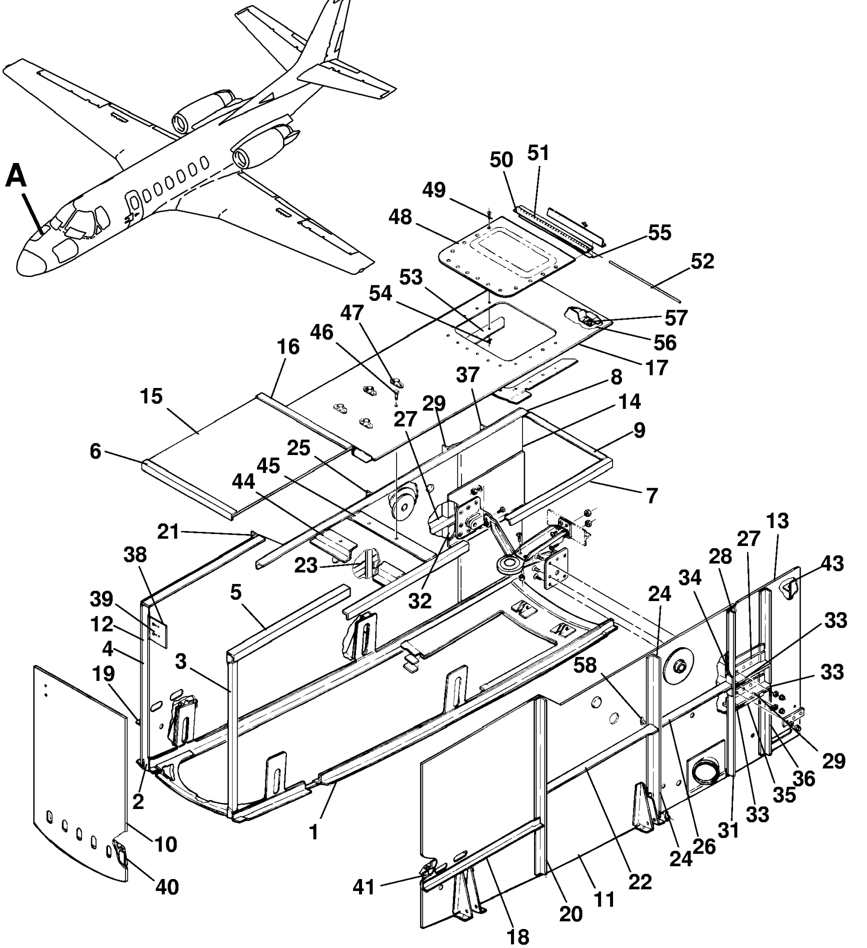

DETAIL A

5610T1001
A65134001

NOSE WHEELWELL
FIGURE 01 (SHEET 1)

FIG ITEM	PART NUMBER	NOMENCLATURE 1 2 3 4 5 6 7				UNITS PER ASSY
01						
-		NOSE WHEELWELL		0001	0259	RF
1	5513010-9	. ANGLE-LOWER LH FS42.75 TO FS94.00				01
2	5513010-10	. ANGLE-LOWER RH FS42.75 TO FS94.00				01
3	5513011-9	. ANGLE-LH FORWARD SUPPORT				01
4	5513011-10	. ANGLE-RH FORWARD SUPPORT				01
5	5513011-7	. ANGLE-UPPER LH AND RH FORWARD FS42.75 TO FS59.00				02
6	5513011-48	. ANGLE-UPPER FORWARD FS42.75				01
7	5513011-13	. ANGLE-UPPER LH FS59.00 TO FS94.00				01
8	5513011-14	. ANGLE-UPPER RH FS59.00 TO FS94.00				01
9	5513011-25	. ANGLE-UPPER AFT FS94.00				01
10	5513010-4	. WEB-FORWARD				01
11	5513010-3	. WEB-LH FORWARD				01
12	5513010-15	. WEB-RH FORWARD				01
13	5513010-37	. WEB-LH AFT				01
14	5513010-36	. WEB-RH AFT				01
15	5513010-8	. WEB-UPPER FORWARD				01
16	5513010-7	. ANGLE-UPPER				01
17	5513010-27	. WEB-UPPER AFT				01
18	5513010-34	. ANGLE-LH FORWARD FS42.75 TO FS59.00 WL99.20				01
19	5513010-17	. ANGLE-RH FORWARD FS42.75 TO FS59.00 WL99.00				01
20	5513011-5	. ANGLE-LH SUPPORT FS59.00				01
21	5513011-6	. ANGLE-RH SUPPORT FS59.00				01
22	5513011-11	. ANGLE-LH FS59.00 TO FS74.00 WL103.00				01
23	5513011-38	. ANGLE-RH FS59.00 TO FS74.00 WL103.00		0001	0055	01
- 23A	5513011-12	. ANGLE-RH FS59.00 TO FS74.00 WL103.00		0056	& ON	01
24	5513011-3	. ANGLE-LH FS74.00				01
25	5513011-4	. ANGLE-RH FS74.00				01
26	5513011-34	. ANGLE-LH AND RH FS74.00 TO FS84.00 WL103.00				02
27	5513011-29	. ANGLE-LH FS84.00 TO FS89.00 WL103.00				01
28	5513011-28	. ANGLE-UPPER RH FS84.00 TO FS89.00 WL103.00				01
29	5513011-31	. ANGLE-UPPER LH FS84.00 TO FS89.00				01
- 30	5513011-30	. ANGLE-UPPER RH FS84.00 TO FS89.00				01
31	5513011-33	. ANGLE-LOWER LH FS84.01				01
32	5513011-32	. ANGLE-LOWER RH FS84.01				01
33	5513011-35	. CLIP-LH AND RH				06
34	5513011-36	. CLIP-LH AND RH				02
35	5513010-38	. DOUBLER-LH AND RH				02
36	5513011-19	. ANGLE-LH SUPPORT FS89.00				01
37	5513011-20	. ANGLE-RH SUPPORT FS89.00				01
38	5518315-13	. DOUBLER ASSY-FS42.75				01
39	MS21051-08	. . NUTPLATE				02
40	5513010-28	. BAFFLE-FORWARD FS42.75				01
41	5513010-29	. BAFFLE-LH SIDE				01
- 42	5513010-30	. BAFFLE-RH SIDE				01
43	5513010-18	. BRACKET-LH FS94.00				01
44	5513061-4	. ZEE-FORWARD FS65.35				01
- 44A	500146-33	. ZEE-FORWARD FS65.35 USED WITH GRAVEL RUNWAY KIT				01
45	5513061-5	. ZEE-AFT FS65.35				01
46	AN4-5A	. BOLT				04
47	6800-048	. BOLT RETAINER	V80539			04
48	5513010-19	. DOOR ASSY-FS89.00				01
		ATTACHING PARTS				
49	MS27039-1-06	. SCREW				12
		—*—				
50	5513010-22	. . HINGE HALF-FORWARD				01
51	5513010-21	. . HINGE HALF-AFT				01
52	MS20253-2-960	. . HINGE PIN				01
53	5513010-23	. DOUBLER				01
54	MS21048L3	. NUTPLATE				12
55	5513010-25	. SPACER				01
56	5513010-20	. BRACKET ASSY				01
57	MS21069-3	. . NUTPLATE				02
58	MS21069-3	. NUTPLATE				01

- ITEM NOT ILLUSTRATED

A15055

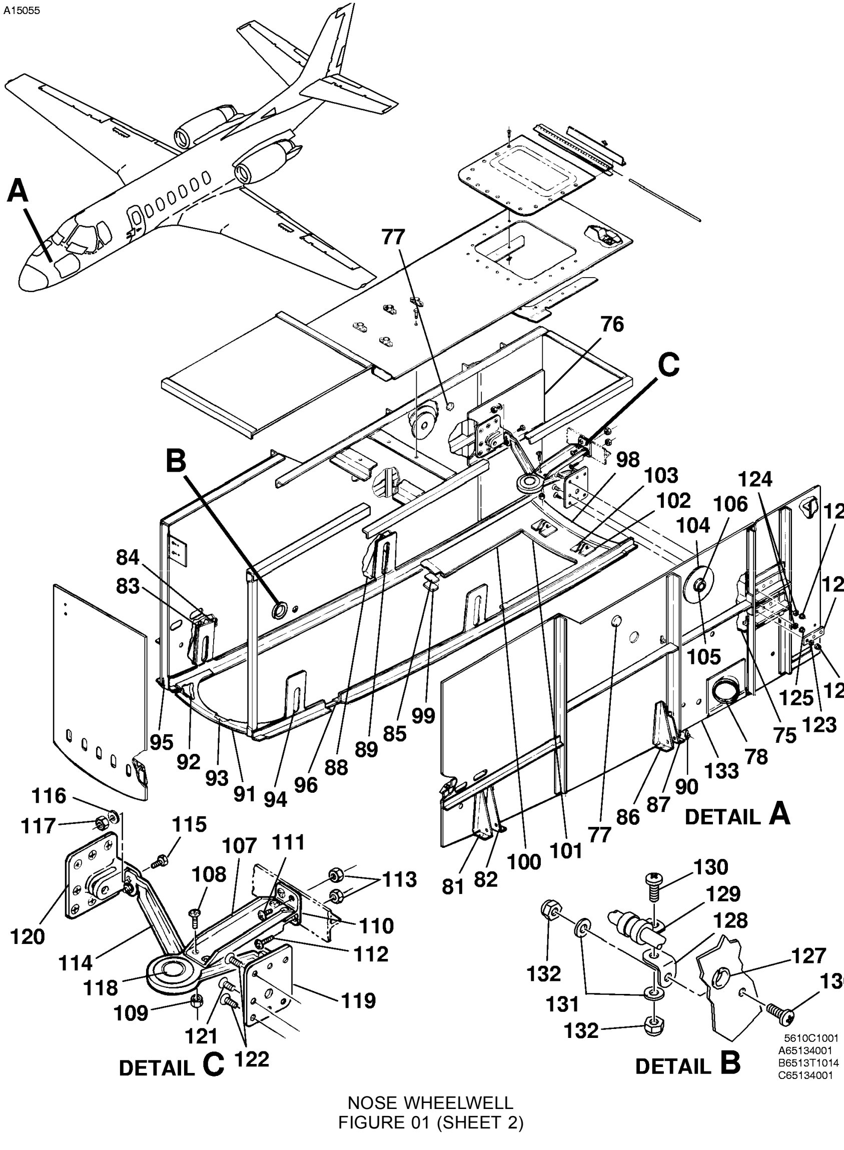

NOSE WHEELWELL
FIGURE 01 (SHEET 2)

FIG ITEM	PART NUMBER	NOMENCLATURE 1 2 3 4 5 6 7		UNITS PER ASSY	
01					
75	5513010-11	. PLATE-LH		01	
76	5513010-12	. PLATE-RH		01	
77	CM2692-28-1S	. PLUG BUTTON		02	
78	5518315-18	. VENT ASSY		01	
- 79	MS21071L08	. NUTPLATE		06	
- 80	MS21069L3	. NUTPLATE		01	
81	5513050-5	. BRACKET-FORWARD LH HINGE FS48.00		01	
82	5513050-7	. BRACKET-FORWARD LH HINGE FS48.00		01	
83	5513050-6	. BRACKET-FORWARD RH HINGE FS48.00		01	
84	5513050-8	. BRACKET-FORWARD RH HINGE FS48.00		01	
85	5513050-26	. SHIM-LH AND RH		02	
86	5513050-9	. BRACKET-AFT LH HINGE FS72.65		01	
87	5513050-11	. BRACKET-AFT LH HINGE FS72.65		01	
88	5513050-10	. BRACKET-AFT RH HINGE FS72.65		01	
89	5513050-12	. BRACKET-AFT RH HINGE FS72.65		01	
90	MS21069-08	. NUTPLATE		02	
91	5513050-14	. STOP		01	
92	5513050-33	. SHIM		02	
93	5513050-29	. RUB BLOCK-FORWARD		01	
94	5513050-35	. DOUBLER-LH		01	
95	5513050-36	. DOUBLER-RH		01	
96	5513050-27	. BLOCK-RUB LH		01	
- 97	5513050-28	. BLOCK-RUB RH		01	
98	5513050-23	. PAN		01	
99	5513050-30	. BLOCK-RUB		02	
100	5513050-31	. BLOCK-RUB		02	
101	5513050-32	. BLOCK-RUB AFT CENTER		01	
102	5513050-24	. ANGLE-OUTBOARD		02	
103	5513050-25	. ANGLE-INBOARD		02	
104	5513055-2	. DOUBLER		02	
105	5513062-1	. SUPPORT ASSY-TORQUE TUBE		02	
106	MS24461-4	. . BEARING		01	
107	5513055-3	. CHANNEL-TRUNION BRACE		01	
108	MS27039-1-07	. SCREW CHANNEL ATTACH		04	
109	MS21042-3	. NUT CHANNEL ATTACH		04	R
110	5513055-4	. TEE-MOUNTING BRACKET		01	
		ATTACHING PARTS			
111	MS27039-1-07	. SCREW		02	
112	MS27039-1-08	. SCREW		02	
113	MS21042-3	. NUT		04	R
		—*—			
114	5513057-1	. SUPPORT ASSY FSO 5513057-3		NP	
- 114A	5513057-3	. SUPPORT ASSY		01	
		ATTACHING PARTS			
115	AN3-6A	. . BOLT		04	
116	NAS1149F0332P	. . WASHER		04	
117	MS21042-3	. . NUT		04	
		—*—			
118	KP16BS-FS464	. . BEARING	V21335	01	
119	6613056-3	. SUPPORT-LH NOSE GEAR TRUNNION		01	
- 119A	6613056-5	. SUPPORT-LH NOSE GEAR TRUNNION ALT FOR 6613056-3		NP	
- 119B	6613056-201	. SUPPORT-LH NOSE GEAR TRUNNION-SPARES ONLY		01	
120	6613056-4	. SUPPORT-RH NOSE GEAR TRUNNION		01	
- 120A	6613056-6	. SUPPORT-RH NOSE GEAR TRUNNION ALT FOR 6613056-4		NP	
- 120B	6613056-202	. SUPPORT-RH NOSE GEAR TRUNNION-SPARES ONLY		01	
		ATTACHING PARTS			
121	NAS517-3-6	. SCREW		01	
122	NAS517-3-7	. SCREW		06	
123	NAS1149F0332P	. WASHER		03	
124	NAS1149F0363P	. WASHER		04	
125	MS21042-3	. NUT		07	
		—*—			
126	5513055-9	. BLOCK-RADIUS LH AND RH		02	
127	NAS557-6	. GROMMET		01	
128	AN743-7	. BRACKET		01	
129	MS21919WDG6	. CLAMP		01	
130	MS27039-1-8	. SCREW		02	
131	NAS1149D0332H	. WASHER		02	
132	MS21044N3	. NUT		02	
133		. STEERING DISCONNECT SUPPORT AND AVIONICS VENT GRAVEL RUNWAY KIT REFER TO FIGURE 02		RF	

- ITEM NOT ILLUSTRATED

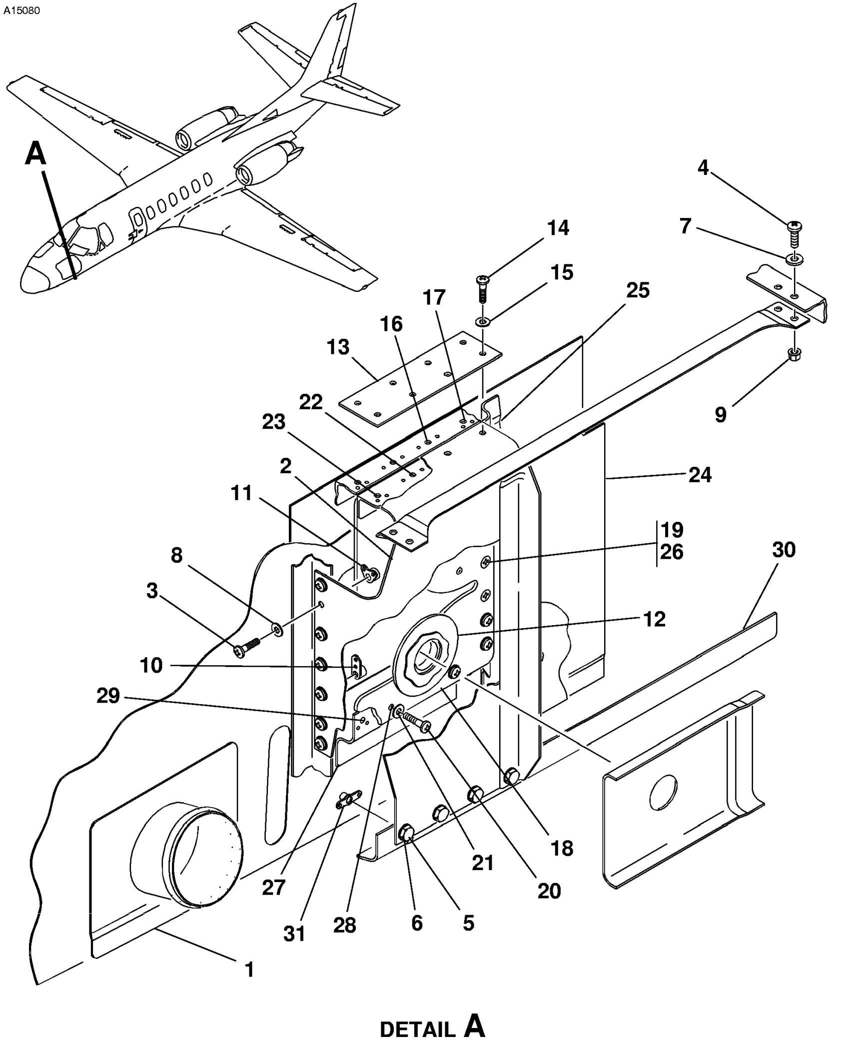

STEERING DISCONNECT SUPPORT AND AVIONICS VENT GRAVEL RUNWAY KIT
FIGURE 02 (SHEET 1)

FIG ITEM	PART NUMBER	NOMENCLATURE 1 2 3 4 5 6 7			UNITS PER ASSY
02					
-		STEERING DISCONNECT SUPPORT AND AVIONICS VENT GRAVEL RUNWAY KIT	0041	& ON	RF
1	6590200-2	. VENT ASSY-AVIONICS			01
2	6590205-1	. SUPPORT ASSY-STEERING DISCONNECT	0041 0314 0417	0259 0314 0571	01
- 2A	6590205-24	. SUPPORT ASSY-STEERING DISCONNECT	0572	0644	01
- 2B	6590205-29	. SUPPORT ASSY	0645	& ON	01
		ATTACHING PARTS			
3	MS27039-810	. SCREW	0041 0314 0417	0259 0314 0571	07
- 3A	MS27039-810	. SCREW	0572	& ON	06
4	MS27039-1-09	. SCREW			04
5	NAS1352-08-8	. BOLT			04
6	NAS1149FN816P	. WASHER			04
7	NAS1149F0363P	. WASHER			04
8	NAS1149FN832P	. WASHER	0041 0314 0417	0259 0314 0571	07
- 8A	NAS1149FN832P	. WASHER	0572	& ON	06
9	MS21042L3	. NUT			04
10	MS21071L08	. NUTPLATE	0041 0314 0417	0259 0314 0571	06
- 10A	MS21071L08	. NUTPLATE	0572	& ON	05
11	MS21073L08	. NUTPLATE			01
		—*—			
12	6590205-6	. . BEARING BLOCK ASSY			01
13	6590205-20	. STRAP	0041 0314 0417	0259 0314 0571	01
- 13A	6590205-28	. STRAP	0572	& ON	01
		ATTACHING PARTS			
14	MS27039-810	. SCREW			08
15	NAS1149FN832P	. WASHER			08
16	MS21047L08	. NUTPLATE			02
17	MS21083L08	. NUTPLATE			02
		—*—			
18	6590205-8	. GUIDE PLATE ASSY			01
		ATTACHING PARTS			
19	MS24694-S8	. SCREW	0001	0644	03 R
- 19A	MS24694-S8	. SCREW	0645	& ON	03
20	MS27039-0811	. SCREW			10
21	NAS1149FN832P	. WASHER			10
		—*—			
22	MS21047L08	. . NUTPLATE			02
23	MS21073L08	. . NUTPLATE			02
24	6590205-16	. DOUBLER-FSO 6590205-31	0001	0644	NP
- 24A	6590205-31	. DOUBLER	0645	& ON	01
25	6590205-11	. SUPPORT PLATE ASSY-VERTICAL			01
26	MS21071L08	. . NUTPLATE			08
27	6590205-13	. SUPPORT PLATE ASSY-LOWER			01
28	MS21071L08	. . NUTPLATE			04
29	MS21073L08	. . NUTPLATE			01
30	6590205-17	. STRINGER ASSY	0041 0314 0417	0259 0314 0571	01
- 30A	6590205-26	. STRINGER ASSY	0572	& ON	01
31	MS21047L08	. . NUTPLATE			04

- ITEM NOT ILLUSTRATED

A15096

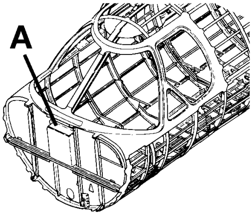

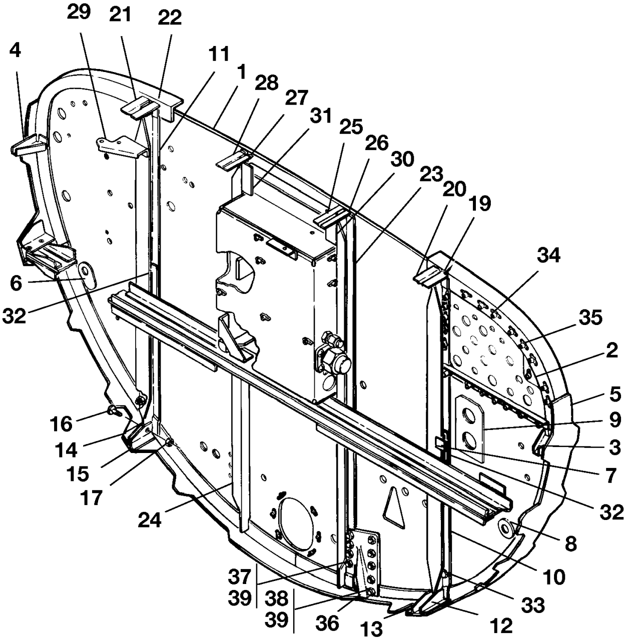

DETAIL A

5610T1001A
A65113048

FORWARD PRESSURE BULKHEAD
FIGURE 01 (SHEET 1)

FIG ITEM	PART NUMBER	NOMENCLATURE 1 2 3 4 5 6 7			UNITS PER ASSY
01					
-		FORWARD PRESSURE BULKHEAD	0001	0259	RF
1	5511042-42	. WEB ASSY-BONDED	0001	0131	01
2	MS21072L3	. . NUTPLATE			01
3	5511040-39	. GUSSET LH			01
4	5511040-40	. GUSSET RH			01
5	5511040-76	. BAND STIFFENER			01
6	5511040-83	. DOUBLER			01
7	9654568-2	. PLATE			01
8	5511040-27	. DOUBLER			01
9	5511040-91	. DOUBLER			01
10	5511041-9	. SUPPORT LH			01
11	5511041-8	. SUPPORT RH			01
12	5511040-3	. ANGLE LH-OUTBOARD			01
13	5511040-4	. ANGLE LH-INBOARD			02
14	5511040-19	. ANGLE RH-OUTBOARD			01
15	5511040-20	. ANGLE RH ANGLE-RH INBOARD			01
16	MS27039-1-08	. SCREW			04
17	MS21045L3	. NUT			06
- 18	MS27039-1-09	. SCREW			02
19	5511040-6	. ANGLE LH-OUTBOARD			01
20	5511040-7	. ANGLE LH-INBOARD			01
21	5511040-21	. ANGLE RH-OUTBOARD			01
22	5511040-22	. ANGLE RH-INBOARD			01
23	5511041-7	. SUPPORT LH			01
24	5511041-6	. SUPPORT RH			01
25	5511040-52	. ANGLE RH FSO 5511040-106			NP
- 25A	5511040-106	. ANGLE RH			01
26	5511040-53	. ANGLE LH FSO 5511040-105			NP
- 26A	5511040-105	. ANGLE LH			01
27	5511040-55	. ANGLE LH FSO 5511040-107			NP
- 27A	5511040-107	. ANGLE LH			01
28	5511040-54	. ANGLE RH FSO 5511040-108			NP
- 28A	5511040-108	. ANGLE RH			01
29	5517405-2	. BRACKET-PNEUMATIC BOTTLE MOUNT			01
30	5511041-11	. ANGLE-LH FSO 5511041-15			NP
- 30A	5511041-15	. ANGLE-LH			01
31	5511041-10	. ANGLE-RH FSO 5511041-14			NP
- 31A	5511041-14	. ANGLE-RH			01
32	5511040-16	. ANGLE			04
33	AN3-5	. BOLT			02
34	MS21048-3	. NUTPLATE			11
35	MS21072-3	. NUTPLATE			02
36	5511058-2	. FITTING FITTING-JACK PAD FSO 6511285-1	0001	0180	NP
- 36A	6511285-1	. FITTING-JACK PAD	0181	0259	01
37	AN3-3A	. BOLT-ATTACHING PART FOR 6511285-1			05
38	AN3-4A	. BOLT-ATTACHING PART FOR 6511285-1			05
39	MS21042L3	. NUT-ATTACHING PART FOR 6511285-1			10

- ITEM NOT ILLUSTRATED

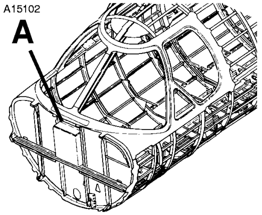

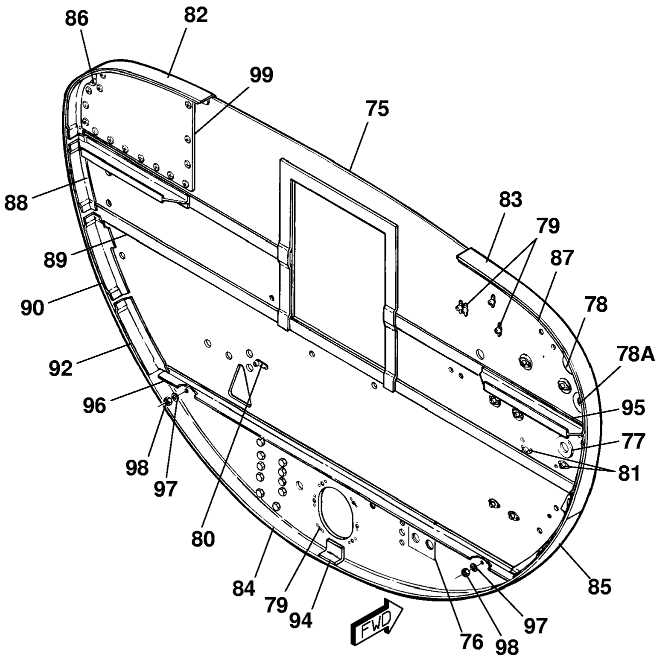

DETAIL A
AFT SIDE

56112003
A65113047

FORWARD PRESSURE BULKHEAD
FIGURE 01 (SHEET 2)

FIG ITEM	PART NUMBER	NOMENCLATURE 1 2 3 4 5 6 7			UNITS PER ASSY	
01						
75	5511042-42	. WEB ASSY-BONDED	0001	0131	01	
- 75A	5511042-78	. WEB ASSY-BONDED	0132	0215	01	
- 75B	5511042-71	. WEB ASSY	0216	0259	01	
- 75C	5511042-72	. . WEB BOND ASSY	0216	0259	01	
76	5511042-23	. . DOUBLER			01	
77	5511042-46	. . DOUBLER	0001	0215	01	
78	5511042-44	. . DOUBLER			01	
78A	5511042-45	. . DOUBLER	0001	0215	01	
79	MS21047L3	. . NUTPLATE			17	
80	MS21071L3	. . NUTPLATE			13	
81	NAS1474A3	. . NUTPLATE			09	
82	5511040-59	. ANGLE LH-UPPER			01	
83	5511040-60	. ANGLE RH-UPPER			01	
84	5511040-77	. ANGLE LH-LOWER			01	
85	5511040-78	. ANGLE RH-LOWER			01	
86	5511040-41	. ANGLE LH UPPER			01	
87	5511040-42	. ANGLE RH UPPER			01	
88	5511040-43	. ANGLE LH			01	
89	5511040-44	. ANGLE RH			01	
90	5511040-99	. ANGLE LH FSO 6311183-41			NP	
- 90A	6311183-41	. ANGLE LH SPARES ONLY			01	
- 91	5511040-100	. ANGLE RH FSO 6311183-42			NP	
- 91A	6311183-42	. ANGLE RH SPARES ONLY			01	
92	5511040-79	. ANGLE LH			01	
- 93	5511040-80	. ANGLE RH			01	
94	5511040-81	. SPLICE-BOTTOM			01	
95	5511040-38	. CHANNEL-STIFFENER			02	
96	5511041-12	. SUPPORT			01	
97	NAS1149F0363P	. WASHER			02	
98	MS21045L3	. NUT			02	
99	9664560-1	. PLATE ASSY-AVIONICS FEED THRU STANDARD	0001	0003	01	
- 100	9664560-3	. PLATE ASSY-AVIONICS FEED THRU STANDARD	0004	0124	01	
- 101	9664578-1	. PLATE ASSY-AVIONICS FEED THRU STANDARD	0125	0259	01	
- 102	9664561-1	. PLATE ASSY-AVIONICS FEED THRU OPTIONAL			01	
- 103	9690493-2	. PLATE ASSY-AVIONICS FEED THRU REFER TO NOTE 1	0001	0259	01	R

NOTE 1—AIRPLANES -0001 THRU -0259 INCORPORATING SB560-34-116 R

- ITEM NOT ILLUSTRATED

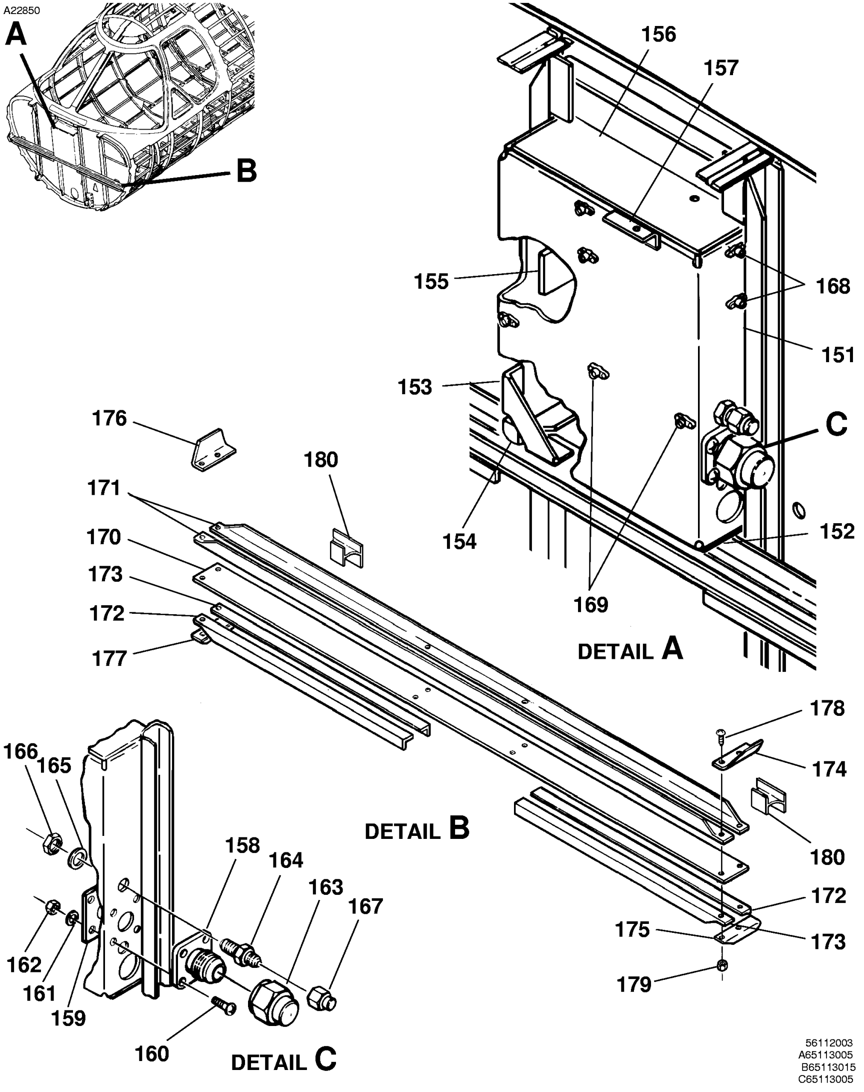

FORWARD PRESSURE BULKHEAD
FIGURE 01 (SHEET 3)

FIG ITEM	PART NUMBER	NOMENCLATURE 1 2 3 4 5 6 7	UNITS PER ASSY
01			
- 150	5511040-71	. BOX ASSY	01
151	5511040-70	. . BOX	01
152	5511040-15	. . COVER	01
153	5511040-61	. . CLIP	04
154	5522330-2	. . CORNER SEAL	04
155	5511040-69	. . PLATE	01
156	5511040-66	. . COVER-UPR-TOP	01
157	5511040-30	. . ANGLE	01
158	MS20760D20	. . CONNECTOR	01
159	5511040-50	. . STIFFENER	01
		ATTACHING PARTS	
160	MS27039-4-09	. . SCREW	04
161	NAS1149F0416P	. . WASHER	04
162	MS21083N4	. . NUT	04
		—*—	
163	AN929A20	. . CAP ASSY	01
164	MS21900D6	. . ADAPTER-FSO MS21900W6	NP
- 164A	MS21900W6	. . ADAPTER-FOR SPARES ONLY	01
165	NAS1149D0916K	. . WASHER	01
166	AN924-6D	. . NUT-JAM	01
167	AN929A6	. . CAP ASSY	01
168	NAS1474A3	. . NUTPLATE	09
169	AN256-10	. . NUTPLATE	04
170	5510005-8	. WEB-BULKHEAD BEAM SUPPORT	01
171	5510006-1	. ANGLE	02
172	5510006-2	. ANGLE-LH AND RH	02
173	5510006-3	. ANGLE-LH AND RH	02
174	5510005-3	. ANGLE LH	01
175	5510005-5	. ANGLE LH	01
176	5510005-4	. ANGLE RH	01
177	5510005-6	. ANGLE RH	01
		ATTACHING PARTS	
178	NAS221-10	. SCREW	04
179	MS21045L3	. NUT	04
		—*—	
180	5510005-7	. SUPPORT	02

- ITEM NOT ILLUSTRATED

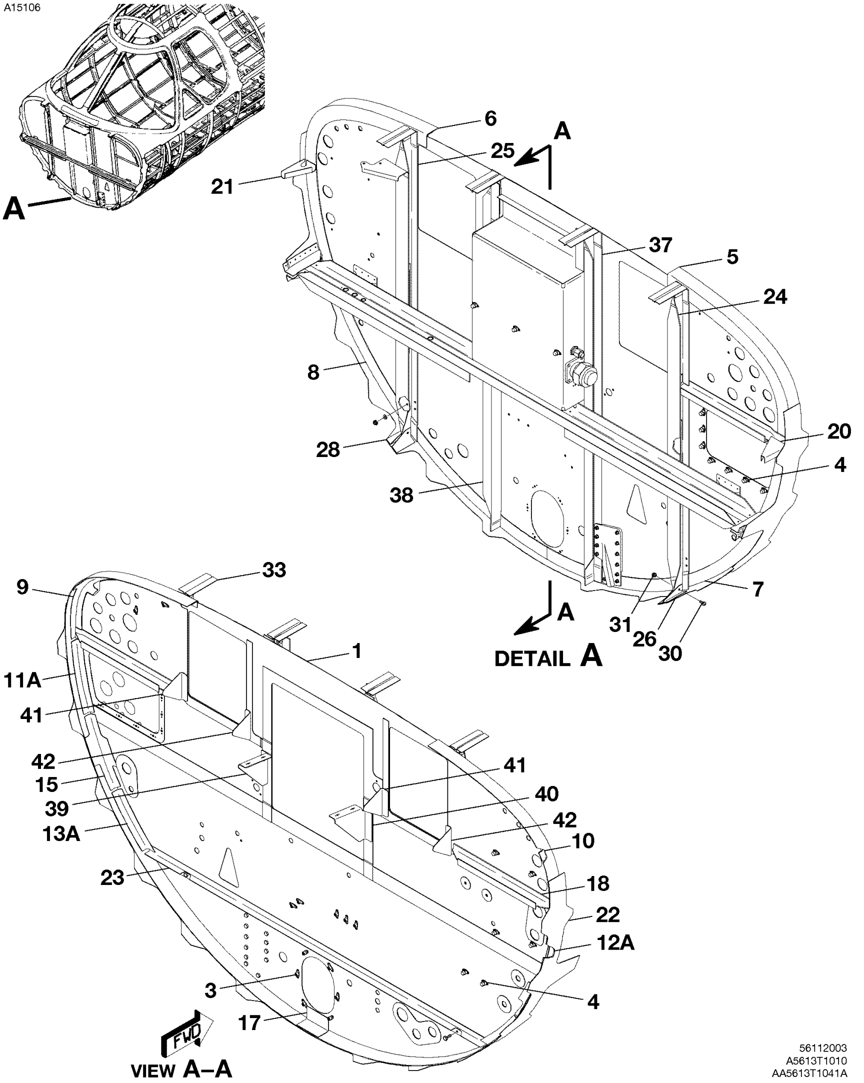

FORWARD PRESSURE BULKHEAD
FIGURE 02 (SHEET 1)

FIG ITEM	PART NUMBER	NOMENCLATURE 1 2 3 4 5 6 7			UNITS PER ASSY
02					
-		FORWARD PRESSURE BULKHEAD	0260	& ON	RF
1	6511291-1	. WEB ASSY	0260	0400	01
- 1A	6511291-41	. WEB ASSY	0401	0538	01
- 1B	6511551-1	. WEB ASSY FSO 6511551-5	0539	0563	NP
- 1C	6511551-3	. WEB ASSY	0564	0632	01
- 1D	6511551-5	. WEB ASSY	0633	0751	01
- 1E	6511554-1	. WEB ASSY FSO 6511554-3	0752	0776	NP
- 1F	6511554-3	. WEB ASSY	0777	& ON	01
- 2	6511291-2	. . WEB ASSY - BOND	0260	0400	01
- 2A	6511291-42	. . WEB ASSY - BOND	0401	0538	01
- 2B	6511551-2	. . WEB BOND ASSY	0539	0563	01
- 2C	6511551-4	. . WEB BOND ASSY FSO 6511551-6	0564	0632	NP
- 2D	6511551-6	. . WEB BOND ASSY	0633	0751	01
- 2E	6511554-2	. . WEB BOND ASSY	0752	& ON	01
3	MS21047L3	. . NUTPLATE			13
4	NAS1474A3	. . NUTPLATE			22
5	5511040-59	. ANGLE LH-UPPER			01
6	5511040-60	. ANGLE RH-UPPER			01
7	5511040-77	. ANGLE LH-LOWER			01
8	5511040-78	. ANGLE RH-LOWER			01
9	6511291-31	. ANGLE-LH UPPER			01
10	6511291-32	. ANGLE-RH UPPER			01
- 11	6511291-33	. ANGLE-LH	0260	0750	01
11A	6511555-5	. ANGLE-LH	0752	& ON	01
- 12	6511291-34	. ANGLE-RH	0260	0750	01
12A	6511555-6	. ANGLE-RH	0752	& ON	01
- 13	5511040-99	. ANGLE LH FSO 6311183-41	0260	0750	NP
13A	6511555-7	. ANGLE-LH	0752	& ON	01
- 14	5511040-100	. ANGLE RH FSO 6311183-42	0260	0750	NP
- 14A	6511555-8	. ANGLE-RH	0752	& ON	01
15	5511040-79	. ANGLE LH			01
- 16	5511040-80	. ANGLE RH			01
17	5511040-81	. SPLICE-BOTTOM			01
18	5511040-38	. CHANNEL-STIFFENER			02
- 19	6511291-27	. GUSSET-LH	0260	0464	01
- 19A	6511291-57	. GUSSET-LH	0465	& ON	01
20	6511291-28	. GUSSET-LH	0260	0464	01
- 20A	6511291-56	. GUSSET-LH	0465	& ON	01
21	5511040-40	. GUSSET RH-RH			01
22	5511040-76	. BAND-OUTER STIFFENER			01
23	5511041-12	. SUPPORT			01
24	5511041-9	. SUPPORT LH			01
25	5511041-8	. SUPPORT RH			01
26	6311040-7	. ANGLE-LOWER LH OUTBD			01
- 27	6311040-9	. ANGLE-LOWER LH INBD			02
28	6311040-8	. ANGLE-LOWER RH OUTBD ANGLE-RH OUTBOARD			01
- 29	6311040-10	. ANGLE-LOWER RH INBD ANGLE-RH INBOARD			01
30	MS27039-1-08	. SCREW			04
31	MS21045L3	. NUT	0260	0538	06
- 32	MS27039-1-09	. SCREW	0260	0538	02
33	6311040-4	. ANGLE-UPPER RH OUTBD FSO 6311040-26	0260	0646	NP
- 33A	6311040-20	. ANGLE-UPPER RH OUTBD FSO 6311040-26	0647	0667	NP
- 33B	6311040-26	. ANGLE-UPPER RH OUTBD	0668	& ON	01
- 34	6311040-5	. ANGLE-UPPER LH INBD FSO 6311040-23	0260	0646	NP
- 34A	6311040-21	. ANGLE-UPPER LH INBD FSO 6311040-23	0647	0667	NP
- 34B	6311040-23	. ANGLE-UPPER LH INBD	0668	& ON	01
- 35	6311040-3	. ANGLE-UPPER LH OUTBD FSO 6311040-25	0260	0646	NP
- 35A	6311040-19	. ANGLE-UPPER LH OUTBD FSO 6311040-25	0647	0667	NP
- 35B	6311040-25	. ANGLE-UPPER LH OUTBD	0668	& ON	01
- 36	6311040-6	. ANGLE-UPPER RH INBD FSO 6311040-24	0260	0646	NP
- 36A	6311040-22	. ANGLE-UPPER RH INBD FSO 6311040-24	0647	0667	NP
- 36B	6311040-24	. ANGLE-UPPER RH INBD	0668	& ON	01
37	5511041-7	. SUPPORT LH			01
38	5511041-6	. SUPPORT RH			01
39	6511555-9	. BRACKET ASSY-LH	0752	& ON	01
40	6511555-10	. BRACKET ASSY-RH	0752	& ON	01
41	6511555-14	. CLIP	0752	& ON	02
42	6511555-13	. CLIP	0752	& ON	02

- ITEM NOT ILLUSTRATED

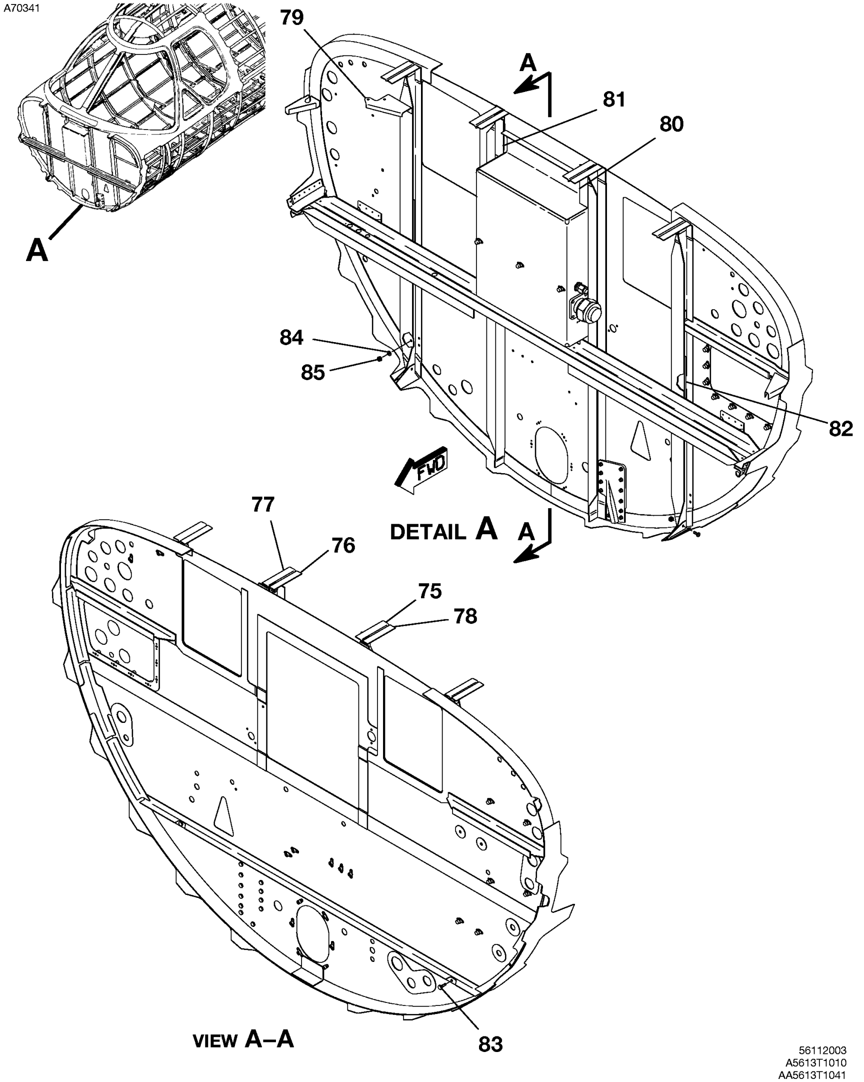

FORWARD PRESSURE BULKHEAD
FIGURE 02 (SHEET 2)

FIG ITEM	PART NUMBER	NOMENCLATURE 1 2 3 4 5 6 7			UNITS PER ASSY
02					
75	5511040-55	. ANGLE LH FSO 551040-107	0260	0649	NP
- 75A	5511040-107	. ANGLE LH	0650	& ON	01
76	5511040-53	. ANGLE LH FSO 551040-105	0260	0649	NP
- 76A	5511040-105	. ANGLE LH	0650	& ON	01
77	5511040-52	. ANGLE RH FSO 551040-106	0260	0649	NP
- 77A	5511040-106	. ANGLE RH	0650	& ON	01
78	5511040-54	. ANGLE RH FSO 551040-108	0260	0649	NP
- 78A	5511040-108	. ANGLE RH	0650	& ON	01
79	5517405-2	. BRACKET-PNEUMATIC BOTTLE MOUNT	0260	0633	01
- 79A	6314171-31	. BRACKET-PNEUMATIC BOTTLE MOUNT	0634	& ON	01
80	5511041-11	. SUPPORT LH FSO 5511041-15	0260	0649	NP
- 80A	5511041-15	. SUPPORT LH	0650	& ON	01
81	5511041-10	. SUPPORT RH FSO 5511041-14	0260	0649	NP
- 81A	5511041-14	. SUPPORT RH	0650	& ON	01
82	5511040-16	. ANGLE			04
83	AN3-5	. BOLT			02
84	NAS1149F0363P	. WASHER			02
85	MS21045L3	. NUT			02

- ITEM NOT ILLUSTRATED

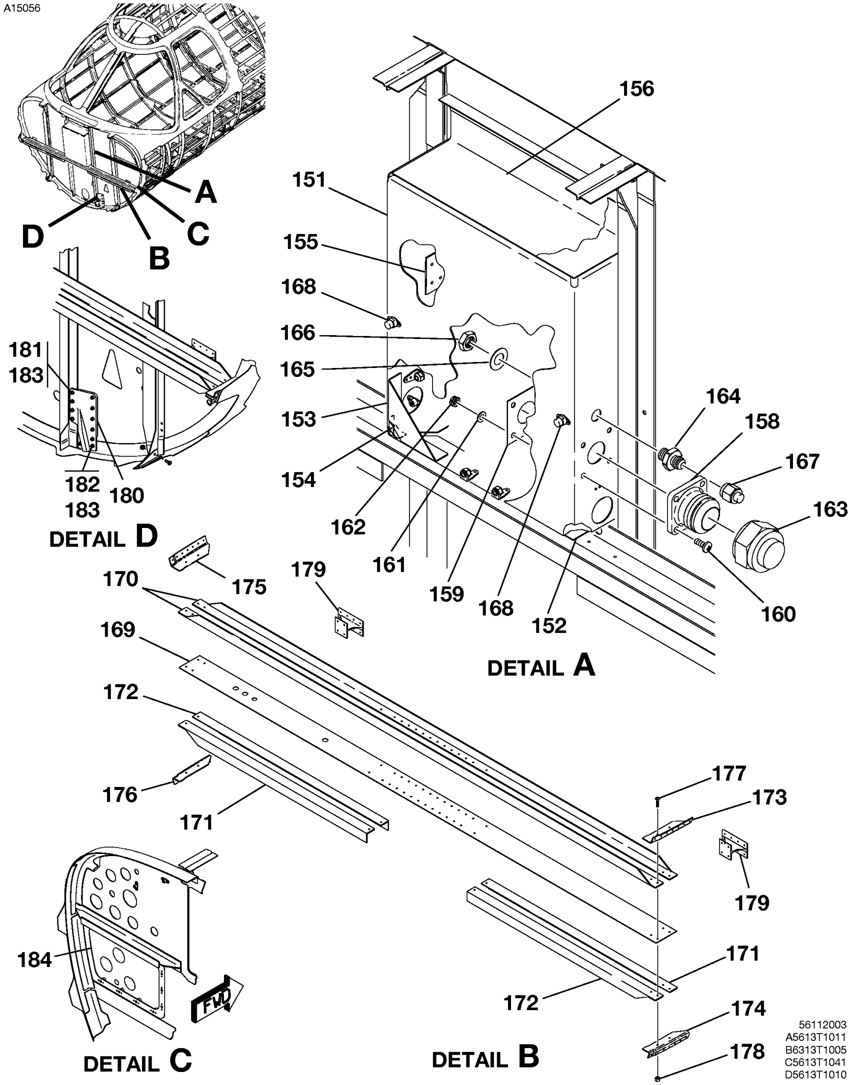

FORWARD PRESSURE BULKHEAD
FIGURE 02 (SHEET 3)

FIG ITEM	PART NUMBER	NOMENCLATURE 1 2 3 4 5 6 7			UNITS PER ASSY	
02						
- 150	5511040-102	. BOX ASSY			01	
151	5511040-103	. . BOX			01	
152	5511040-15	. . COVER			01	
153	5511040-61	. . CLIP			04	
154	5522330-2	. . CORNER SEAL SEAL-CORNER			04	
155	5511040-69	. . PLATE			01	
156	5511040-66	. . COVER-UPR TOP			01	
- 157		. . DELETED-NOT USED				
158	MS20760D20	. . CONNECTOR			01	
159	5511040-50	. . STIFFENER			01	
		ATTACHING PARTS				
160	MS27039-4-09	. . SCREW			04	
161	NAS1149F0416P	. . WASHER			04	
162	MS21083N4	. . NUT			04	
		—*—				
163	AN929A20	. . CAP ASSY			01	
164	MS21900D6	. . ADAPTER-FSO MS21900W6			NP	
- 164A	MS21900W6	. . ADAPTER-FOR SPARES ONLY			01	
165	NAS1149D0916K	. . WASHER			01	
166	AN924-6D	. . NUT-JAM			01	
167	AN929A6	. . CAP ASSY			01	
168	NAS1474A3	. . NUTPLATE			03	
169	5510005-8	. WEB-BULKHEAD BEAM SUPPORT			01	
170	5510006-1	. ANGLE			02	
171	5510006-2	. ANGLE-LH AND RH			02	
172	5510006-3	. ANGLE-LH AND RH			02	
173	5510005-3	. ANGLE LH-LH			01	
174	5510005-5	. ANGLE LH-LH			01	
175	5510005-4	. ANGLE RH-RH			01	
176	5510005-6	. ANGLE RH-RH			01	
		ATTACHING PARTS				
177	NAS221-10	. SCREW			04	
178	MS20365-1032C	. NUT			04	
		—*—				
179	5510005-7	. SUPPORT			02	
180	6511285-1	. FITTING-JACK PAD			01	
		ATTACHING PARTS				
181	AN3-3A	. BOLT			05	
182	AN3-4A	. BOLT			05	
183	MS21042L3	. NUT			10	
		—*—				
184	9664069-2	. FEEDTHRU PLATE ASSY-AVIONICS STANDARD REFER TO NOTE 1	0260	0400	01	
- 184A	9664081-2	. FEEDTHRU PLATE ASSY-AVIONICS STANDARD REFER TO NOTE 2	0401	0538	01	
- 184B	9664365-2	. FEEDTHRU PLATE ASSY-AVIONICS STANDARD	0539	0644	01	
- 184C	9664521-2	. FEED THRU PLATE ASSY-AVIONICS STANDARD	0645	0750	01	
- 184D	9664645-2	. FEEDTHRU PLATE-AVIONICS STANDARD	0752	& ON	01	
- 184E	9690454-2	. FEED THRU PLATE-AVIONICS STANDARD REFER TO NOTE 3 AND NOTE 4			01	
- 185	9664561-1	. PLATE ASSY-AVIONICS FEED THRU OPTIONAL			01	
- 186	9690574-3	. FEED THRU PLATE ASSY-AVIONICS STANDARD REFER TO NOTE 5	0260	& ON	01	R

NOTE 1—AIRPLANES -0260 THRU -0400 NOT INCORPORATING SB560-34-107.

NOTE 2—AIRPLANES -0401 THRU -0538 NOT INCORPORATING SB560-34-107.

NOTE 3—AIRPLANES -0260 THRU -0538 INCORPORATING SB560-34-107.

NOTE 4—AIRPLANES -0260 THRU -0538 INCORPORATING SB560-34-108.

NOTE 5—AIRPLANES -0260 AND ON INCORPORATING SB560-34-115 R

- ITEM NOT ILLUSTRATED

A15076

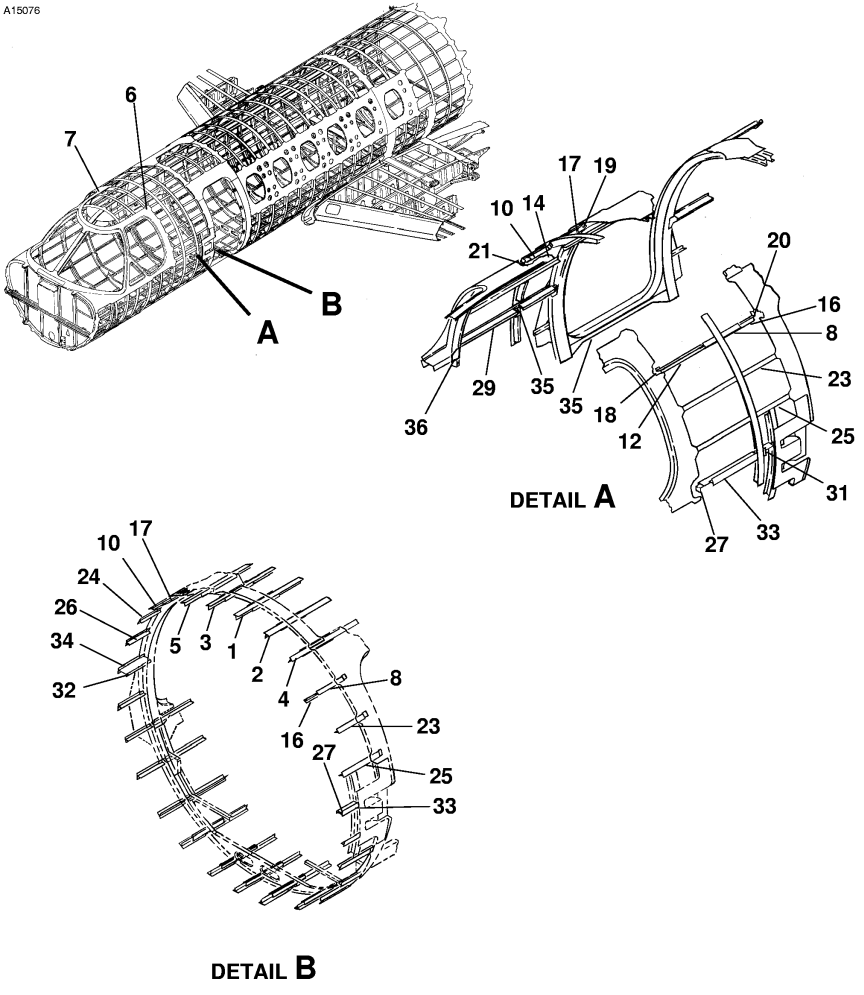

56112003
A65112012
B65111006

CABIN STRINGERS
FIGURE 01 (SHEET 1)

FIG ITEM	PART NUMBER	NOMENCLATURE 1 2 3 4 5 6 7			UNITS PER ASSY
01					
-		CABIN STRINGERS	0001	0538	RF
1	6511264-23	. STRINGER-FS134.98-FS179.02 BL0.00			01
2	6511264-21	. STRINGER-LH FS134.98-FS179.02 LBL7.60			01
3	6511264-22	. STRINGER-RH FS134.98-FS179.02 RBL7.60			01
4	6511264-19	. STRINGER-LH FS151.00-FS179.02 LBL14.75			01
5	6511264-20	. STRINGER-RH FS151.00-FS179.02 RBL14.75			01
6	5511016-47	. STRINGER-LH PILOTS WINDOW TO FS151.00			01
7	5511016-48	. STRINGER-RH PILOTS WINDOW TO FS151.00			01
8	6511264-17	. STRINGER-LH FS151.00-FS179.02	0001	0186	01
- 9	6511264-43	. STRINGER-LH FS151.00-FS179.02	0187	0538	01
10	6511264-18	. STRINGER-RH FS151.00-FS179.02	0001	0186	01
- 11	6511264-44	. STRINGER-RH FS151.00-FS179.02	0187	0538	01
12	6511016-23	. STRINGER-LH FS151.00-FS168.00 WL147.00	0001	0400	01
- 13	6511016-123	. STRINGER-LH FS151.00-FS168.00 WL147.00	0401	0538	01
14	6511016-80	. STRINGER-RH FS151.00-FS168.00 WL147.00	0001	0400	01
- 15	6511016-122	. STRINGER-RH FS151.00-FS168.00 WL147.00	0401	0538	01
16	5511016-72	. STRINGER-LH FS168.00-FS179.02 WL147.00			01
17	5511016-46	. STRINGER-RH FS168.00-FS179.02 WL147.00			01
18	5511016-51	. ANGLE-STRINGER SPLICE LH			01
19	5511016-51	. ANGLE-STRINGER SPLICE RH			02
20	5511016-50	. ANGLE-STRINGER SPLICE LH			02
21	5511016-50	. ANGLE-STRINGER SPLICE RH			01
- 22	5511016-49	. CAP-LH AND RH FS168.00 WL147.00			02
23	6511264-15	. STRINGER-LH FS151.00-FS179.02 WL141.30	0001	0536	01
- 23A	6511264-57	. STRINGER-LH FS151.00-FS179.02 WL141.30	0537	0538	01
24	6511264-16	. STRINGER-RH FS151.00-FS179.02 WL141.30	0001	0536	01
- 24A	6511264-56	. STRINGER-RH FS151.00-FS179.02 WL141.30	0537	0538	01
25	6511264-13	. STRINGER-LH FS151.00-FS179.02 WL134.50	0001	0536	01
- 25A	6511264-55	. STRINGER-LH FS151.00-FS179.02 WL134.50	0537	0538	01
26	6511264-14	. STRINGER-RH FS151.00-FS179.02 WL134.50	0001	0536	01
- 26A	6511264-54	. STRINGER-RH FS151.00-FS179.02 WL134.50	0537	0538	01
27	6511016-21	. STRINGER-LH FS151.00-FS168.00 WL127.00	0001	0400	01
- 28	6511016-121	. STRINGER-LH FS151.00-FS168.00 WL127.00	0401	0538	01
29	6511016-78	. STRINGER-RH FS151.00-FS168.00 WL127.00	0001	0400	01
- 30	6511016-120	. STRINGER-RH FS151.00-FS168.00 WL127.00	0401	0538	01
31	5511016-73	. STRINGER-LH FS168.00-FS171.00 WL127.00			01
32	5511016-26	. STRINGER-RH FS168.00-FS179.02 WL127.00			01
33	6511264-11	. STRINGER-LH FS151.00-FS171.80 WL127.00	0001	0536	01
- 33A	6511264-53	. STRINGER-LH FS151.00-FS171.80 WL127.00	0537	0538	01
34	6511264-12	. STRINGER-RH FS151.00-FS177.02 WL127.00	0001	0536	01
- 34A	6511264-52	. STRINGER-RH FS151.00-FS177.02 WL127.00	0537	0538	01
35	5511139-1	. ANGLE-STRINGER SPLICE LH AND RH			10
36	5511016-24	. CAP-STRINGER SPLICE LH AND RH	0001	0259	02
- 37	6511257-7	. CAP-STRINGER SPLICE LH	0260	0538	01
- 38	6511257-8	. CAP-STRINGER SPLICE RH	0260	0538	01
- 39	6511257-9	. CAP-STRINGER SPLICE LH AND RH	0260	0538	02

- ITEM NOT ILLUSTRATED

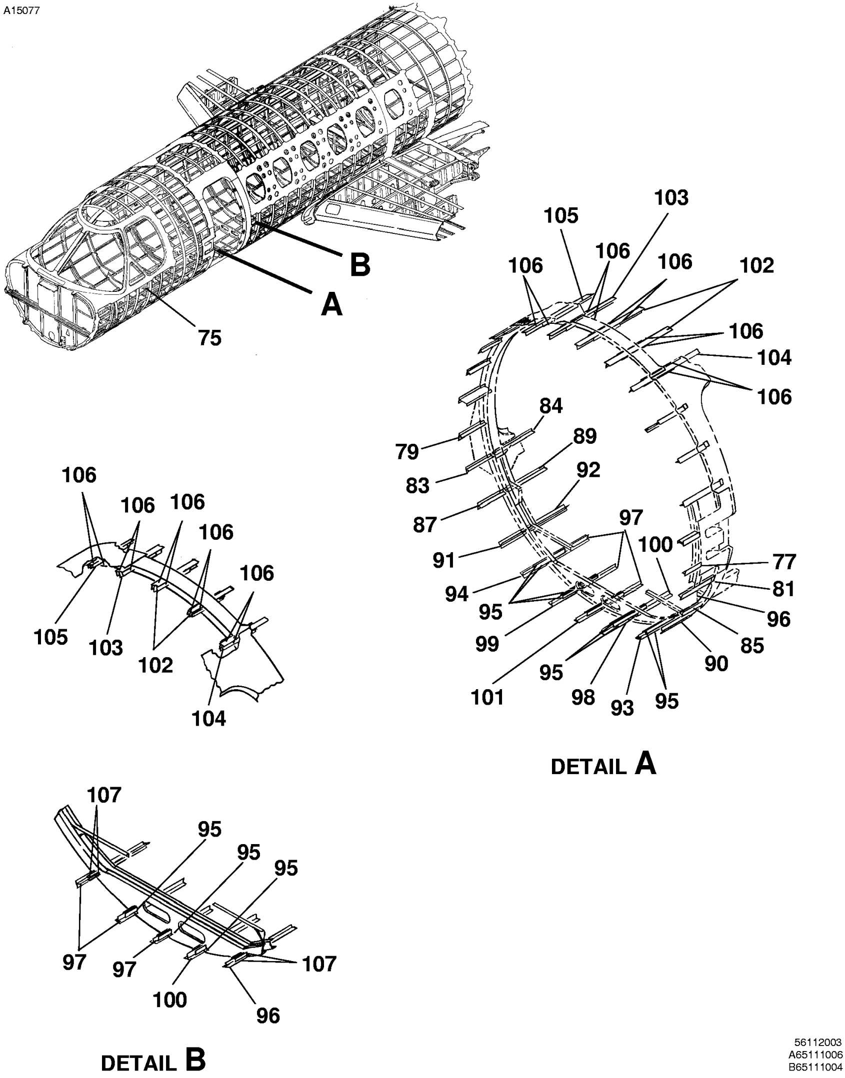

CABIN STRINGERS
FIGURE 01 (SHEET 2)

FIG ITEM	PART NUMBER	NOMENCLATURE 1 2 3 4 5 6 7			UNITS PER ASSY
01					
75	6511257-5	. STRINGER-LH			01
- 76	6511257-6	. STRINGER-RH			01
77	6511264-9	. STRINGER-LH FS94.00-FS171.80 WL119.20	0001	0436	01
- 78	6511264-51	. STRINGER-LH FS94.00-FS171.80 WL119.20	0537	0538	01
79	6511264-32	. STRINGER-RH FS94.00-FS179.02 WL119.20	0001	0436	01
- 80	6511264-50	. STRINGER-RH FS94.00-FS179.02 WL119.20	0537	0538	01
81	6511264-7	. STRINGER-LH FS94.00-FS179.02 WL111.60	0001	0536	01
- 82	6511264-49	. STRINGER-LH FS94.00-FS179.02 WL111.60	0537	0538	01
83	6511264-30	. STRINGER-RH FS94.00-FS179.02 WL111.60			01
84	6511015-150	. STRINGER-RH FS179.02-FS206.98			01
85	6511264-5	. STRINGER-LH FS94.00-FS179.02 WL104.80	0001	0536	01
- 86	6511264-47	. STRINGER-LH FS94.00-FS179.02 WL104.80	0537	0538	01
87	6511264-6	. STRINGER-RH FS94.00-FS179.02 WL104.80	0001	0536	01
- 88	6511264-46	. STRINGER-RH FS94.00-FS179.02 WL104.80	0537	0538	01
89	6511015-152	. STRINGER-RH FS179.02-FS206.98 WL104.80			01
90	6511264-3	. STRINGER-LH FS94.00-FS179.02 LBL21.20			01
91	6511264-4	. STRINGER-RH FS94.00-FS179.02 RBL21.20			01
92	6511015-154	. STRINGER-RH FS179.02-FS206.98 RBL21.20			01
93	6511264-25	. STRINGER-LH FS94.00-FS206.98 LBL14.85			01
94	6511264-26	. STRINGER-RH FS94.00-FS206.98 LBL14.85			01
95	6511015-123	. STRAP-SPLICE			16
96	6511015-153	. STRINGER-LH FS179.02-FS206.98			01
97	6511015-149	. STRINGER-RH FS179.02-FS206.98 RBL14.85 RBL7.65 AND BL0.00			03
98	6511264-27	. STRINGER-LH FS94.00-FS179.02 LBL7.65			01
99	6511264-28	. STRINGER-RH FS94.00-FS179.02 RBL7.65			01
100	6511015-151	. STRINGER-LH FS94.00-FS179.02 LBL7.65			01
101	6511264-29	. STRINGER-LH FS94.00-FS179.02 BL0.00			01
102	6511015-157	. STRINGER-UPPER FS179.02-FS206.98 BL0.00 AND LBL7.60			02
103	6511015-158	. STRINGER-RH FS179.02-FS206.98 RBL7.60			01
104	6511015-155	. STRINGER-LH FS179.02-FS206.98 LBL14.75			01
105	6511015-156	. STRINGER-RH FS179.02-FS206.98 LBL14.75			01
106	6511060-106	. STRAP-SPLICE			20
107	6511229-5	. STRAP-SPLICE			04

- ITEM NOT ILLUSTRATED

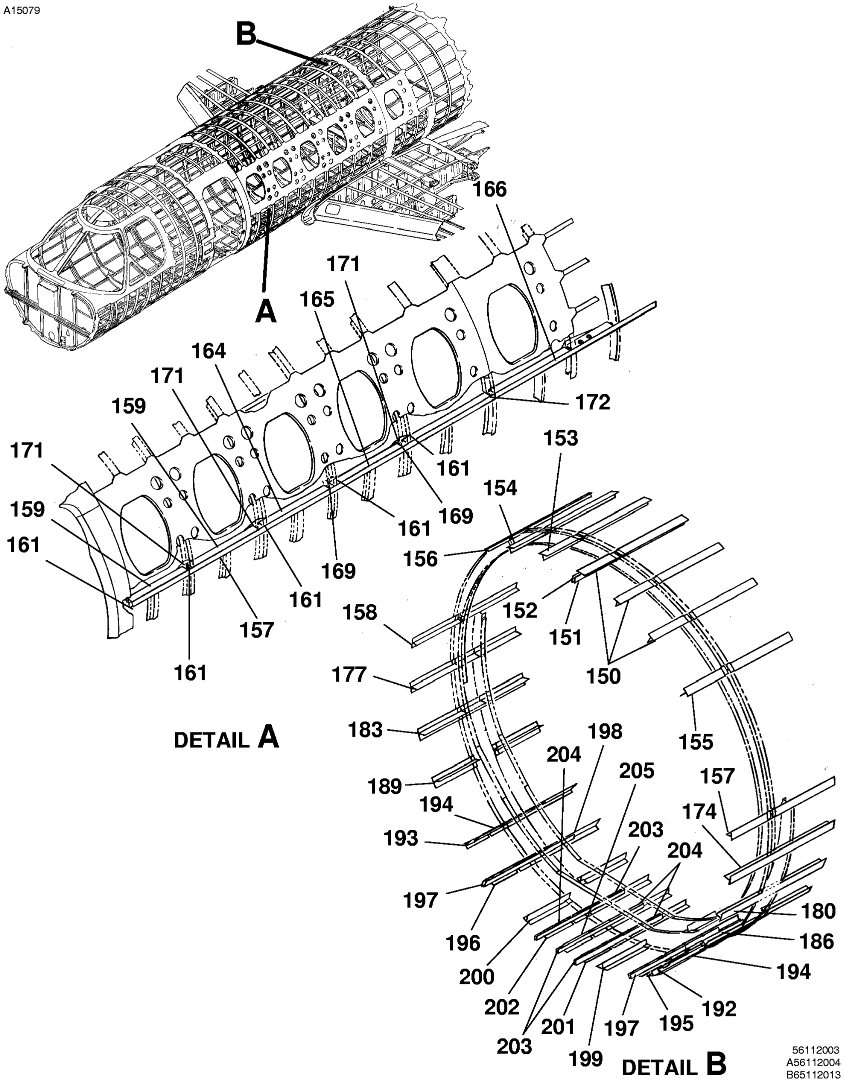

CABIN STRINGERS
FIGURE 01 (SHEET 3)

FIG ITEM	PART NUMBER	NOMENCLATURE 1 2 3 4 5 6 7			UNITS PER ASSY	
01						
150	6511230-19	. STRINGER-FS206.98-FS307.78 BL0.00, LBL7.60 AND LBL14.75			03	
151	6511015-89	. STIFFENER			05	
152	6511015-88	. STIFFENER			05	
153	6511230-18	. STRINGER-RH FS206.98-FS307.78 RBL7.60			01	
154	6511230-20	. STRINGER-RH FS206.98-FS307.78 RBL14.75			01	
155	6511230-1	. STRINGER-LH FS206.98-FS307.78 WL147.00	0001	0259	01	
156	6511230-2	. STRINGER-RH FS206.98-FS307.78 WL147.00	0001	0259	01	
157	6511230-3	. STRINGER-LH FS206.98-FS307.78 WL127.00	0001	0259	01	
158	6511230-4	. STRINGER-RH FS206.98-FS307.78 WL127.00	0001	0259	01	
159	6511257-3	. STRINGER-LH FS206.98-FS225.23 AND FS225.23-FS243.40 WL127.0			02	
- 160	6511257-4	. STRINGER-RH FS206.98-FS225.23 AND FS225.23-FS243.40 WL127.0			02	
161	5511016-63	. CLIP-ANGLE LH			08	
- 162	5511016-63	. CLIP-ANGLE RH			11	
- 163	6511016-3	. STRINGER-LH FS243.40-FS263.40 AND FS263.40-FS 283.40 WL127.0	0001	0205	02	
164	6511016-115	. STRINGER-LH FS243.40-FS263.40 WL127.0	0206	0538	01	
165	6511016-3	. STRINGER-LH FS263.40-FS283.40 WL127.0	0206	0538	01	
166	6511016-5	. STRINGER-LH FS283.40-FS307.78	0001	0538	01	
- 167	6511016-4	. STRINGER-RH FS243.40-FS263.40 AND FS263.40-FS283.40			02	
- 168	6511016-6	. STRINGER-RH FS283.40-FS307.78			01	
169	5511016-64	. CLIP-ANGLE LH			11	
- 170	5511016-64	. CLIP-ANGLE RH			08	
171	5511016-21	. CAP-STRINGER SPLICE			06	
172	6511016-93	. ANGLE-LH			01	
- 173	6511016-94	. ANGLE-RH			01	
174	6511230-5	. STRINGER-LH FS206.98-FS307.78 WL119.20	0001	0200	01	
- 175	DDA0055-1	. STRAP-STRINGER REINFORCEMENT REF 6511229 REFER TO NOTE 1	0001	0052	01	R
- 176	6511230-21	. STRINGER-LH FS206.98-FS307.78 WL119.20	0201	0259	01	
177	6511230-6	. STRINGER-RH FS206.98-FS307.78 WL119.20	0001	0200	01	
- 178	DDA0055-1	. STRAP-STRINGER REINFORCEMENT REF 6511229 REFER TO NOTE 1	0001	0052	01	R
- 179	6511230-22	. STRINGER-RH FS206.98-FS307.78 WL119.20	0201	0259	01	
180	6511230-7	. STRINGER-LH FS206.98-FS307.78 WL111.60	0001	0200	01	
- 181	DDA0055-1	. STRAP-STRINGER REINFORCEMENT REF 6511229 REFER TO NOTE 1	0001	0052	01	R
- 182	6511230-23	. STRINGER-LH FS206.98-FS307.78 WL111.60	0201	0259	01	
183	6511230-8	. STRINGER-RH FS206.98-FS307.78 WL111.60	0001	0200	01	
- 184	DDA0055-1	. STRAP-STRINGER REINFORCEMENT REF 6511229 REFER TO NOTE 1	0001	0052	01	R
- 185	6511230-24	. STRINGER-RH FS206.98-FS307.78 WL111.60	0201	0259	01	
186	6511230-9	. STRINGER-LH FS206.98-FS307.78 WL104.50	0001	0200	01	
- 187	DDA0055-1	. STRAP-STRINGER REINFORCEMENT REF 6511229 REFER TO NOTE 1	0001	0052	01	R
- 188	6511230-25	. STRINGER-LH FS206.98-FS307.78 WL104.50	0201	0259	01	
189	6511230-10	. STRINGER-RH FS206.98-FS307.78 WL104.50	0001	0200	01	
- 190	DDA0055-1	. STRAP-STRINGER REINFORCEMENT REF 6511229 REFER TO NOTE 1	0001	0052	01	R
- 191	6511230-26	. STRINGER-RH FS206.98-FS307.78 WL104.50	0201	0259	01	
192	6511230-11	. STRINGER-LH FS206.98-FS304.35 LBL21.20			01	
193	6511230-12	. STRINGER-RH FS206.98-FS304.35 RBL21.20			01	
194	6511015-87	. STRAP-SPLICE			04	
195	6511230-13	. STRINGER-LH FS206.98-FS304.35 LBL15.35			01	
196	6511230-14	. STRINGER-RH FS206.98-FS304.35 RBL15.35			01	
197	6511015-86	. STRAP-SPLICE			02	
198	6511015-85	. STRAP-SPLICE			02	
199	6511230-15	. STRINGER-LH FS206.98-FS307.78 LBL7.65			01	
200	6511230-16	. STRINGER-RH FS206.98-FS307.78 RBL7.65			01	
201	6511015-9	. STRINGER-LH FS283.40-FS304.35 LBL4.30			01	
202	6511015-10	. STRINGER-RH FS283.40-FS304.35 RBL4.30			01	
203	6511015-80	. STRAP-SPLICE			03	
204	6511015-69	. STRAP-SPLICE			03	
205	6511230-17	. STRINGER-LOWER FS206.98-FS304.35 BLO.00			01	

NOTE 1—WHEN ORDERING DDA PART NUMBERS, ALSO PROVIDE REFERENCE DRAWING NUMBER SHOWN IN NOMENCLATURE. R

- ITEM NOT ILLUSTRATED

A15081

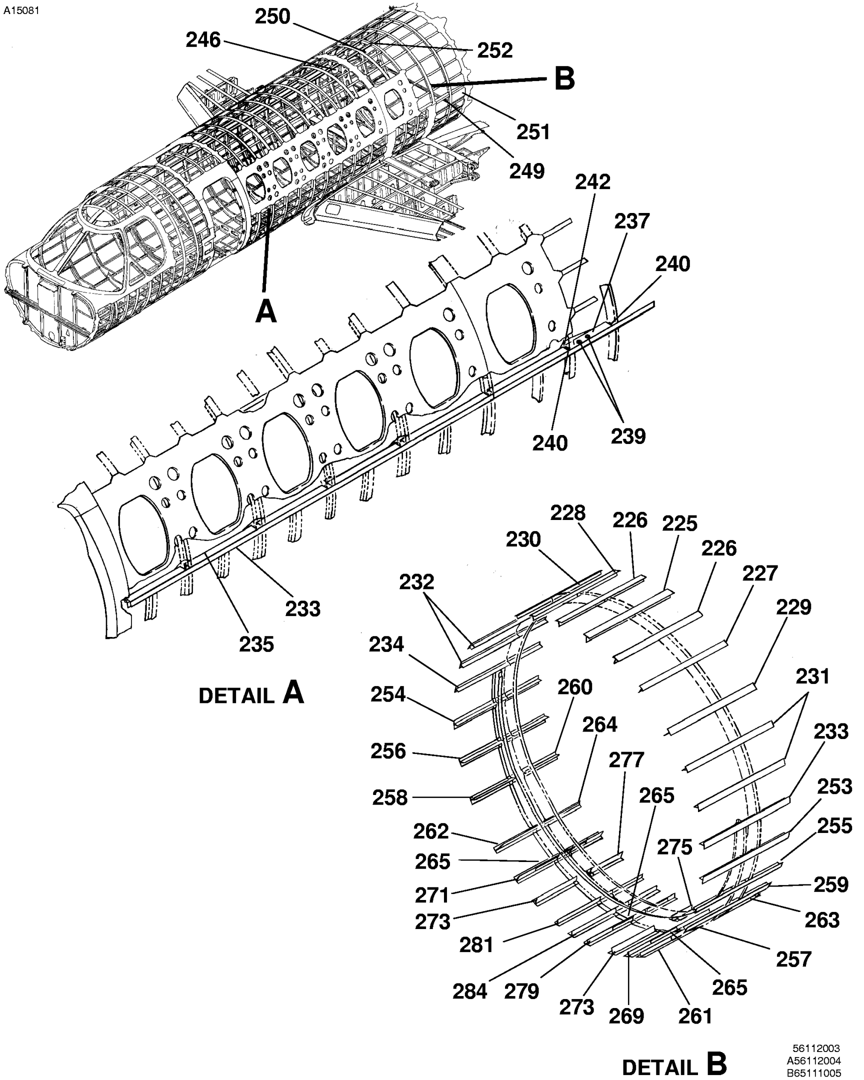

CABIN STRINGERS
FIGURE 01 (SHEET 4)

FIG ITEM	PART NUMBER	NOMENCLATURE 1 2 3 4 5 6 7			UNITS PER ASSY
01					
225	6511015-141	. STRINGER-FS307.78-FS365.00 BL0.00			01
226	6511015-72	. STRINGER-FS307.78-FS365.00 BL7.60			02
227	6511015-99	. STRINGER-LH FS307.78-FS365.00 LBL14.75			01
228	6511015-100	. STRINGER-RH FS307.78-FS365.00 RBL14.75			01
229	6511015-217	. STRINGER-LH FS307.78-FS365.00 WL147.00			01
230	6511015-218	. STRINGER-RH FS307.78-FS365.00 WL147.00			01
231	6511015-33	. STRINGER-LH FS329.12-FS365.00 WL141.30 AND WL134.50			02
232	6511015-92	. STRINGER-RH FS329.12-FS365.00 WL141.30 AND WL134.50			02
233	6511015-101	. STRINGER-LH FS307.78-FS365.00 WL127.00			01
234	6511015-70	. STRINGER-RH FS307.78-FS365.00 WL127.00			01
235	6511016-7	. STRINGER-LH FS307.78-FS329.12 WL127.00			01
- 236	6511016-8	. STRINGER-RH FS307.78-FS329.12 WL127.00			01
237	6511016-109	. STRINGER-LH FS329.12-FS340.69 WL127.00			01
- 238	6511016-10	. STRINGER-RH FS329.12-FS340.69 WL127.00			01
239	NAS557-4A	. GROMMET			02
240	5511016-64	. CLIP-ANGLE			04
- 241	5511016-63	. CLIP-ANGLE			04
242	6511016-103	. CAP ASSY-LH STRINGER SPLICE			01
- 243	6511016-104	. CAP ASSY-RH STRINGER SPLICE			01
- 244	MS21075L3N	. . NUTPLATE			04
- 245	MS21075L3N	. NUTPLATE			04
246	6511016-15	. CAP-STRINGER SPLICE LH	0001	0071	02
- 247	6511016-110	. CAP-STRINGER SPLICE LH	0072	0538	02
- 248	6511016-15	. CAP-STRINGER SPLICE RH			02
249	6511016-73	. STRINGER-LH FS340.69-FS353.00 WL127.00			01
250	6511016-72	. STRINGER-RH FS340.69-FS353.00 WL127.00			01
251	6511016-13	. STRINGER, LH-FS 353.00-FS 365.00 WL 127.00	0001	0637	01
- 251A	6511016-125	. STRINGER, LH-FS 353.00-FS 365.00 WL 127	0638	0654	01
- 251B	6511016-127	. STRINGER, LH-FS 353.00-FS 365.00 WL 127	0655	& ON	01
252	6511016-14	. STRINGER-RH FS353.00-FS365.00 WL127.00			01
253	6511015-93	. STRINGER-LH FS307.78-FS365.00 WL119.20			01
254	6511015-94	. STRINGER-RH FS307.78-FS365.00 WL119.20			01
255	6511015-131	. STRINGER-LH FS312.02-FS365.00 WL111.60			01
256	6511015-132	. STRINGER-RH FS312.02-FS365.00 WL111.60			01
257	6511015-133	. STRINGER-LH FS312.02-FS337.59 WL104.50			01
258	6511015-134	. STRINGER-RH FS312.02-FS337.59 WL104.50			01
259	6511015-142	. STRINGER-LH FS340.69-FS365.00 WL104.50			01
260	6511015-138	. STRINGER-RH FS340.69-FS365.00 WL104.50			01
261	6511015-135	. STRINGER-LH FS304.35-FS337.59 LBL21.20			01
262	6511015-136	. STRINGER-RH FS304.35-FS337.59 RBL21.20			01
263	6511015-143	. STRINGER-LH FS340.69-FS365.00 LBL21.20			01
264	6511015-144	. STRINGER-RH FS340.69-FS365.00 RBL21.20			01
265	6511015-117	. STIFFENER LBL AND RBL 15.35			02
- 266	6511015-112	. STIFFENER LBL AND RBL 15.35 FSO 6511015-408	0001	0204	NP
- 267	6511015-408	. STIFFENER LBL AND RBL 15.35	0205	0538	02
- 268	6511015-110	. SPACER-FS337.59-FS340.69 BL15.35			02
269	6511015-195	. STRINGER-LH FS304.35-FS365.00 LBL15.35	0260	0482	01
- 270	6511015-427	. STRINGER-LH FS304.35-FS365.00 LBL15.35	0483	0538	01
271	6511015-196	. STRINGER-RH FS304.35-FS365.00 RBL15.35	0260	0482	01
- 272	6511015-426	. STRINGER-RH FS304.35-FS365.00 RBL15.35	0483	0538	01
273	6511015-13	. STRINGER-FS312.02-FS337.09 BL10.12	0260	0482	02
- 274	6511015-425	. STRINGER-FS312.02-FS337.09 BL10.12	0483	0538	02
275	6511015-197	. STRINGER-LH FS340.69-FS365.00 LBL10.12	0260	0482	01
- 276	6511015-429	. STRINGER-LH FS340.69-FS365.00 LBL10.12	0483	0538	01
277	6511015-198	. STRINGER-RH FS340.69-FS365.00 RBL10.12	0260	0482	01
- 278	6511015-428	. STRINGER-RH FS340.69-FS365.00 RBL10.12	0483	0538	01
279	6511015-11	. STRINGER-LH FS304.35-FS365.00 LBL4.30	0260	0482	01
- 280	6511015-421	. STRINGER-LH FS304.35-FS365.00 LBL4.30	0483	0538	01
281	6511015-12	. STRINGER-RH FS304.35-FS365.00 RBL4.30	0260	0482	01
- 282	6511015-424	. STRINGER-RH FS304.35-FS365.00 RBL4.30	0483	0538	01
- 283	6511015-79	. STIFFENER-LBL AND RBL 4.30			02
284	6511015-6	. STRINGER-FS304.35-FS365.00 BL0.00	0260	0482	01
- 285	6511015-430	. STRINGER-FS304.35-FS365.00 BL0.00	0483	0538	01

- ITEM NOT ILLUSTRATED

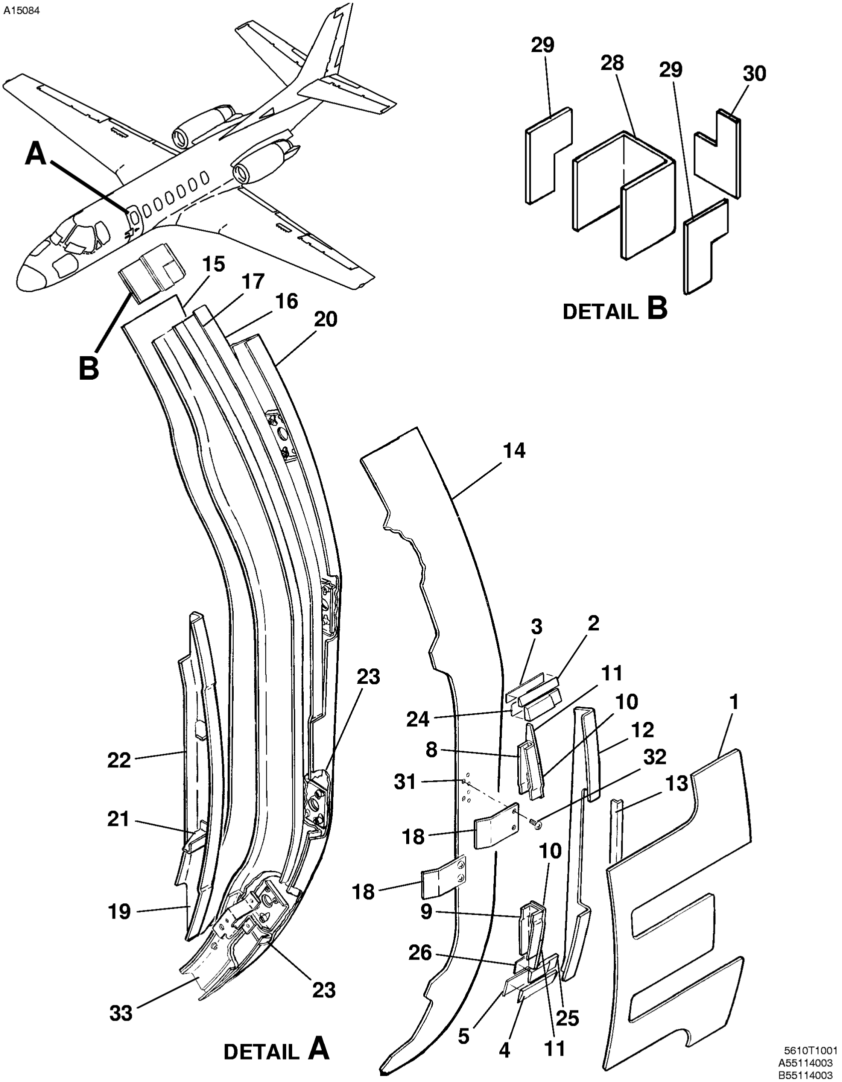

CABIN DOORFRAME
FIGURE 01 (SHEET 1)

FIG ITEM	PART NUMBER	NOMENCLATURE 1 2 3 4 5 6 7			UNITS PER ASSY
01					
-		CABIN DOORFRAME			RF
1	5511241-3	. SKIN DOUBLER-OUTBOARD DOOR FRAME			01
2	5511233-79	. SPACER			01
3	5511233-61	. SHIM			AR
4	5511233-80	. SPACER			01
5	5511233-60	. SHIM			AR
- 6	5511233-42	. CHANNEL ASSY-UPPER			01
- 7	5511233-41	. CHANNEL ASSY-LOWER			01
8	5511233-30	. . CHANNEL-UPPER			01
9	5511233-29	. . CHANNEL-LOWER			01
10	5511233-40	. . PLATE-CHANNEL			01
11	5511233-43	. . PLATE-CHANNEL			01
12	5511233-5	. FORMER-SUPPORT			01
- 12A	5511241-25	. SEAL-RAIN FSO 5511247-4	0001	0179	NP
13	5511247-4	. SEAL-RAIN	0180	& ON	01
14	5511241-5	. OUTER BAND			01
15	5511241-18	. INNER BAND BAND			01
16	5511233-2	. FRAME-DOOR FS174.77 FSO 6511324-1	0001	0648	NP
- 16A	6511324-2	. FRAME- F.S. 180.77-DOOR	0649	& ON	01
17	5511233-3	. FRAME-DOOR FS173.02 FSO 6511324-2	0001	0648	NP
- 17A	6511324-3	. FRAME- F.S. 179.02-DOOR	0649	& ON	01
18	5511241-12	. TAB-DOOR HINGE			02
19	5511233-4	. FRAME-DOOR FS173.02			01
20	5511233-1	. FWD DOOR POST FSO 6511324-1	0001	0648	NP
21	5511241-2	. CLIP			01
22	5511233-28	. CLIP			01
23	5511233-44	. SPLICE-DOUBLER			01
24	5511233-59	. SHIM			AR
25	5511233-24	. SHIM-FILLER			01
26	5511233-58	. SHIM			AR
- 27	5511233-25	. SHIM-FILLER			01
28	5511241-14	. SPLICE			01
29	5511241-15	. SHIM			02
30	5511241-16	. SHIM			01
31	MS21073L08	. NUTPLATE			04
32	MS24694-S1	. SCREW			04
33	5511233-44	. SPLICE			01
- 34	5511237-57	. SPACER			AR
- 35	5511241-27	. FWD FITTING	0539	& ON	01
- 36	5511152-19	. AFT FITTING	0539	& ON	01
- 37	MS21071L3	. . NUTPLATE USED ON AFT AND FWD FITTINGS	0539	& ON	08

- ITEM NOT ILLUSTRATED

A15078

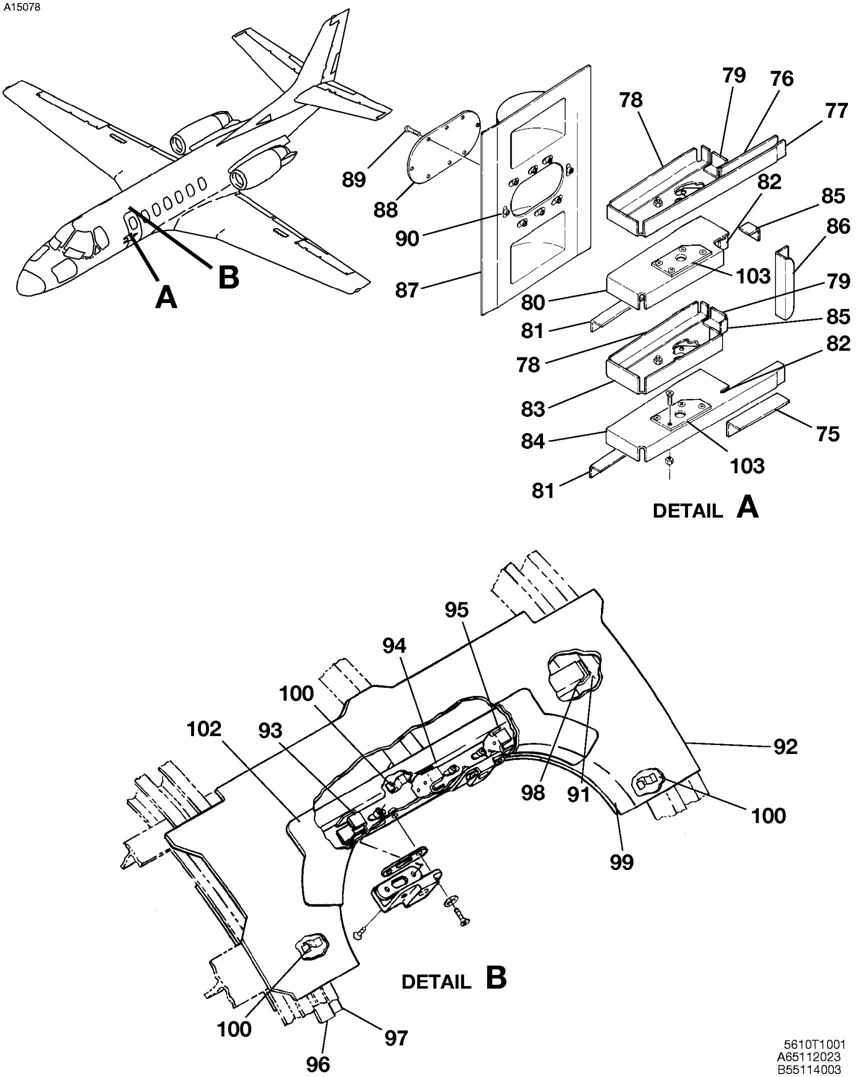

CABIN DOORFRAME
FIGURE 01 (SHEET 2)

FIG ITEM	PART NUMBER	NOMENCLATURE 1 2 3 4 5 6 7			UNITS PER ASSY
01					
75	5511233-73	. CLIP CLIP-DOUBLER SUPPORT			01
76	5511233-74	. CLIP CLIP-SKIN SUPPORT			01
77	5511233-66	. INTERCOSTAL			01
78	5511233-70	. ANGLE	0001	0645	02
- 78A	5511233-70	. ANGLE-UPPER	0646	& ON	01
- 78B	5511233-84	. ANGLE-MID LOWER	0646	& ON	01
79	5511233-78	. CLIP			02
80	5511233-68	. INTERCOSTAL			01
81	5511233-69	. ANGLE	0001	0645	02
- 81A	5511233-69	. ANGLE-MID UPPER	0646	& ON	01
- 81B	5511233-83	. ANGLE-LOWER	0646	& ON	01
82	5511233-77	. CLIP			02
83	5511233-67	. INTERCOSTAL			01
84	5511233-65	. INTERCOSTAL			01
85	5511233-21	. ANGLE ANGLE-SUPPORT			02
86	5511233-33	. CHANNEL-DOOR FRAME			01
87	5511233-6	. COVER ASSY-DOOR HINGE			01
88	5511233-62	. COVER ASSY-BONDED PLATE			01
		ATTACHING PARTS			
89	MS35207-263	. SCREW			08
		—*—			
- 89A	5511233-63	. . SEAL			01
90	MS21076L3	. NUTPLATE			08
91	5511240-5	. CLIP			02
92	5511240-2	. LINTEL OUTBD			01
93	5511240-7	. BRACE FWD			01
94	5511240-6	. BRACE CENTER			01
95	5511240-8	. BRACE AFT			01
96	5511240-9	. SPLICE-PLATE			02
97	5511240-10	. STRAP-SUPPORT			02
98	5511240-4	. CHANNEL			01
99	5511240-3	. LINTEL INBD			01
100	5511240-13	. BRACKET-HEADLINER	0001	0205	03
- 101	5511240-200	. LINTEL SCUFF GUARD	0001	0204	01
102	5511240-14	. LINTEL SCUFF GUARD	0205	& ON	01
103		. BEARING BLOCK REFER TO 52-10-00 FIGURE 04			RF

- ITEM NOT ILLUSTRATED

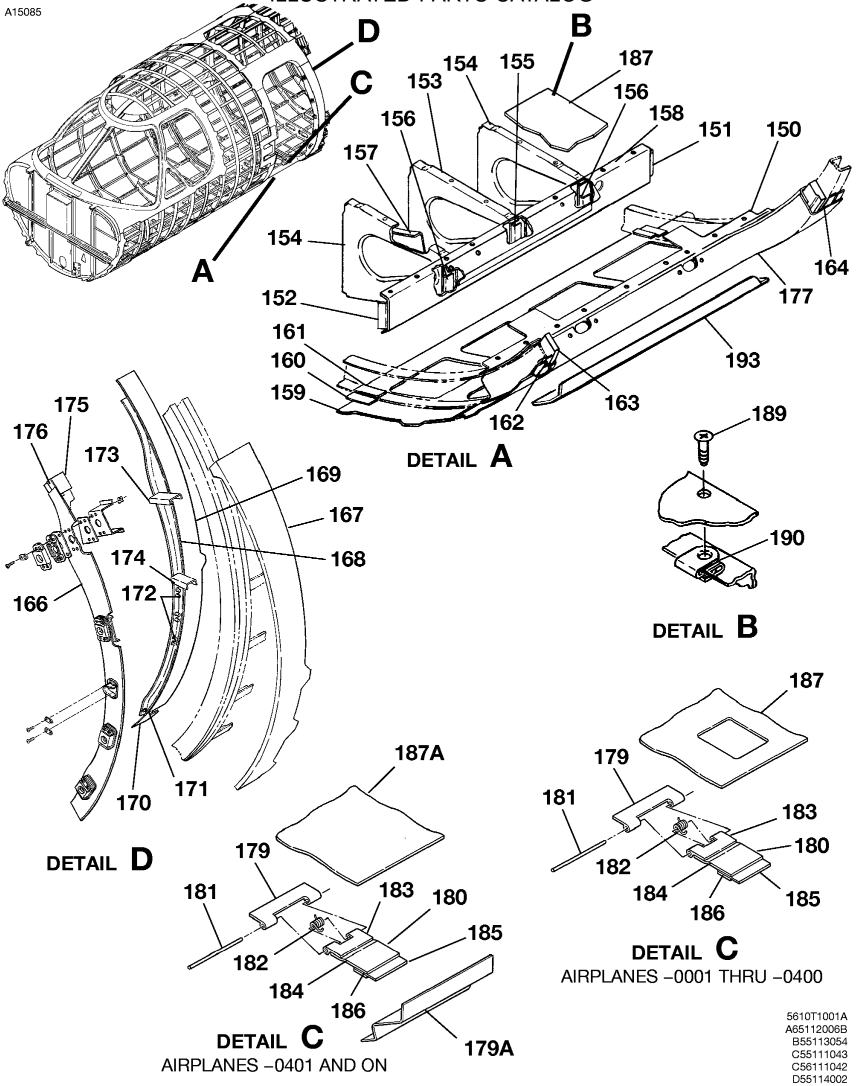

CABIN DOORFRAME
FIGURE 01 (SHEET 3)

FIG ITEM	PART NUMBER	NOMENCLATURE 1 2 3 4 5 6 7			UNITS PER ASSY
01					
150	5511249-3	. THRESHOLD INBD			01
151	5511239-10	. ANGLE FS199.23			01
152	5511239-9	. ANGLE FS174.77			01
153	5511249-12	. RIB-FLOORBOARD SUPPORT	0001	0538	01
- 153A	5511249-20	. RIB-FLOORBOARD SUPPORT	0539	& ON	01
154	5511249-11	. RIB-FLOORBOARD SUPPORT	0001	0538	02
- 154A	5511249-21	. RIB-FLOORBOARD SUPPORT	0539	& ON	02
155	5511239-34	. ANGLE-FLOORBOARD SUPPORT			01
156	5511239-35	. ANGLE			02
157	5511239-53	. SPLICE			01
158	5511239-47	. CHANNEL	0001	0463	01
- 158A	5511239-49	. CHANNEL	0464	& ON	01
159	5511239-3	. DOUBLER			01
160	5511239-21	. SPLICE-PLATE			04
161	5511239-20	. STRAP			04
162	5511239-27	. FILLER FWD FILLER			01
163	5511239-38	. FILLER			01
164	5511239-39	. FILLER			01
- 165	5511152-2	. DOOR POST ASSY-FRAME AFT FSO 5511152-23	0001	0787	NP
- 165A	5511152-23	. DOOR POST ASSY-FRAME AFT	0788	& ON	01
166	5511152-3	. . DOOR POST			01
167	5511152-14	. . OUTBD BAND			01
168	5511152-5	. . ZEE BHD-DOOR POST			01
169	5511152-200	. . FRAME UPR-BAND INBD			01
170	5511152-7	. . BAND INBD LWR	0001	0787	01
- 170A	5511152-24	. . BAND INBD LWR	0788	& ON	01
171	NAS1329S06-240	. NUT			01
172	NAS1329S06-120	. NUT			06
173	5511152-8	. CHANNEL	0001	0506	NP
- 173A	5511152-21	. CHANNEL	0507	& ON	01
174	5511152-9	. CHANNEL	0001	0506	NP
- 174A	5511152-22	. CHANNEL	0507	& ON	01
175	5511152-15	. SPLICE-PLATE			01
176	5511152-16	. SHIM			01
177	5511249-14	. THRESHOLD			01
- 178	5511249-13	. STIFFENER	0001	0459	01
- 178A	5511249-19	. STIFFENER	0460	& ON	01
179	5511239-33	. HINGE	0001	0400	01
179A	6519009-23	. BRACKET ASSY-STOP	0401	& ON	01
- 179B	5511239-33	. HINGE HINGE USED WITH 4819719-2 STEP ASSY	0442	0486	01
180	5511239-40	. DOOR ASSY	0001	0400	01
- 180A	5511239-40	. DOOR ASSY USED WITH 4819719-2 STEP ASSY	0442	0486	01
181	MS20253-2-200	. HINGE PIN-DOOR ASSY ATTACH	0001	0400	01
- 181A	MS20253-2-200	. HINGE PIN-DOOR ASSY ATTACH USED WITH 4819719-2 STEP ASSY	0442	0486	01
182	S147	. SPRING-DOOR ASSY ATTACH	0001	0400	01
- 182A	S147	. SPRING-DOOR ASSY ATTACH USED WITH 4819719-2 STEP ASSY	0442	0486	01
183	5511239-32	. . HINGE	0001	0400	01
184	5511239-42	. . RUB STRIP	0001	0400	01
185	5511239-43	. . FLEX STRIP	0001	0400	01
186	5511239-44	. . REINFORCE PLATE	0001	0400	01
- 186A	5511239-44	. . REINFORCE PLATE-USED WITH 4819719-2 STEP ASSY	0442	0486	01
187	5511239-46	. FLOORBOARD REFER TO NOTE 1	0001	0400	01
187A	5511239-48	. FLOORBOARD REFER TO NOTE 2	0401	0513	01
- 187B	5511239-46	. FLOORBOARD USED WITH 4819719-2 STEP ASSY	0442	0486	01
- 187C	5511239-50	. FLOORBOARD ASSY.	0514	0538	01
- 187D	5511239-54	. FLOORBOARD ASSY.	0539	& ON	01
- 188	MS27039-1-08	. SCREW-FLOORBOARD ATTACH			01
189	MS27039-1-04	. SCREW-FLOORBOARD ATTACH			24
190	S1477-3	. NUT-CLIP FLOORBOARD ATTACH			24
- 191	5511249-201	. THRESHOLD SCUFF GUARD	0001	0204	01
- 192	5511249-15	. THRESHOLD SCUFF GUARD	0205	0237	01
193	5511249-17	. THRESHOLD SCUFF GUARD	0238	& ON	01

NOTE 1—AIRPLANES -0001 THRU -0400 INCORPORATING SB560-52-08. R

NOTE 2—AIRPLANES -0401 THRU -0513 AND AIRPLANES -0054, -0084 AND -0226 AND AIRPLANES -0001 THRU -0400 INCORPORATING SB560-52-08. R

- ITEM NOT ILLUSTRATED

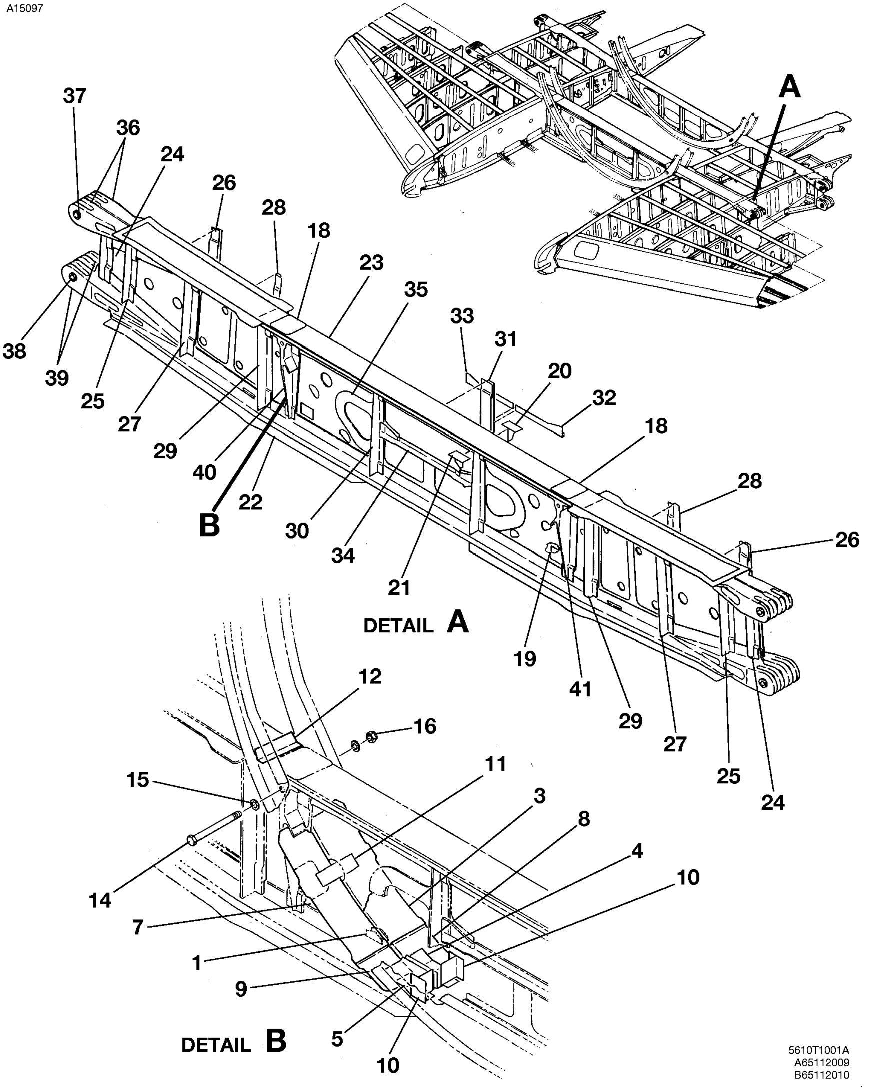

STUB WING - CENTER SECTION
FIGURE 01 (SHEET 1)

FIG ITEM	PART NUMBER	NOMENCLATURE 1 2 3 4 5 6 7			UNITS PER ASSY
01					
-		STUB WING - CENTER SECTION	0001	0538	RF
1	6511163-2	. FILLER			04
- 2	6511163-5	. ANGLE-SEAL LH AFT			01
3	6511163-6	. ANGLE-SEAL RH AFT			01
4	6511163-7	. SEAL-CORNER LH			02
5	6511163-8	. SEAL-CORNER RH			02
- 6	6511163-9	. ANGLE-SEAL LH FORWARD			01
7	6511163-10	. ANGLE-SEAL RH FORWARD			01
8	6511163-11	. ANGLE-SEAL LH			02
9	6511163-12	. ANGLE-SEAL RH			02
10	6511163-14	. TEE FSO 6511163-17	0001	0482	NP
- 10A	6511163-17	. TEE	0483	0538	04
11	6511040-15	. SPACER			02
12	6511040-13	. SEAL ANGLE			02
- 13	6511143-1	. MAIN SPAR ASSY FSO 6511143-15	0001	0264	NP
- 13A	6511143-15	. MAIN SPAR ASSY	0265	0306	01
- 13B	6511143-17	. MAIN SPAR ASSY	0307	0482	01
- 13C	6511143-22	. MAIN SPAR ASSY	0483	0538	01
		ATTACHING PARTS			
14	S3461-85	. BOLT			02
- 14A	NAS6208-77X	. BOLT FIRST OVERSIZE ALTERNATE			02
- 14B	NAS6208-77Y	. BOLT SECOND OVERSIZE ALTERNATE			02
15	NAS1149D0863J	. WASHER			04
16	MS21083N8	. NUT			02
		—*—			
- 17	6511143-7	. . SPACER FSO 6511143-16	0001	0264	NP
- 17A	6511143-16	. . SPACER	0265	0538	01
18	6511143-8	. . PLATE			02
19	MS27253-1	. . PLATE IDENTIFICATION FSO S4053-1 OR S2674-3			NP
- 19A	S4053-1	. . PLATE IDENTIFICATION-FOR SPARES ONLY REFER TO NOTE 1			01
- 19B	S2674-3	. . PLATE IDENTIFICATION-FOR SPARES ONLY			01
20	6511025-19	. . TEE CLIP AFT			02
21	6511025-20	. . TEE CLIP FORWARD			02
22	6511038-8	. . CAP STRIP ASSY-LOWER FS0 6511038-31	0001	0264	NP
- 22A	6511038-31	. . CAP STRIP ASSY-LOWER	0265	0538	01
23	6511038-27	. . CAP STRIP ASSY-UPPER 6511038-32	0001	0264	NP
- 23A	6511038-32	. . CAP STRIP ASSY-LOWER	0265	0538	01
24	6511153-1	. . TEE			04
25	6511153-2	. . TEE			04
26	6511153-3	. . STIFFENER			02
27	6511153-4	. . TEE			04
28	6511153-5	. . STIFFENER			02
29	6511153-6	. . TEE			04
30	6511153-7	. . TEE			04
31	6511153-8	. . STIFFENER FSO 6511153-17	0001	0482	NP
- 31A	6511153-17	. . STIFFENER	0483	0538	01
32	6511153-9	. . STIFFENER-LH FSO 6511153-15	0001	0264	NP
- 32A	6511153-15	. . STIFFENER-LH	0265	0538	01
33	6511153-10	. . STIFFENER-RH FSO 6511153-14	0001	0264	NP
- 33A	6511153-14	. . STIFFENER-LH	0265	0538	01
34	6511153-11	. . STIFFENER FSO 6511153-16	0001	0264	NP
- 34A	6511153-16	. . STIFFENER	0265	0538	01
35	6511153-12	. . DOUBLER FSO 6511153-13	0001	0264	NP
- 35A	6511153-13	. . DOUBLER	0265	0538	04
36	6511154-2	. . BUSHING	0001	0538	04
37	6511154-5	. . BUSHING	0001	0538	04
38	6511154-6	. . BUSHING			04
39	6511154-8	. . BUSHING			04
40	6511161-1	. . FITTING-LH FORWARD			01
41	6511161-2	. . FITTING-RH FORWARD			01
- 42	6511161-3	. . FITTING-LH AFT			01
- 43	6511161-4	. . FITTING-RH AFT			01
- 44	6511143-2	. . SPAR ASSY-BONDED FSO 6511143-10	0001	0264	NP
- 45	6511143-10	. . SPAR ASSY-BONDED FSO 6511143-18	0265	0306	NP
- 46	6511143-18	. . SPAR ASSY-BONDED	0307	0538	01

NOTE 1—PERMISSIBLE TO USE REMAINING STOCK OF MS27253-1

- ITEM NOT ILLUSTRATED

A15099

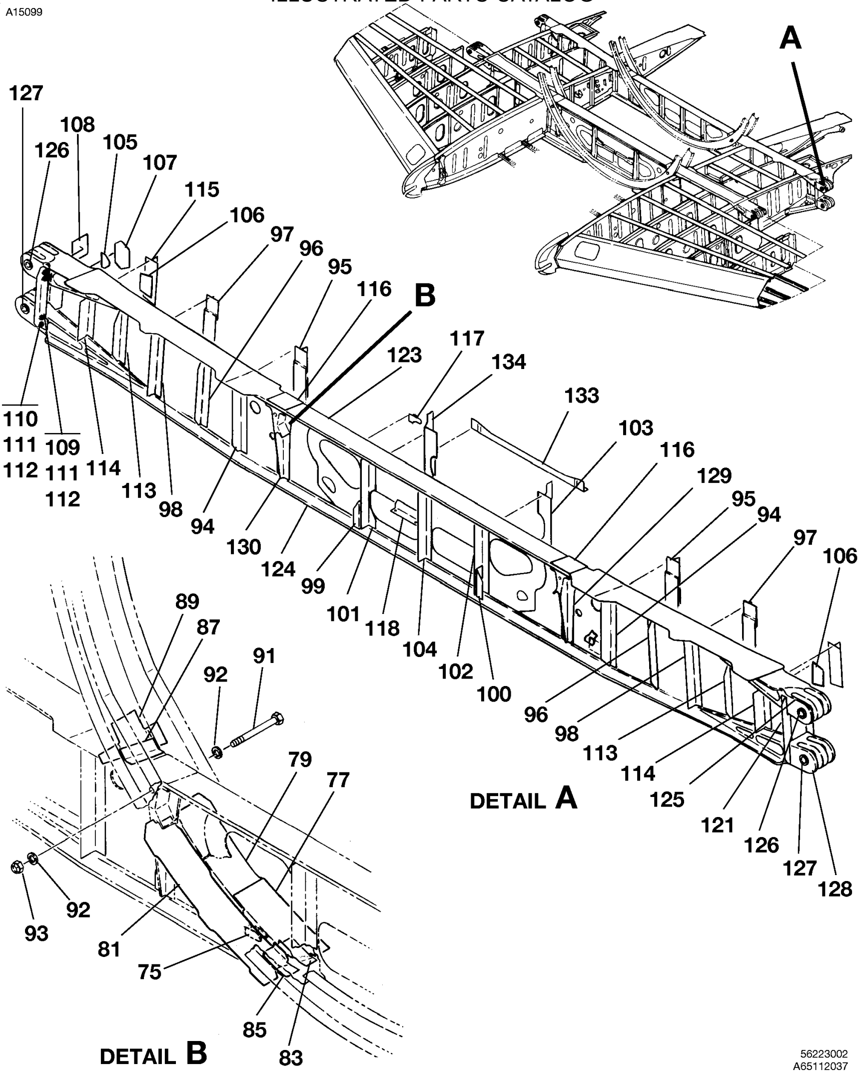

STUB WING - CENTER SECTION
FIGURE 01 (SHEET 2)

FIG ITEM	PART NUMBER	NOMENCLATURE 1 2 3 4 5 6 7			UNITS PER ASSY
01					
75	6511158-2	. FILLER			02
- 76	6511158-3	. ANGLE-SEAL LH			01
77	6511158-4	. ANGLE-SEAL RH			01
- 78	6511158-5	. ANGLE-SEAL LH			01
79	6511158-6	. ANGLE-SEAL RH			01
- 80	6511158-7	. ANGLE-SEAL LH			01
81	6511158-8	. ANGLE-SEAL RH			01
- 82	6511158-9	. SEAL-CORNER LH			01
83	6511158-10	. SEAL-CORNER RH			01
- 84	6511158-11	. SEAL-CORNER LH			01
85	6511158-12	. SEAL-CORNER RH			01
- 86	6511039-13	. ANGLE-SEAL LH			01
87	6511039-14	. ANGLE-SEAL RH			01
- 88	6511039-15	. STRAP LH			01
89	6511039-16	. STRAP-RH			01
- 90	6511159-1	. SPAR ASSY-REAR FSO 6511159-53	0001	0264	NP
- 90A	6511159-44	. SPAR ASSY-REAR FSO 6511159-53	0265	0306	NP
- 90B	6511159-53	. SPAR ASSY-REAR	0307	0538	01
		ATTACHING PARTS			
91	S3461-83	. BOLT			02
92	NAS1149D0763K	. WASHER			04
93	MS21083N7	. NUT			02
		—*—			
94	6511159-5	. . TEE			02
95	6511159-6	. . TEE FSO 6511119-48	0001	0264	NP
- 95A	6511159-48	. . TEE	0265	0538	02
96	6511159-8	. . STIFFENER			02
97	6511159-9	. . STIFFENER			02
98	6511159-10	. . TEE			02
99	6511159-11	. . ANGLE-FORWARD RH AFT LH			02
100	6511159-12	. . ANGLE-FORWARD LH AFT RH			02
101	6511159-13	. . STIFFENER-LH			01
102	6511159-14	. . STIFFENER-RH			01
103	6511159-16	. . STIFFENER			01
104	6511159-17	. . STIFFENER			01
105	6511159-19	. . FILLER			02
106	6511159-20	. . FILLER			02
107	6511159-21	. . CLIP			04
108	6511159-22	. . PLATE-SPLICE			02
		ATTACHING PARTS			
109	NAS6204-56	. . BOLT			03
110	NAS6204-58	. . BOLT			01
111	NAS1149D0463K	. . WASHER			04
112	MS21042-4	. . NUT			04
		—*—			
113	6511035-13	. . STIFFENER			02
114	6511035-14	. . TEE			02
115	6511035-16	. . TEE			02
116	6511035-26	. . PLATE			02
117	6511035-34	. . CLIP			01
118	6511035-35	. . BRACKET			01
- 119	6511035-47	. . TEE-LH AFT			01
- 120	6511035-48	. . TEE-RH AFT			01
121	6511035-49	. . TEE-LH FORWARD			01
- 122	6511035-50	. . TEE-RH FORWARD			01
123	6511036-5	. . STRAP-SPLICE UPPER			01
124	6511037-5	. . STRAP-SPLICE LOWER			01
125	6511154-1	. . BUSHING-UPPER			04
126	6511154-5	. . BUSHING-UPPER			04
127	6511154-6	. . BUSHING-LOWER			04
128	6511154-7	. . BUSHING-LOWER			04
129	6511162-1	. . FITTING-LH FWD			01
130	6511162-2	. . FITTING-RH FWD			01
- 131	6511162-3	. . FITTING-LH AFT			01
- 132	6511162-4	. . FITTING-RH AFT			01
133	6511159-26	. . STIFFENER			01
134	6511159-27	. . STIFFENER			01
- 135	6511159-2	. . SPAR ASSY-BONDED FSO 6511159-45	0002	0264	NP
- 136	6511159-45	. . SPAR ASSY-BONDED	0265	0306	01
- 137	6511159-54	. SPAR ASSY-BONDED	0307	0538	01

- ITEM NOT ILLUSTRATED

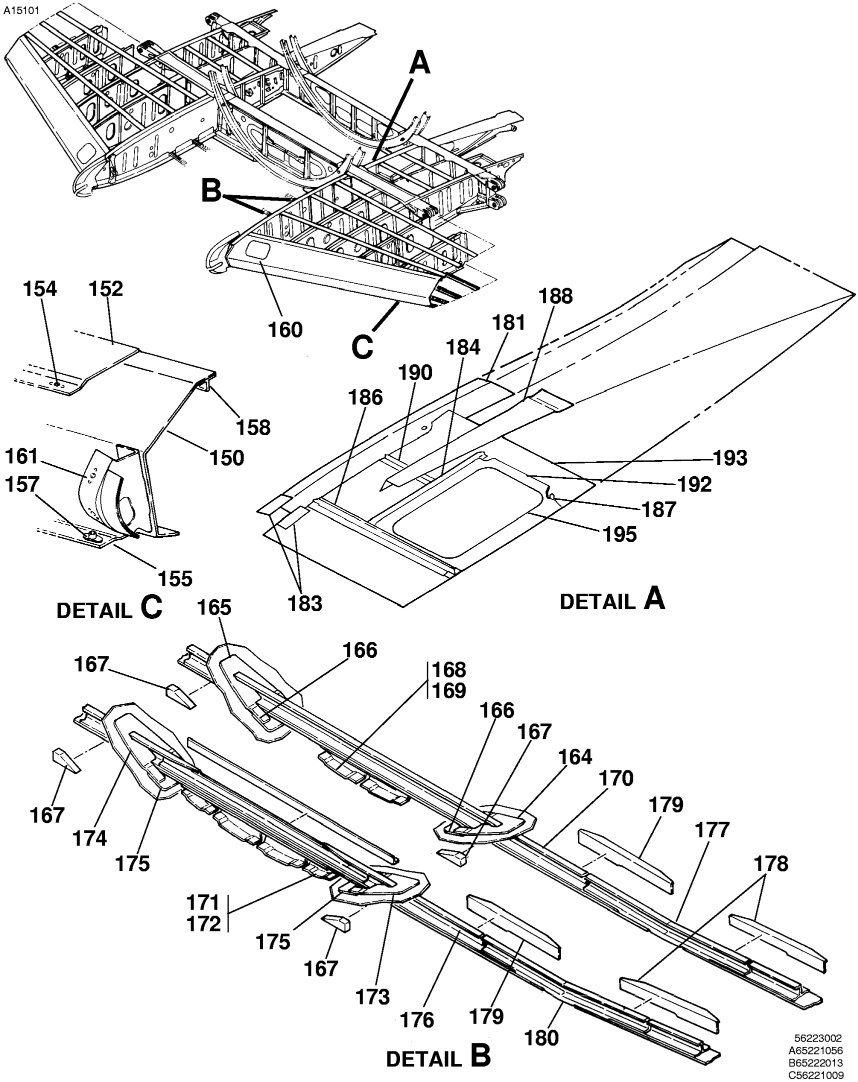

STUB WING - CENTER SECTION
FIGURE 01 (SHEET 3)

FIG ITEM	PART NUMBER	NOMENCLATURE 1 2 3 4 5 6 7			UNITS PER ASSY
01					
150	6511226-3	. CHANNEL ASSY-LEADING EDGE LH FSO 6511226-35	0001	0264	NP
- 150A	6511226-35	. CHANNEL ASSY-LEADING EDGE LH	0265	0538	01
- 150B	6591341-3	. CHANNEL ASSY-LEADING EDGE LH BRITISH CERTIFIED AIRPLANES FSO 6591341-21	0032	0264	NP
- 150C	6591341-21	. CHANNEL ASSY-LEADING EDGE LH BRITISH CERTIFIED AIRPLANES	0265	0538	01
- 151	6511226-4	. CHANNEL ASSY-LEADING EDGE RH FSO 6511126-36	0001	0264	NP
- 151A	6511226-36	. CHANNEL ASSY-LEADING EDGE LH	0265	0538	01
- 151B	6591341-4	. CHANNEL ASSY-LEADING EDGE RH BRITISH CERTIFIED AIRPLANES FSO 6591341-22	0032	0264	NP
- 151C	6591341-22	. CHANNEL ASSY-LEADING EDGE LH BRITISH CERTIFIED AIRPLANES	0265	0538	01
152	6511226-9	. STRAP ASSY-UPPER LH			01
- 153	6511226-10	. STRAP ASSY-UPPER RH			01
154	MS21059L3	. . NUTPLATE			26
155	6511226-13	. STRAP ASSY-LOWER LH FSO 6511226-37	0001	0264	NP
- 155A	6511226-37	. STRAP ASSY-LOWER LH	0265	0538	01
- 156	6511226-14	. STRAP ASSY-LOWER RH FSO 65111226-38	0001	0264	01
- 156A	6511226-38	. STRAP ASSY-LOWER RH	0265	0538	01
157	MS21059L3	. . NUTPLATE			28
158	6511226-27	. STRINGER-LH			01
- 159	6511226-28	. STRINGER-RH			01
160	6511226-29	. COVER FSO 6511226-47	0001	0264	NP
- 160A	6511226-47	. COVER	0265	0538	02
- 160B	6591341-9	. COVER BRITISH CERTIFIED AIRPLANES FSO 6591341-23	0032	0264	NP
- 160C	6591341-23	. COVER BRITISH CERTIFIED AIRPLANES	0265	0538	02
161	6511226-17	. BRACKET ASSY-LH	0001	0051	01
- 161A	6511226-31	. BRACKET ASSY-LH	0052	0104	01
- 161B	6511226-49	. BRACKET ASSY-LH	0105	0538	01
- 161C	6591341-19	. BRACKET ASSY-LH BRITISH CERTIFIED AIRPLANES	0032	0538	01
- 162	6511226-18	. BRACKET ASSY-RH	0001	0051	01
- 162A	6511226-32	. BRACKET ASSY-RH	0052	0104	01
- 162B	6511226-50	. BRACKET ASSY-RH	0105	& ON	01
- 162C	6591341-20	. BRACKET ASSY-RH BRITISH CERTIFIED AIRPLANES	0032	0264	01
- 163	MS21069L3	. . NUTPLATE			02
164	6511103-7	. DOUBLER			01
165	6511103-8	. DOUBLER			01
166	6511103-9	. DOUBLER			02
167	6511103-20	. BLOCK			08
168	6511103-21	. CHANNEL-FORWARD			01
169	6511103-22	. CHANNEL-AFT			01
170	6511103-2	. STRINGER 10-BOND ASSY FSO 6511103-23	0001	0264	NP
- 170A	6511103-23	. STRINGER 10-BOND ASSY	0265	0538	01
171	6511103-13	. CHANNEL-FORWARD			01
172	6511103-14	. CHANNEL-AFT			01
173	6511103-15	. DOUBLER			01
174	6511103-16	. DOUBLER			01
175	6511103-17	. DOUBLER			02
176	6511103-11	. STRINGER 9-BOND ASSY FSO 6511103-24	0001	0264	01
- 176A	6511103-24	. STRINGER 9-BOND ASSY	0265	0538	01
177	6511175-1	. SPLICE-STRINGER FITTING			02
178	6511175-3	. ANGLE-SPLICE LH			04
179	6511175-4	. ANGLE-SPLICE RH			04
180	6511175-2	. SPLICE-STRINGER FITTING LH			02
181	6511001-3	. ANGLE-LH LOWER AFT			01
- 182	6511001-4	. ANGLE-RH LOWER AFT			01
183	6511001-18	. STRAP-SPLICE			04
184	6511001-21	. STIFFENER-LH			01
- 185	6511001-22	. STIFFENER-RH			01
186	6511001-30	. STIFFENER			02
187	6511001-43	. FILLER			08
188	6511001-55	. ANGLE-LH UPPER AFT			01
- 189	6511001-56	. ANGLE-RH UPPER AFT			01
190	6511001-57	. STIFFENER-LH			01
- 191	6511001-58	. STIFFENER-RH			01
192	6511001-65	. DOUBLER			02
193	6511001-75	. SKIN-LH AFT FSO 6511001-83	0001	0264	NP
- 193A	6511001-83	. SKIN-LH AFT	0265	0538	01
- 194	6511001-76	. SKIN-RH AFT FSO 6511001-84	0001	0264	NP
- 194A	6511001-84	. SKIN-LH AFT	0265	0538	01
195		. DOOR ASSY REFER TO 53-30-00 FIGURE 02			RF

- ITEM NOT ILLUSTRATED

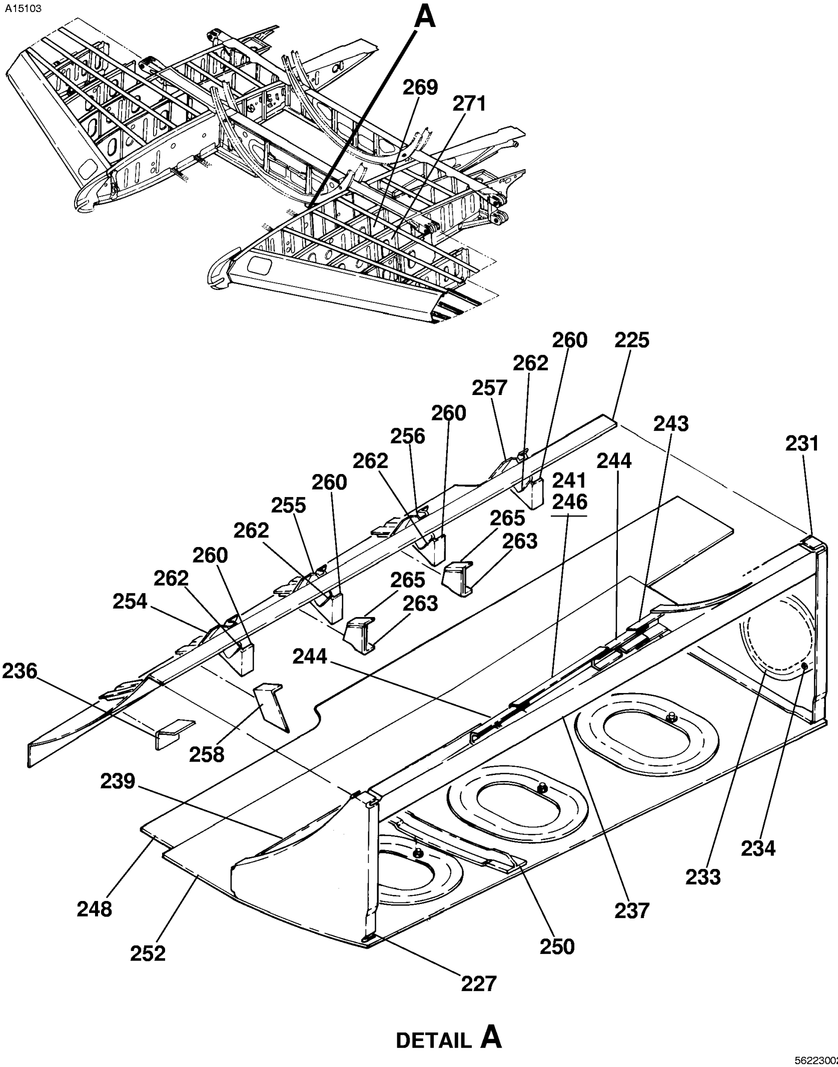

STUB WING - CENTER SECTION
FIGURE 01 (SHEET 4)

FIG ITEM	PART NUMBER	NOMENCLATURE 1 2 3 4 5 6 7			UNITS PER ASSY
01					
225	6511133-3	. TANK SKIN LH			01
- 226	6511133-4	. TANK SKIN RH			01
227	6511133-5	. RIB LH			01
- 228	6511133-6	. RIB RH			01
- 229	6511133-65	. RIB ASSY LH	0001	0306	01
- 229A	6511133-101	. RIB ASSY LH	0307	0538	01
- 230	6511133-66	. RIB ASSY RH	0001	0306	01
- 230A	6511133-102	. RIB ASSY RH	0307	0538	01
231	6511133-63	. . RIB LH			01
- 232	6511133-64	. . RIB RH			01
233	9912006-8	. . ACCESS PANEL ASSY	0001	0306	01
- 233A	9912006-14	. . ACCESS PANEL ASSY	0307	0416	01
- 233B	9912517-10	. . ACCESS PANEL ASSY	0417	0491	01
- 233C	9912517-27	. . ACCESS PANEL ASSY	0492	0538	01
234	MS27039-1-09	. . SCREW			14
- 235	NAS1473A3	. . NUTPLATE			14
236	6511133-15	. DOUBLER			02
237	6511133-19	. ANGLE UPPER LH			01
- 238	6511133-20	. ANGLE UPPER RH			01
239	6511133-21	. ANGLE LOWER LH			01
- 240	6511133-22	. ANGLE LOWER RH			01
241	6511133-23	. CHANNEL			02
- 242	6511133-24	. CHANNEL-RH LOWER AFT			01
243	6511133-25	. CHANNEL-LH LOWER AFT			01
244	6511133-26	. DOUBLER-LH			02
- 245	6511133-37	. DOUBLER-RH			02
246	6511133-27	. SHIM			06
- 247	6511133-28	. SHIM			08
248	6511133-69	. DRAG ANGLE LH			01
- 249	6511133-70	. DRAG ANGLE RH			01
250	6511133-33	. STRINGER-LH			01
- 251	6511133-34	. STRINGER-RH			01
252	6511133-39	. SKIN ASSY-BONDED LH FSO 6511133-201	0001	0264	NP
- 252A	6511133-201	. SKIN ASSY-BONDED LH	0001	0264	01
- 252B	6511133-75	. SKIN PANEL BOND ASSY LH FSO 6511133-201	0265	0306	NP
- 252C	6511133-201	. SKIN PANEL BOND ASSY LH	0265	0306	01
- 252D	6511133-89	. SKIN PANEL BOND ASSY LH FSO 6511133-203	0307	0488	NP
- 252E	6511133-203	. SKIN PANEL BOND ASSY LH	0307	0488	01 R
- 252F	6511133-105	. SKIN PANEL BOND ASSY LH FSO 6511133-205	0489	0538	NP
- 252G	6511133-205	. SKIN PANEL BOND ASSY LH	0489	0538	01
- 253	6511133-40	. SKIN ASSY-BONDED RH RH FSO 6511133-202	0001	0264	NP
- 253A	6511133-202	. SKIN ASSY-BONDED RH RH	0001	0264	01
- 253B	6511133-76	. SKIN PANEL BOND ASSY RH FSO 6511133-202	0265	0306	NP
- 253C	6511133-202	. SKIN PANEL BOND ASSY RH	0265	0306	01
- 253D	6511133-90	. SKIN PANEL BOND ASSY RH FSO 6511133-204	0307	0488	NP
- 253E	6511133-204	. SKIN PANEL BOND ASSY RH	0307	0488	01 R
- 253F	6511133-106	. SKIN PANEL BOND ASSY RH FSO 6511133-206	0489	0538	NP
- 253G	6511133-206	. SKIN PANEL BOND ASSY RH	0489	0538	01
- 253H	6511133-97	. . FILLER-LH	0307	0538	01
- 253J	6511133-98	. . FILLER-RH	0307	0538	01
254	6511133-41	. STIFFENER			02
255	6511133-42	. STIFFENER			02
256	6511133-43	. STIFFENER			02
257	6511133-44	. STIFFENER			02
258	6511133-71	. CLIP LH			01
- 259	6511133-72	. CLIP RH			01
260	6511133-47	. CLIP LH			04
- 261	6511133-48	. CLIP RH			04
262	6511133-49	. CLIP			08
263	6511133-51	. CLIP LH			02
- 264	6511133-52	. CLIP RH			02
265	6511133-53	. CLIP LH			02
- 266	6511133-54	. CLIP RH			02
- 267	NAS1473A08	. NUTPLATE			28
- 268	NAS1473A3	. NUTPLATE			84
269	6511253-3	. DOUBLER-INBOARD LH FSO 6511253-11	0001	0264	NP
- 269A	6511253-11	. DOUBLER-INBOARD LH	0265	0538	01
- 270	6511253-4	. DOUBLER-INBOARD RH FSO 6511253-12	0001	0264	NP
- 270A	6511253-12	. DOUBLER-INBOARD RH	0265	0538	01
271	6511253-5	. DOUBLER-OUTBOARD LH FSO 6511253-13	0001	0264	01
- 271A	6511253-13	. DOUBLER-OUTBOARD LH	0265	0538	01
- 272	6511253-6	. DOUBLER-OUTBOARD RH FSO 6511253-14	0001	0264	NP
- 273	6511253-14	. DOUBLER-OUTBOARD RH	0265	0538	01
- 274	26R16-1	. RECEPTACLE-FSO S3275E204	0307	0488	04
- 274A	S3275E204	. RECEPTACLE	0489	0538	04

- ITEM NOT ILLUSTRATED

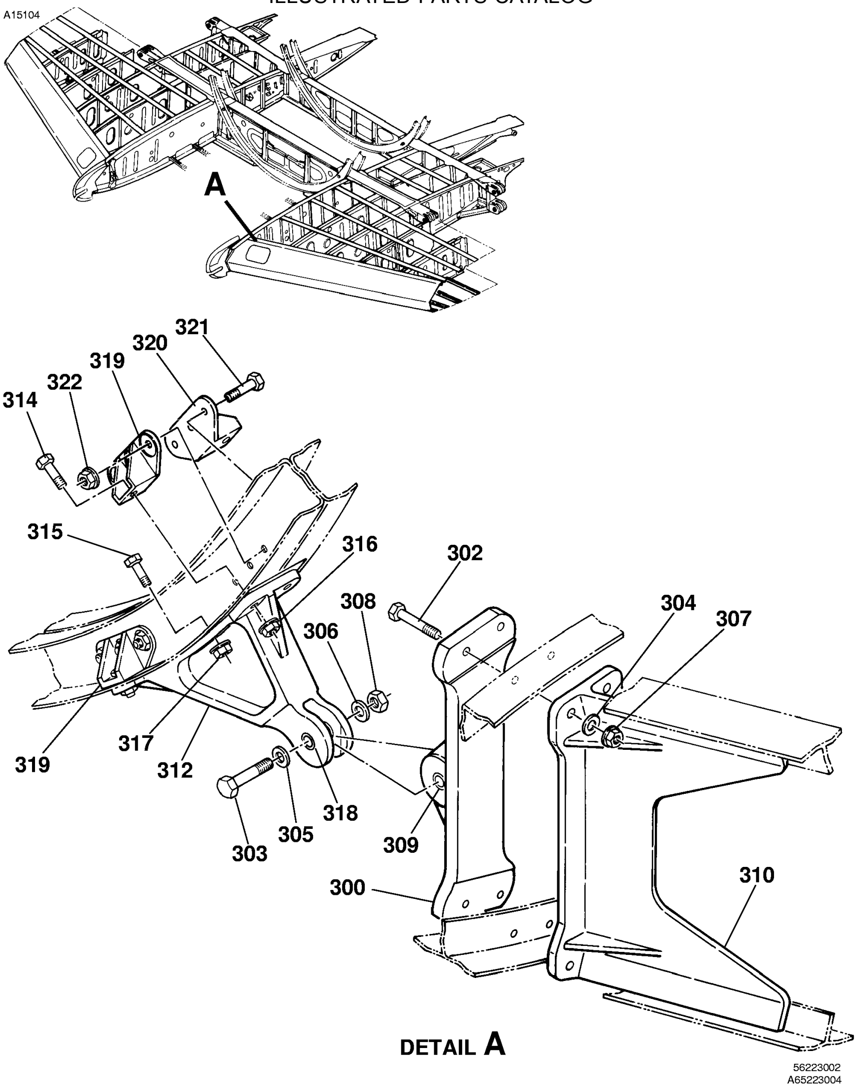

STUB WING - CENTER SECTION
FIGURE 01 (SHEET 5)

FIG ITEM	PART NUMBER	NOMENCLATURE 1 2 3 4 5 6 7			UNITS PER ASSY
01					
300	6511177-5	. FITTING-LH SHEAR ATTACH	0001	0084	01
- 300A	6511177-9	. SHEAR FTTING ASSY LH	0085	0538	01
- 301	6511177-6	. FITTING-RH SHEAR ATTACH	0001	0084	01
- 301A	6511177-10	. SHEAR FTTING ASSY RH	0085	0538	01
		ATTACHING PARTS			
302	NAS464P4A14	. BOLT			04
303	S3461-79	. BOLT MPI			01
304	NAS1149CN432R	. WASHER			04
305	NAS1149F0632P	. WASHER			01
306	NAS1149F0663P	. WASHER			01
307	MS21042L4	. NUT			04
308	MS21083N6	. NUT			01
		—*—			
309	NAS75-6-016	. . BUSHING			01
310	6511127-3	. FITTING-LH SHEAR			01
- 311	6511127-4	. FITTING-RH SHEAR			01
312	6511123-3	. FITTING ASSY-SHEAR	0002	0096	02
- 312A	6511123-9	. FITTING ASSY-SHEAR	0097	0538	02
		ATTACHING PARTS			
- 313	AN5-12A	. BOLT			02
314	AN5-10A	. BOLT			02
315	AN4-7A	. BOLT			02
316	MS21042L5	. NUT			04
317	MS21042L4	. NUT			02
		—*—			
318	NAS75-6-009	. . BUSHING			02
319	5511128-1	. LUG-FORWARD FSO 5511128-3	0001	0255	NP
- 319A	5511128-3	. LUG-FORWARD	0256	0538	02
320	5511128-2	. LUG-AFT FSO 5511128-4	0001	0255	NP
- 320A	5511128-4	. LUG-AFT	0256	0538	02
		ATTACHING PARTS			
321	AN4-7A	. BOLT			03
322	MS21042L4	. NUT			03
		—*—			

- ITEM NOT ILLUSTRATED

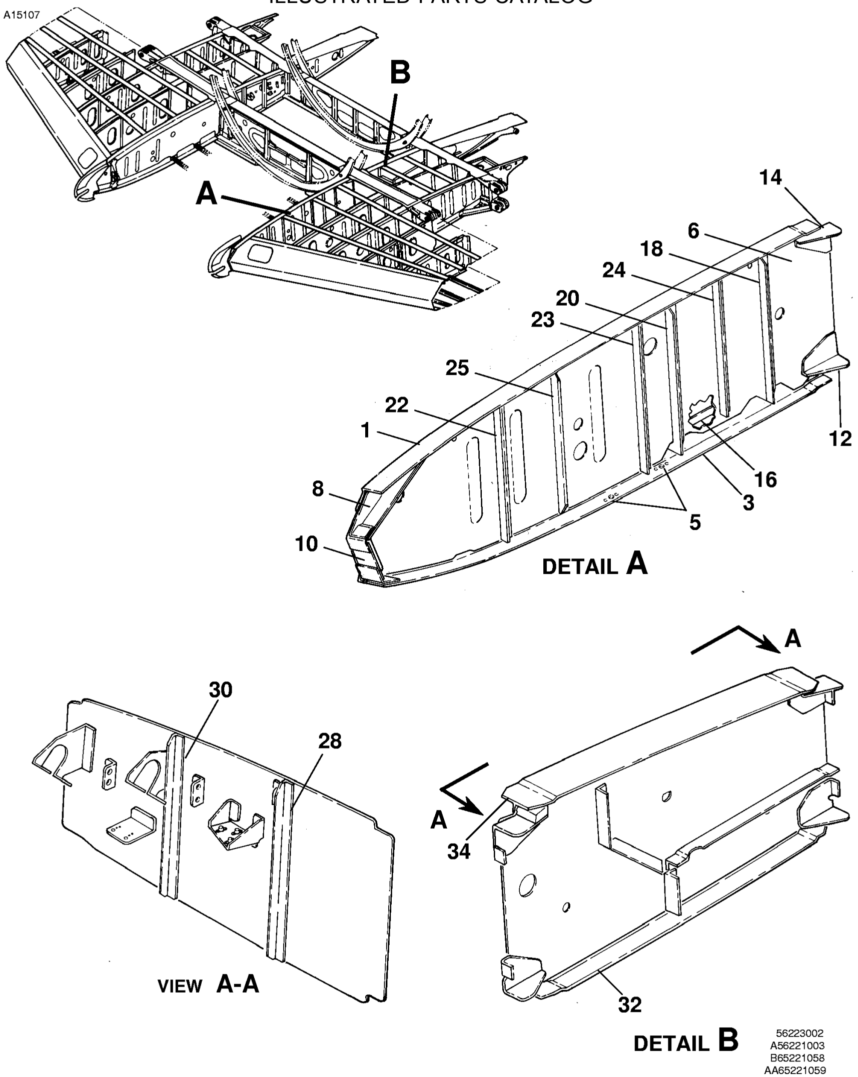

STUB WING - RIBS
FIGURE 02 (SHEET 1)

FIG ITEM	PART NUMBER	NOMENCLATURE 1 2 3 4 5 6 7			UNITS PER ASSY
02					
-		STUB WING - RIBS	0001	0538	RF
1	6511248-5	. CAP-RIB UPPER LH			01
- 2	6511248-6	. CAP-RIB UPPER RH			01
3	6511248-7	. CAP-RIB LOWER LH			01
- 4	6511248-8	. CAP-RIB LOWER RH			01
5	NAS1473A08	. NUTPLATE			04 R
6	6511248-3	. WEB-LH AND RH			02
- 7		. DELETED NOT USED			RF
8	6511248-9	. ANGLE-LH			01
- 9	6511248-10	. ANGLE-RH			01
10	6511248-11	. CLOSURE-LH			01
- 11	6511248-12	. CLOSURE-RH			01
12	6511107-7	. CLIP-TIE LOWER LH			01
- 13	6511107-8	. CLIP-TIE LOWER RH			01
14	6511107-9	. CLIP-TIE UPPER LH			01
- 15	6511107-10	. CLIP-TIE UPPER RH			01
16	6511107-13	. STIFFENER-LH			01
- 17	6511107-14	. STIFFENER-RH			01
18	6511107-15	. STIFFENER-LH			01
- 19	6511107-16	. STIFFENER-RH			01
20	6511107-17	. STIFFENER-LH			01
- 21	6511107-18	. STIFFENER-RH			01
22	6511107-27	. STIFFENER			02
23	6511107-28	. STIFFENER			02
24	6511107-29	. STIFFENER			02
25	6511107-37	. STIFFENER			02
- 26	6511101-3	. RIB ASSY-LH	0001	0264	01
- 26A	6511101-29	. RIB ASSY-LH	0265	0538	01
- 27	6511101-4	. RIB ASSY-RH	0001	0264	01
- 27A	6511101-30	. RIB ASSY-RH	0265	0538	01
28	6511034-47	. . STIFFENER-LH CENTER			01
- 29	6511034-48	. . STIFFENER-RH CENTER			01
30	6511034-49	. . STIFFENER-LH CENTER			01
- 31	6511034-50	. . STIFFENER-RH CENTER			01
32	6511134-1	. . CAP-LOWER LH			01
- 33	6511134-2	. . CAP-LOWER RH			01
34	6511134-3	. . CAP-UPPER LH	0001	0183	01
- 34A	6511101-27	. . CAP-UPPER LH	0184	0538	01
- 35	6511134-4	. . CAP-UPPER RH	0001	0183	01
- 35A	6511101-28	. . CAP-UPPER RH	0184	0538	01

- ITEM NOT ILLUSTRATED

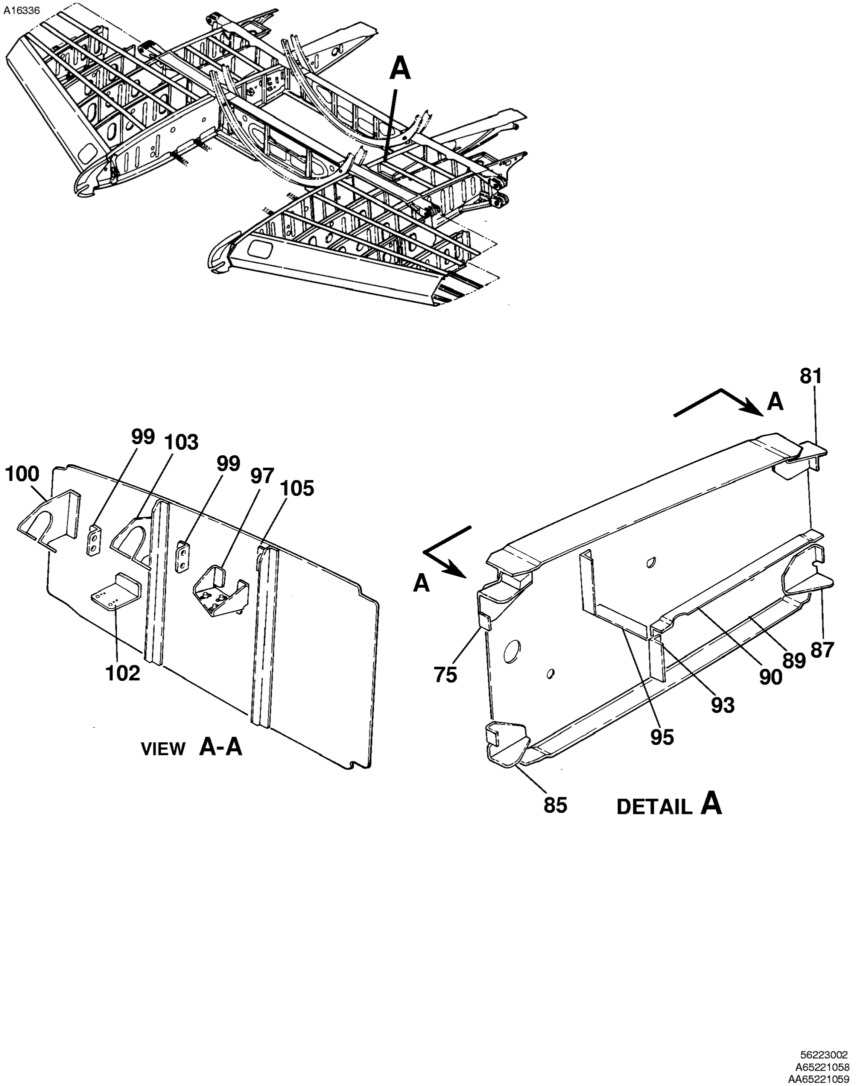

STUB WING - RIBS
FIGURE 02 (SHEET 2)

FIG ITEM	PART NUMBER	NOMENCLATURE 1 2 3 4 5 6 7			UNITS PER ASSY
02					
75	6511134-5	. . BRACKET ASSY-UPPER LH FSO 6511101-31	0001	0183	NP
- 76	6511101-35	. . BRACKET ASSY-UPPER LH	0184	0264	01
- 77	6511101-31	. . BRACKET ASSY-UPPER LH	0265	0538	01
- 78	6511134-6	. . BRACKET ASSY-UPPER RH FSO 6511101-32	0001	0183	NP
- 79	6511134-36	. . BRACKET ASSY-UPPER RH	0184	0264	01
- 80	6511101-32	. . BRACKET ASSY-UPPER RH	0265	0538	01
81	6511134-7	. . BRACKET ASSY-UPPER LH FSO 6511134-23	0001	0264	01
- 82	6511134-23	. . BRACKET ASSY-UPPER LH	0265	0538	01
- 83	6511134-8	. . BRACKET ASSY-UPPER RH FSO 6511134-24	0001	0264	NP
- 84	6511134-24	. . BRACKET ASSY-UPPER RH	0265	0538	01
85	6511134-11	. . BRACKET-LOWER LH			01
- 86	6511134-12	. . BRACKET-LOWER RH			01
87	6511134-15	. . BRACKET-LOWER LH			01
- 88	6511134-16	. . BRACKET-LOWER RH			01
89	6511134-17	. . WEB			02
90	6526303-63	. . ANGLE ASSY-LH INBOARD			01
- 91	6526303-64	. . ANGLE ASSY-RH INBOARD			01
- 92	MS21076-3	. . . NUTPLATE			07
93	6526303-19	. . ANGLE-LH			01
- 94	6526303-20	. . ANGLE-RH			01
95	6526303-41	. . ANGLE-LH INBOARD			01
- 96	6526303-42	. . ANGLE-RH INBOARD			01
97	6526351-13	. . BRACKET ASSY-LH			01
- 98	6526351-14	. . BRACKET ASSY-RH			01
99	6526351-29	. . BRACKET			04
100	6526351-43	. . BRACKET ASSY-LH			01
- 101	6526351-44	. . BRACKET ASSY-RH			01
102	6526351-53	. . BRACKET ASSY			02
103	6526351-1	. BRACKET ASSY-LH			01
- 104	6526351-2	. BRACKET ASSY-RH			01
105	6526351-19	. BRACKET-LH	0001	0254	01
- 106	6526351-20	. BRACKET-RH	0001	0254	01

- ITEM NOT ILLUSTRATED

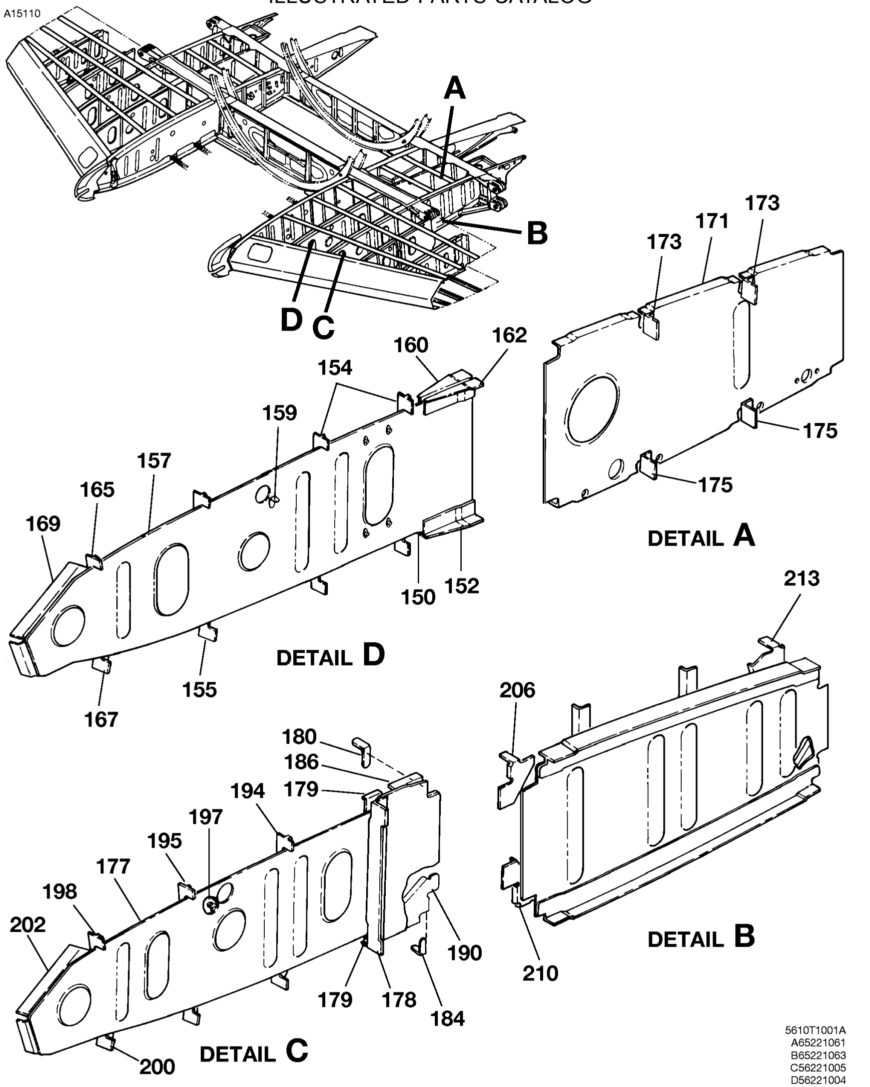

STUB WING - RIBS
FIGURE 02 (SHEET 3)

FIG ITEM	PART NUMBER	NOMENCLATURE 1 2 3 4 5 6 7			UNITS PER ASSY
02					
150	6511108-3	. CLIP-LH			01
- 151	6511108-4	. CLIP-RH			01
152	6511108-5	. CLIP-LH			01
- 153	6511108-6	. CLIP-RH			01
154	6511108-11	. STIFFENER			02
155	6511108-19	. STIFFENER-LH			01
- 156	6511108-20	. STIFFENER-RH			01
157	6511237-3	. WEB	0001	0039	02
- 158	6511237-4	. WEB	0040	0538	02
- 158A	6521231-5	. WEB	0539	0638	02
- 158B	6521231-6	. WEB	0639	& ON	02
159	AN743-13	. BRACKET			02
160	6511108-13	. CLIP-LH			01
- 161	6511108-14	. CLIP-RH			01
162	6511108-15	. CLIP-LH			01
- 163	6511108-16	. CLIP-RH			01
- 164	S1741-1	. ANCHOR			02
165	6222156-55	. CLIP-UPPER LH			02
- 166	6222156-56	. CLIP-UPPER RH			02
167	6222156-56	. CLIP-LOWER LH			02
- 168	6222156-55	. CLIP-LOWER RH			02
169	6511227-1	. CLOSURE-LH			01
- 170	6511227-2	. CLOSURE-RH			01
171	6511124-3	. WEB-LH			01
- 172	6511124-4	. WEB-RH			01
173	6511028-18	. CLIP-UPPER LH			02
- 174	6511028-17	. CLIP-UPPER RH			02
175	6511028-17	. CLIP-LOWER LH			02
- 176	6511028-18	. CLIP-LOWER RH			02
177	6511238-3	. WEB	0001	0538	02
- 177A	6521241-5	. WEB	0539	0638	02
- 177B	6521241-6	. WEB	0639	& ON	02
178	6511119-4	. STIFFENER			02
179	6511119-17	. FILLER			04
180	6511119-21	. CLIP-UPPER LH FSO 6511119-37	0001	0264	NP
- 181	6511119-37	. CLIP-UPPER LH	0265	0538	01
- 182	6511119-20	. CLIP-UPPER RH FSO 651119-38	0001	0264	NP
- 183	6511119-38	. CLIP-UPPER RH	0265	0538	01
184	6511119-25	. CLIP-LOWER LH			01
- 185	6511119-24	. CLIP-LOWER RH			01
186	6511119-29	. GUSSET-UPPER LH FSO 611119-39	0001	0264	NP
- 187	6511119-39	. GUSSET-UPPER LH	0265	0538	01
- 188	6511119-28	. GUSSET-UPPER RH FSO 6511119-40	0001	0264	NP
- 189	6511119-40	. GUSSET-UPPER RH	0265	0538	01
190	6511119-31	. GUSSET-LOWER LH FSO 6511119-41	0001	0264	NP
- 191	6511119-41	. GUSSET-LOWER LH	0265	0538	01
- 192	6511119-30	. GUSSET-LOWER RH FSO 6511119-42	0001	0264	NP
- 193	6511119-42	. GUSSET-LOWER RH	0265	0538	01
194	6511238-4	. STIFFENER			02
195	6511119-33	. STIFFENER-LH			01
- 196	6511119-34	. STIFFENER-RH			01
197	AN743-13	. BRACKET			02
198	6222156-55	. CLIP-UPPER LH			02
- 199	6222156-56	. CLIP-UPPER RH			02
200	6222156-56	. CLIP-LOWER LH			02
- 201	6222156-55	. CLIP-LOWER RH			02
202	6511227-3	. CLOSURE-LH			01
- 203	6511227-4	. CLOSURE-RH			01
- 204	MS21047L3	. NUTPLATE			04
- 205	MS21051L3	. NUTPLATE			02
206	6511144-23	. GUSSET-UPPER LH FSO 6511144-33	0001	0415	NP
- 207	6511144-33	. GUSSET-UPPER LH	0416	0538	01
- 208	6511144-24	. GUSSET-UPPER RH FSO 6511144-34	0001	0415	NP
- 209	6511144-34	. GUSSET-UPPER RH	0416	0538	01
210	6511144-25	. GUSSET-LOWER LH FSO 6511144-35	0001	0415	NP
- 211	6511144-35	. GUSSET-LOWER LH	0416	0538	01
- 212	6511144-36	. GUSSET-LOWER RH	0001	0538	01
213	6511144-37	. GUSSET-UPPER LH	0001	0538	01
- 214	6511144-38	. GUSSET-UPPER RH	0001	0538	01

- ITEM NOT ILLUSTRATED

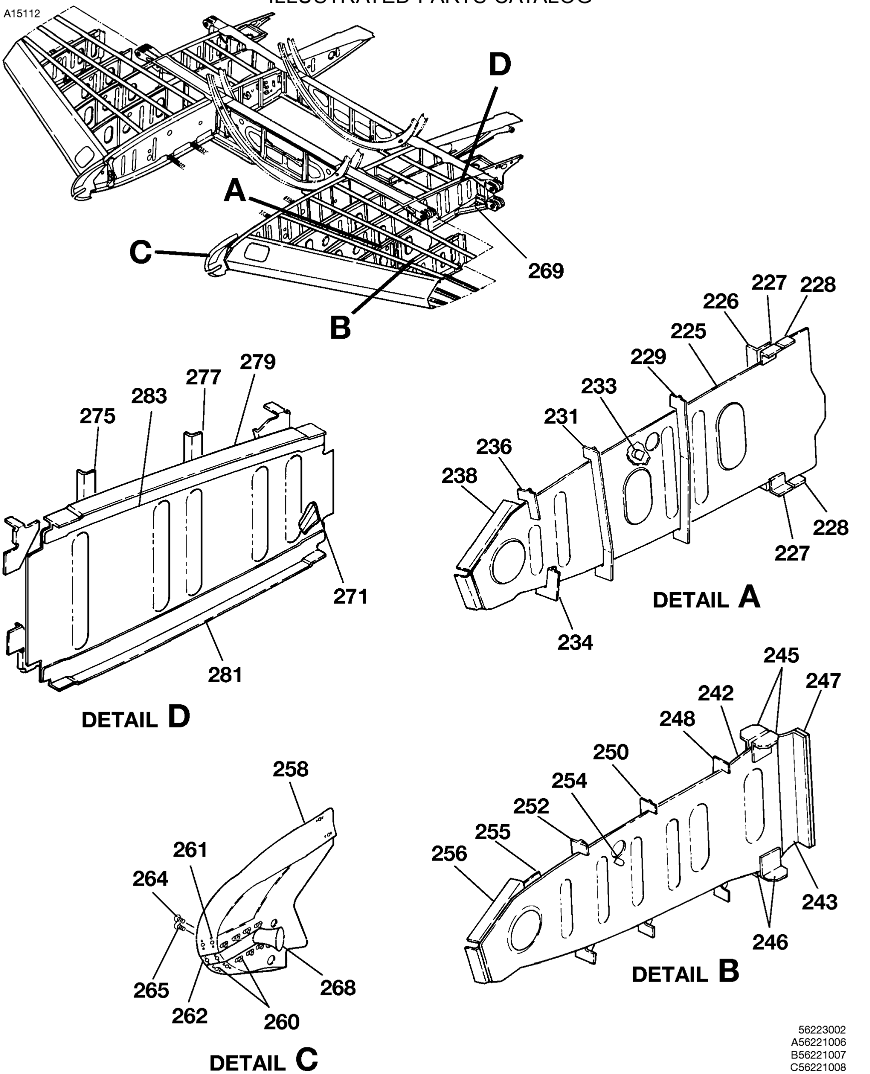

STUB WING - RIBS
FIGURE 02 (SHEET 4)

FIG ITEM	PART NUMBER	NOMENCLATURE 1 2 3 4 5 6 7			UNITS PER ASSY
02					
225	6511239-3	. WEB			02
226	6511121-10	. STIFFENER			02
227	6511121-9	. ANGLE			04
228	6511121-12	. SHIM			04
229	6511121-7	. STIFFENER-LH			01
- 230	6511121-8	. STIFFENER-RH			01
231	6511121-18	. STIFFENER-LH			01
- 232	6511121-17	. STIFFENER-RH			01
233	AN743-13	. BRACKET			02
234	6222156-17	. CLIP-LH			01
- 235	6222156-18	. CLIP-RH			01
236	6222156-17	. CLIP-LH			01
- 237	6222156-18	. CLIP-RH			01
238	6511227-5	. CLOSURE-LH			01
- 239	6511227-6	. CLOSURE-RH			01
- 240	MS21047L3	. NUTPLATE			04
- 241	MS21051L3	. NUTPLATE			02
242	6511240-3	. WEB			02
243	6511167-13	. ANGLE-LH			01
- 244	6511167-14	. ANGLE-RH			01
245	6511167-6	. ANGLE-LH AND RH			04
246	6511167-15	. ANGLE-LH AND RH			04
247	6511167-16	. FILLER-LH AND RH			02
248	6511240-7	. STIFFENER-LH			01
- 249	6511240-6	. STIFFENER-RH			01
250	6511240-9	. STIFFENER-LH			01
- 251	6511240-10	. STIFFENER-RH			01
252	6511167-23	. CLIP-LH			01
- 253	6511167-24	. CLIP-RH			01
254	AN743-13	. BRACKET			02
255	6511240-8	. SPACER			02
256	6511227-7	. CLOSURE-LH			01
- 257	6511227-8	. CLOSURE-RH			01
258	6511260-19	. RIB EXTENSION ASSY-LH			01
- 259	6511260-20	. RIB EXTENSION ASSY-RH			01
260	MS21075L08N	. . NUTPLATE			19
261	MS21075L3N	. . NUTPLATE			13
262	6511260-23	. RIB SPLICE ASSY-LH			01
- 263	6511260-24	. RIB SPLICE ASSY-RH			01
		ATTACHING PARTS			
264	MS27039-0805	. SCREW			03
265	MS27039-0806	. SCREW			04
		—*—			
- 266	MS21075-08N	. . NUTPLATE			01
- 267	MS21075-3N	. . NUTPLATE			01
268		. TUBE ASSY-REFER TO 30-10-01 FIGURE 01			RF
269	6511044-5	. FITTING-LH			01
- 270	6511044-6	. FITTING-RH			01
271	6511144-29	. GUSSET-LOWER LH FSO 6511144-39	0001	0415	NP
- 272	6511144-39	. GUSSET-LOWER LH	0416	0538	01
- 273	6511144-30	. GUSSET-LOWER RH FSO 6511144-40	0001	0415	NP
- 274	6511144-40	. GUSSET-LOWER RH	0416	0538	01
275	6511144-11	. STIFFENER-LH			01
- 276	6511144-12	. STIFFENER			01
277	6511144-13	. STIFFENER-LH			01
- 278	6511144-14	. STIFFENER-RH			01
279	6511144-15	. CAP-UPPER LH			01
- 280	6511144-16	. CAP-UPPER RH			01
281	6511144-17	. CAP-LOWER LH			01
- 282	6511144-18	. CAP-LOWER RH			01
283	6511144-19	. WEB			02
- 284	MS21047L3	. NUTPLATE			14
- 285	MS21051L3	. NUTPLATE			04

- ITEM NOT ILLUSTRATED

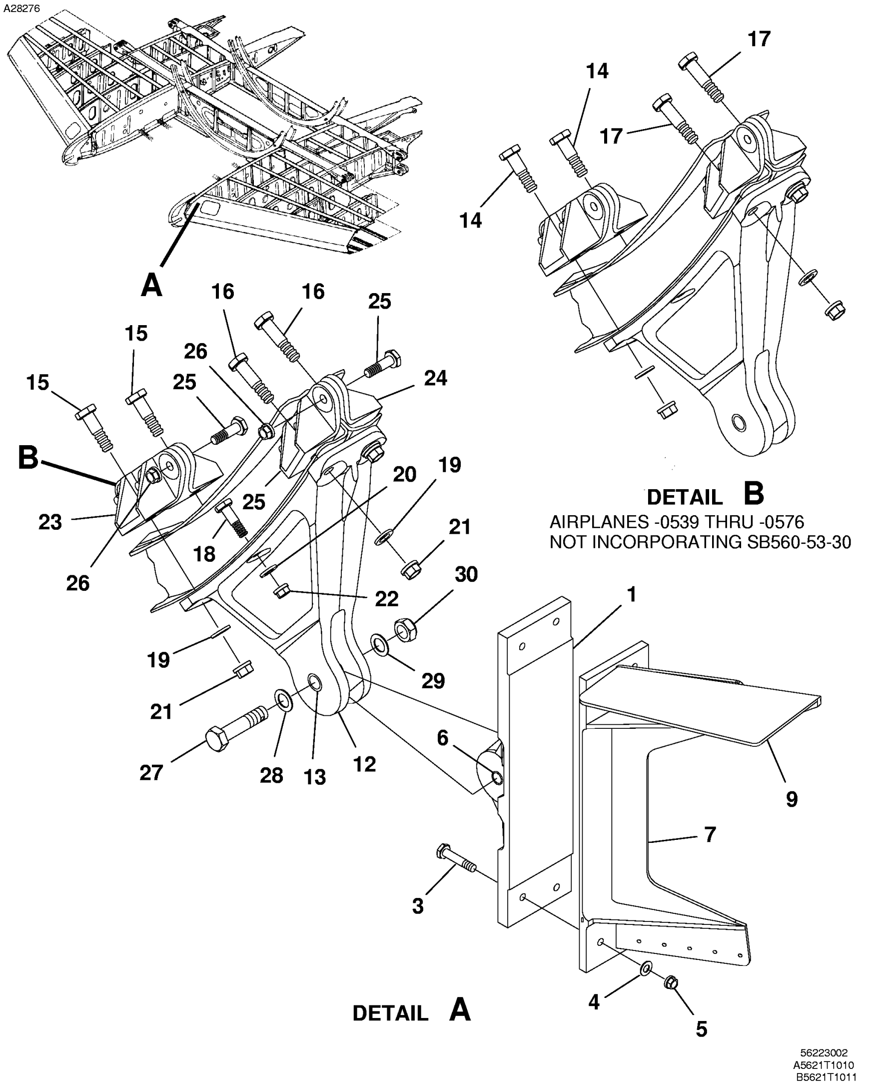

STUB WING - FORWARD SHEAR
FIGURE 03 (SHEET 1)

FIG ITEM	PART NUMBER	NOMENCLATURE 1 2 3 4 5 6 7			UNITS PER ASSY
03					
-		STUB WING - FORWARD SHEAR	0539	& ON	RF
1	6511177-9	. SHEAR FTG ASSY LH SHEAR FITTING ASSY LH			01
- 2	6511177-10	. SHEAR FTG ASSY RH SHEAR FITTING ASSY RH			01
		ATTACHING PARTS			
3	NAS464P4A14	. BOLT			04
4	NAS1149C0432R	. WASHER			04
5	MS21042L4	. NUT			04
		—*—			
6	NAS75-6-016	. . BUSHING			01
7	6521216-1	. SHEAR FITTING,BACKUP,LH			01
- 8	6521216-2	. SHEAR FITTING,BACKUP,RH			01
9	6521216-3	. ATTACH BRACKET,UPR,LH ATTACH BRACKET,UPPER,LH			02
- 10	6521216-4	. ATTACH BRACKET,UPR,RH ATTACH BRACKET,UPPER,RH			02
- 11	6511624-1	. SHEAR TIE ASSY			01
12	6511624-2	. . SHEAR TIE FITTING			01
13	NAS75-6-009	. . BUSHING			02
		ATTACHING PARTS			
14	NAS6205-13D	. BOLT REFER TO NOTE 1	0539	0576	04
15	NAS6205-10	. BOLT REFER TO NOTE 2	0577	& ON	01
16	NAS6205-12	. BOLT REFER TO NOTE 2	0577	& ON	02
17	NAS6204-7D	. BOLT REFER TO NOTE 1	0539	0576	02
18	NAS6204-8	. BOLT REFER TO NOTE 2	0577	& ON	02
19	NAS1149E0532P	. WASHER REFER TO NOTE 2	0577	& ON	01
20	NAS1149E0432P	. WASHER REFER TO NOTE 2	0577	& ON	04
21	MS21042L5	. NUT			04
22	MS21042L4	. NUT			02
		—*—			
23	5511128-3	. FITTING-MACHINED-FORWARD			02
24	5511128-4	. FITTING-MACHINED-AFT			02
		ATTACHING PARTS			
25	AN4-7A	. BOLT			03
26	MS21042L4	. NUT			03
		—*—			
27	S3461-118	. BOLT MPI			01
28	NAS1149F0632P	. WASHER			01
29	NAS1149F0663P	. WASHER			01
30	MS21083N6	. NUT			01
		—*—			

NOTE 1—AIRPLANES-0539 THRU -0576 NOT INCORPORATING SB560-53-30.

NOTE 2—AIRPLANES -0577 AND ON AND AIRPLANES -0539 THRU -0707 AND AIRPLANES -0751 & ON INCORPORATING SB560-53-30. R

- ITEM NOT ILLUSTRATED

A60963

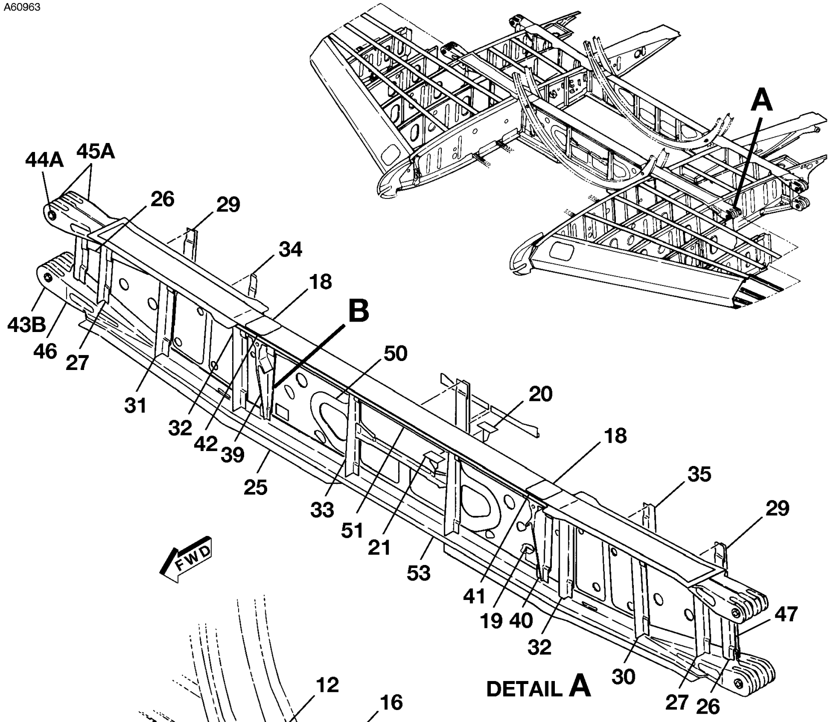

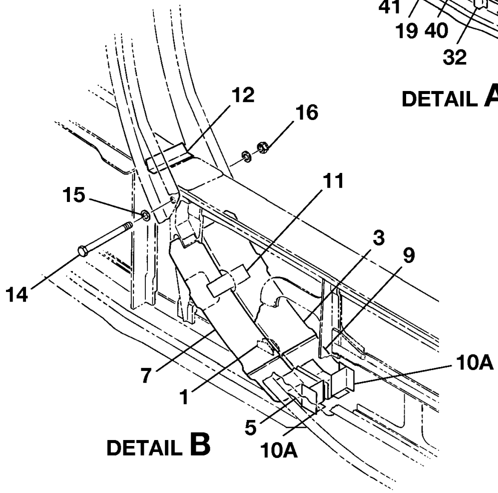

5622R3002
A6511R2009
B6511R2010

MAIN SPAR ASSY
FIGURE 04 (SHEET 1)

FIG ITEM	PART NUMBER	NOMENCLATURE 1 2 3 4 5 6 7			UNITS PER ASSY
04					
-		MAIN SPAR ASSY	0539	& ON	RF
1	6511163-2	. FILLER			04
- 2	6511163-5	. SEAL ANGLE AFT LH			01
3	6511163-6	. SEAL ANGLE AFT RH			01
- 4	6511163-7	. CORNER SEAL LH			02
5	6511163-8	. CORNER SEAL RH			02
- 6	6511163-9	. SEAL ANGLE FWD LH			01
7	6511163-10	. SEAL ANGLE FWD RH			01
- 8	6511163-11	. SEAL ANGLE LH			02
9	6511163-12	. SEAL ANGLE RH			02
- 10	6511163-17	. TEE	0539	0595	04
10A	6521523-4	. TEE	0596	& ON	04
11	6511040-15	. SPACER			02
12	6511040-13	. SEAL ANGLE			02
- 13	6521521-1	. MAIN SPAR CARRY THRU ASSY FSO 6521521-3	0539	0553	NP
- 13A	6521521-2	. MAIN SPAR CARRY THRU ASSY FSO 6521521-3	0554	0751	NP
- 13B	6521521-3	. MAIN SPAR CARRY THRU ASSY	0752	& ON	01
- 13C	DDA5032-1	. MAIN SPAR CARRY THRU ASSY REF 6521520	0752	0752	01
			0757	0757	
14	S3461-85	. BOLT MPI-MAIN SPAR CARRY THRU ASSY ATTACH	0559	0753	02
			0755	& ON	
- 14A	NAS6208-77X	. BOLT-MAIN SPAR CARRY THRU ASSY ATTACH	0754	0754	02
15	NAS1149D0863J	. WASHER-MAIN SPAR CARRY THRU ASSY ATTACH			04
16	MS21083N8	. NUT-MAIN SPAR CARRY THRU ASSY ATTACH			02
- 17	6511143-16	. . SPACER			01
18	6511143-8	. . PLATE			02
19	MS27253-1	. . PLATE IDENTIFICATION-FSO S4053-1 OR S2674-3			NP
- 19A	S4053-1	. . PLATE IDENTIFICATION-FOR SPARES ONLY			01
- 19B	S2674-3	. . PLATE IDENTIFICATION-FOR SPARES ONLY			01
20	6511025-19	. . TEE CLIP AFT			02
21	6511025-20	. . TEE CLIP FORWARD			02
- 22	6521526-1	. . ANGLE - LH	0539	0553	01
- 23	6521526-2	. . ANGLE - RH	0539	0553	01
- 24	6521526-3	. . PLUG	0539	0553	04
25	6511038-40	. . LWR CAP STRIP BOND A			01
26	6511153-1	. . TEE			04
27	6511153-2	. . TEE-RIB ATTACH			02
- 28	6511153-18	. . TEE-RIB ATTACH			02
29	6511153-3	. . STIFFENER			02
30	6521525-1	. . FITTING ASSY-LH FSO 6521525-201			NP
- 30A	6521525-201	. . FITTING ASSY-LH-FOR SPARES ONLY	0805	& ON	01 R
31	6521525-2	. . FIITING ASSY-RH FSO 6521525-202			NP
- 31A	6521525-202	. . FIITING ASSY-RH-FOR SPARES ONLY	0805	& ON	01 R
32	6511153-6	. . TEE-RIB ATTACH			04
33	6511153-7	. . TEE-FLOORBOARD SUPT			04
34	6521523-1	. . STIFFENER			01
35	6521523-2	. . STIFFENER			01
- 36	6521523-3	. . STIFFENER			01
- 37	6511154-2	. . BUSHING	0539	0553	08
- 38	6511154-5	. . BUSHING	0539	0553	08
39	6511161-1	. . FITTING-LH FORWARD			01
40	6511161-2	. . FITTING-RH FORWARD			01
41	6511161-3	. . FITTING-LH AFT			01
42	6511161-4	. . FITTING-RH AFT			01
- 43	6511143-23	. . BONDED SPAR ASSY	0539	0553	01
- 43A	6521524-1	. . MAIN SPAR SUB-ASSY FSO 6521524-3	0554	0752	NP
			0757	0757	
43B	6521524-3	. . MAIN SPAR SUB-ASSY	0753	0756	01
			0758	& ON	
- 44	6511154-2	. . . BUSHING	0554	0752	08
			0757	0757	
44A	6511154-6	. . . BUSHING	0753	0756	08
			0758	& ON	
- 45	6511154-5	. . . BUSHING	0554	0752	08
			0757	0757	
45A	6511154-8	. . . BUSHING	0753	0756	08
			0758	& ON	
46	6521524-2	. . . MAIN SPAR BOND ASSY	0554	& ON	01
47	6511143-19	. . . . BONDED WEB ASSY			01
- 48	6511143-20	. . . . . WEB FORWARD			01
- 49	6511143-21	. . . . . WEB AFT			01
50	6511153-13	. . . . . DOUBLER			04
51	6611026-1	. . . . UPPER CAP-FORWARD			01
- 52	6611026-2	. . . . UPPER CAP-AFT			01
53	6611027-1	. . . . LOWER CAP FWD			01
- 54	6611027-3	. . . . LOWER CAP AFT			01

- ITEM NOT ILLUSTRATED

A60964

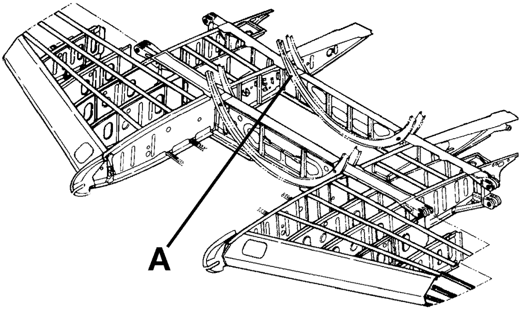

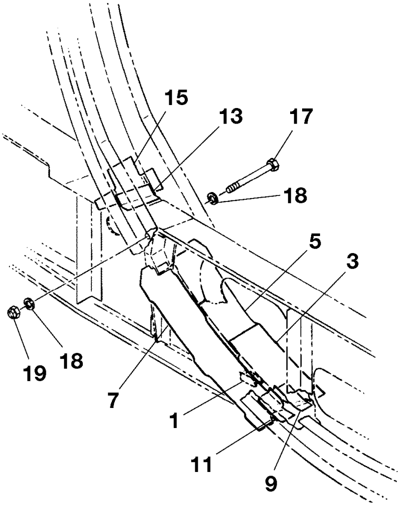

DETAIL A

5610T1049

REAR SPAR ASSY
FIGURE 05 (SHEET 1)

FIG ITEM	PART NUMBER	NOMENCLATURE 1 2 3 4 5 6 7			UNITS PER ASSY
05					
-		REAR SPAR ASSY	0539	& ON	RF
1	6511158-2	. FILLER			02
- 2	6511158-3	. ANGLE-SEAL LH			01
3	6511158-4	. ANGLE-SEAL RH			01
- 4	6511158-5	. ANGLE-SEAL LH			01
5	6511158-6	. ANGLE-SEAL RH			01
- 6	6511158-7	. ANGLE-SEAL LH			01
7	6511158-8	. ANGLE-SEAL RH			01
- 8	6511158-9	. SEAL-CORNER LH			01
9	6511158-10	. SEAL-CORNER RH			01
- 10	6511158-11	. SEAL-CORNER LH			01
11	6511158-12	. SEAL-CORNER RH			01
- 12	6511039-13	. ANGLE-SEAL LH			01
13	6511039-14	. ANGLE-SEAL RH			01
- 14	6511039-15	. STRAP-LH			01
15	6511039-16	. STRAP-RH			01
- 16	6521531-2	. REAR SPAR CARRY THRU ASSY FSO 6521531-3	0539	0647	NP
- 16A	6521531-3	. REAR SPAR CARRY THRU ASSY	0648	0651	01
- 16B	6521531-4	. REAR SPAR CARRY THRU ASSY	0652	0782	01
			0784	0785	
			0788	0793	
			0794	& ON	
- 16C	DDA05533-1	. REAR SPAR CARRY THRU ASSY REF 6521531	0783	0783	01
- 16D	DDA05532-1	. REAR SPAR CARRY THRU ASSY REF 6521531	0786	0786	01
- 16E	DDA05594-1	. REAR SPAR CARRY THRU ASSY REF 6521531	0787	0787	01
- 16F	DDA05595-1	. REAR SPAR CARRY THRU ASSY REF 6521531	0793	0793	01
		ATTACHING PARTS			
17	NAS6207-58	. BOLT	0652	0782	02
			0784	0785	
			0788	0793	
			0794	& ON	
- 17A	NAS6207-58X	. BOLT	0783	0783	02
			0793	0793	
- 17B	NAS6207-58	. BOLT-RH	0786	0786	01
- 17C	NAS6207-58X	. BOLT-LH	0786	0786	01
- 17D	NAS6207-58Y	. BOLT	0787	0787	02
18	NAS1149D0763K	. WASHER			04
19	MS21083N7	. NUT			02
		—*—			

- ITEM NOT ILLUSTRATED

A69512

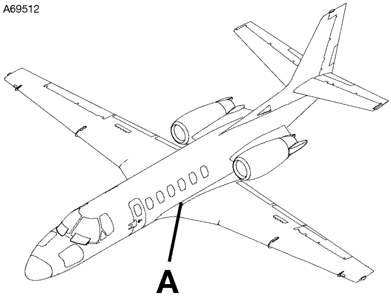

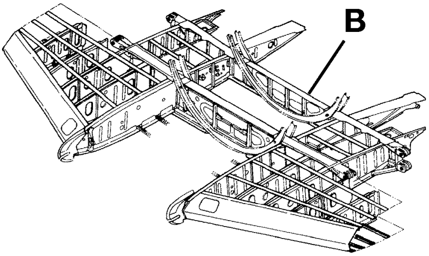

DETAIL A

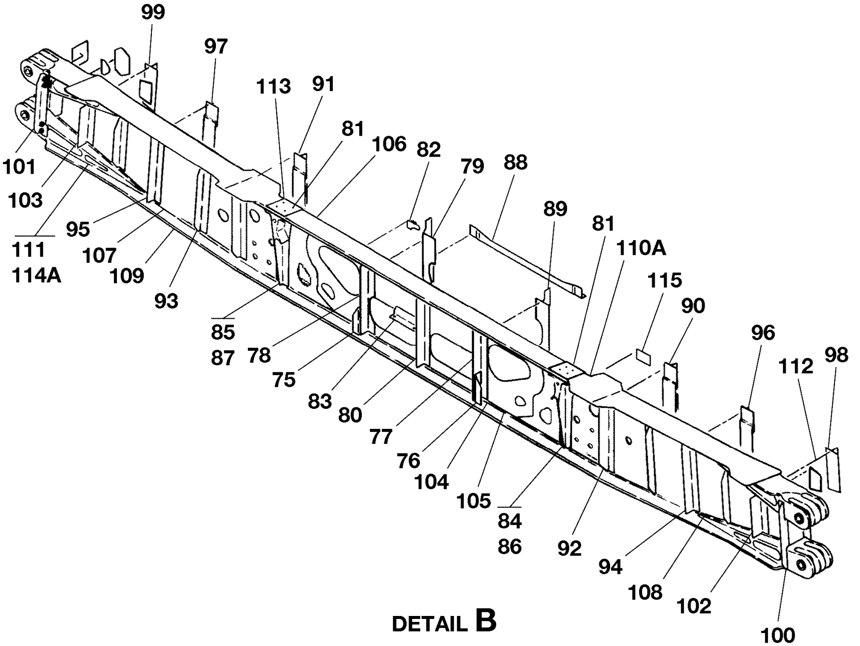

DETAIL B

5610T1049

REAR SPAR ASSY
FIGURE 05 (SHEET 2)

FIG ITEM	PART NUMBER	NOMENCLATURE 1 2 3 4 5 6 7			UNITS PER ASSY
05					
75	6511159-11	. . ANGLE-FORWARD RH AFT LH			01
76	6511159-12	. . ANGLE-FORWARD LH AFT RH			03
77	6511159-13	. . STIFFENER-LH			01
78	6511159-14	. . STIFFENER-RH			01
79	6511159-16	. . STIFFENER			01
80	6511159-17	. . STIFFENER			01
81	6511035-26	. . PLATE			02
82	6511035-34	. . CLIP			01
83	6511035-35	. . BRACKET			01
84	6511162-1	. . FITTING			01
85	6511162-2	. . FITTING			01
86	6511162-3	. . FITTING			01
87	6511162-4	. . FITTING			01
88	6511159-26	. . STIFFENER			01
89	6511159-27	. . STIFFENER			01
90	6521535-3	. . T.E. RIB ANGLE-LH			01
91	6521535-10	. . T.E. RIB ANGLE-RH			01
92	6521535-11	. . STIFFENER-LH			01
93	6521535-12	. . STIFFENER-RH			01
94	6521535-13	. . STIFFENER-LH			01
95	6521535-14	. . STIFFENER-RH			01
96	6521535-15	. . STIFFENER-LH			01
97	6521535-16	. . STIFFENER-RH			01
98	6521535-17	. . T.E. RIB TEE-LH			01
99	6521535-18	. . T.E. RIB TEE-RH			01
100	6521535-19	. . RIB TEE-LH			01
101	6521535-20	. . RIB TEE-RH			01
102	6521535-6	. . STIFFENER-LH			01
103	6521535-22	. . STIFFENER-RH			01
104	6521539-2	. . REAR SPAR BOND ASSY			01
105	6511159-40	. . . DOUBLER			02
106	6521532-1	. . . REAR SPAR CARRY THRU CAP-UPR			01
107	6521534-2	. . . WEB			01
108	6521535-9	. . . DOUBLER			02
109	6521536-1	. . . REAR SPAR CARRY THRU CAP-LWR			01
- 110	6521549-1	. . SPLICE STRAP UPR	0539	0651	01
110A	6521549-4	. . SPLICE STRAP UPR	0652	& ON	01
111	6521549-3	. . SPLICE STRAP LWR			01
112	6522638-1	. . TOOLING HOLE BRACKET			02
113	HL18PB5-9	. . PIN	0539	& ON	08 R
- 114	MS21047L08	. . NUTPLATE	0539	0647	14
114A	MS21047L3	. . NUTPLATE	0648	& ON	14
115	MS27253-1	. . PLATE IDENTIFICATION-FSO S4053-1 OR S2674-3			NP
- 116	S4053-1	. . PLATE IDENTIFICATION-FOR SPARES ONLY REFER TO NOTE 1			01
- 116A	S2674-3	. . PLATE IDENTIFICATION-FOR SPARES ONLY			01

NOTE 1—PERMISSIBLE TO USE REMAINING STOCK OF MS27253-1

- ITEM NOT ILLUSTRATED

A15100

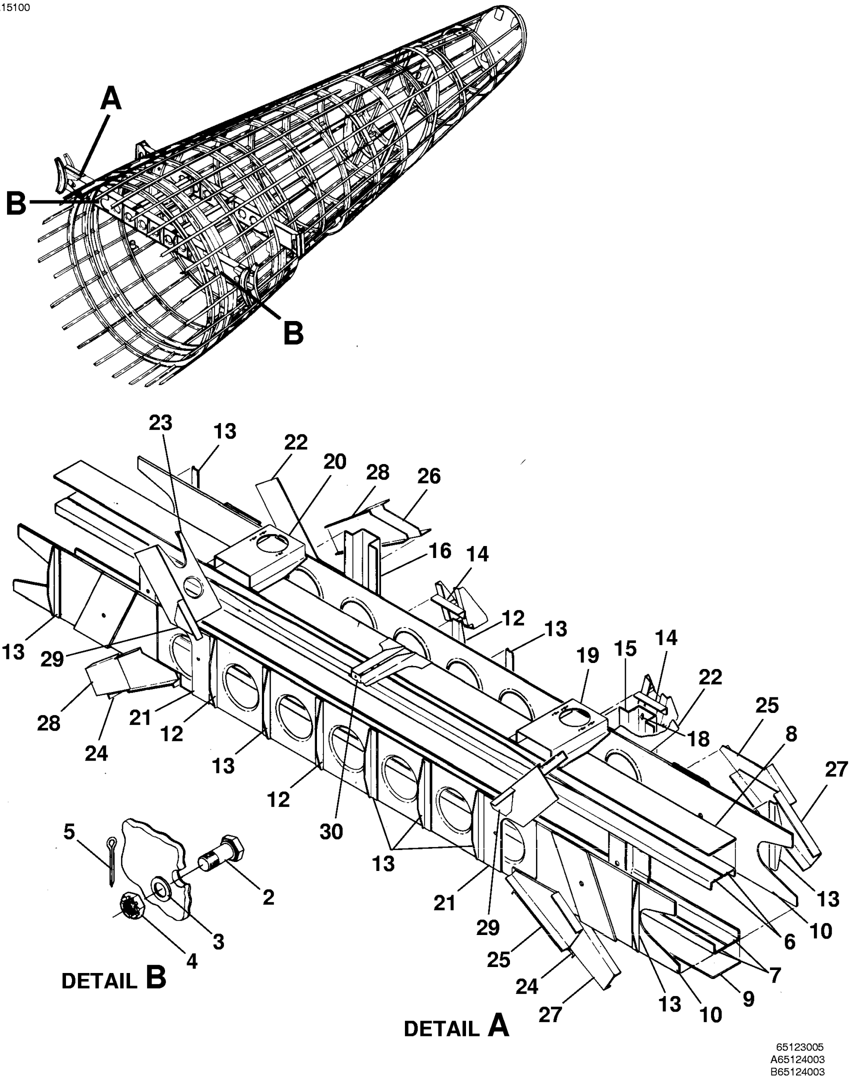

TAILCONE SUPPORTS
FIGURE 01 (SHEET 1)

FIG ITEM	PART NUMBER	NOMENCLATURE 1 2 3 4 5 6 7			UNITS PER ASSY
01					
-		TAILCONE SUPPORTS	0001	0538	RF
- 1	5512040-65	. CARRY THRU ASSY-FORWARD	0001	0091	01
- 1A	5512040-73	. CARRY THRU ASSY-FORWARD	0092	0538	01
		ATTACHING PARTS			
2	NAS464P6-4	. BOLT			04
3	NAS1149F0663P	. WASHER			04
4	AN320-6	. NUT			04
5	MS24665-289	. PIN-COTTER			04
		—*—			
6	5512040-33	. . ANGLE			02
7	5512040-32	. . ANGLE			02
8	5512040-30	. . CAP			01
9	5512040-31	. . CAP			01
10	5512040-45	. . WEB ASSY-BONDED	0001	0091	02
- 10A	5512040-68	. . WEB ASSY-BONDED	0092	0538	02
- 11	5512040-35	. . CHANNEL			02
12	5512040-13	. . STIFFENER			02
13	5512040-38	. . STIFFENER			12
14	5512040-15	. . ANGLE			02
15	5512040-61	. . BRACKET ASSY-LH			01
16	5512040-60	. . BRACKET ASSY-RH			01
- 17	5512040-59	. . . CLIP			02
18	MS21069L3	. . . NUTPLATE			04
19	5517400-7	. . BRACKET-LH			01
20	5517400-8	. . BRACKET-RH			01
21	5512040-47	. . BRACE			02
22	5512040-48	. . BRACE			02
23	5512040-49	. . CHANNEL			02
24	5512040-50	. . CHANNEL			02
25	5512040-51	. . CHANNEL-LH			02
26	5512040-52	. . CHANNEL-RH			02
27	5512040-53	. . CHANNEL-LH			02
28	5512040-54	. . CHANNEL-RH			02
29	5512040-58	. . GUSSET			02
30	5512000-4	. BRACKET			01

- ITEM NOT ILLUSTRATED

A15105

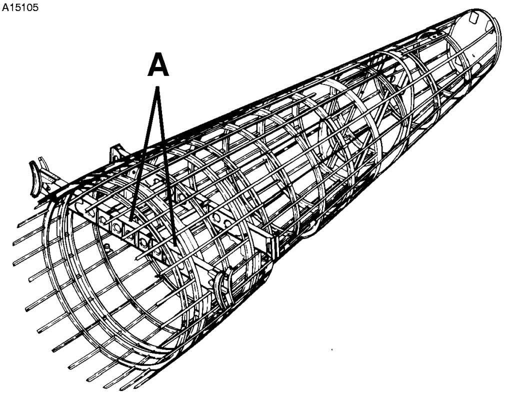

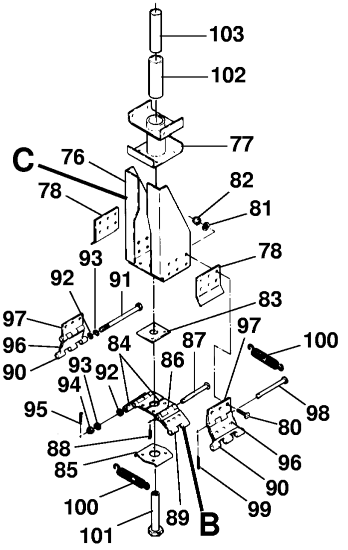

DETAIL A
AIRPLANES -0001 THRU -0118
NOT INCORPORATING SB560-78-02

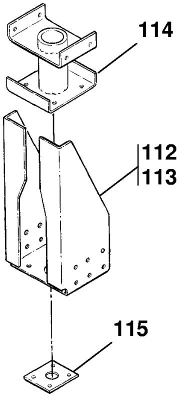

DETAIL C
AIRPLANES -0119 THRU -0538

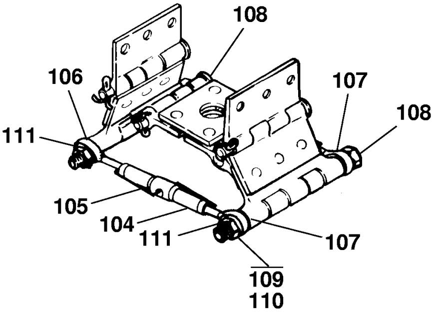

DETAIL B
AIRPLANES -0001 THRU -0118
INCORPORATING SB560-78-02

65123005
A55613063
B55551020A
C55613063

TAILCONE SUPPORTS
FIGURE 01 (SHEET 2)

FIG ITEM	PART NUMBER	NOMENCLATURE 1 2 3 4 5 6 7			UNITS PER ASSY
01					
- 75	5512043-1	. BRACKET ASSY-LOAD LIMITER FSO 6561050-1 REFER TO NOTE 1	0001	0118	02
76	5512043-15	. . BRACKET ASSY	0001	0118	01
77	5512043-20	. . . GUIDE ASSY-WELDED	0001	0118	01
78	5512043-22	. . . STOP	0001	0118	02
- 79	5512043-2	. . HINGE ASSY	0001	0118	01
		ATTACHING PARTS			
80	MS27039-0809	. . SCREW	0001	0118	06
81	NAS1149FN832P	. . WASHER	0001	0118	06
82	MS21044N08	. . NUT	0001	0118	06
		—*—			
83	5512043-13	. . . PLATE	0001	0118	01
84	5512043-6	. . . HALF HINGE-LH AND RH	0001	0118	02
85	5512043-12	. . . SPLICE	0001	0118	01
86	5512043-7	. . . HALF HINGE-LH AND RH	0001	0118	02
87	MS20392-2C49	. . . PIN-HINGE	0001	0118	02
88	MS24665-132	. . . COTTER PIN-LH AND RH	0001	0118	02
89	5512043-8	. . . HALF HINGE-LH AND RH	0001	0118	02
90	5512043-9	. . . HALF HINGE-LH AND RH	0001	0118	02
91	AN3-31	. . . BOLT-USED AS HINGE PIN LH AND RH	0001	0118	02
92	NAS1149F0363P	. . . WASHER	0001	0118	04
93	NAS1149F0332P	. . . WASHER	0001	0118	04
94	MS17825-3	. . . NUT	0001	0118	02
95	MS24665-132	. . . COTTER PIN	0001	0118	02
96	5512043-11	. . . HALF HINGE-LH AND RH	0001	0118	02
97	5512043-10	. . . HALF HINGE-LH AND RH	0001	0118	02
98	MS20392-2C65	. . . PIN-HINGE	0001	0118	02
99	MS24665-132	. . . COTTER PIN	0001	0118	02
100	5512043-14	. . SPRING-LH AND RH	0001	0118	02
101	5512043-3	. SUPPORT-CABLE			01
102	5512043-4	. BUSHING			01
103	5512043-5	. SPACER			01
104	MS21251-B3S	. TURNBUCKLE REFER TO NOTE 2	0001	0118	02
105	MS21256-1	. CLIP-LOCKING REFER TO NOTE 2	0001	0118	04
106	MS21254-3LS	. EYE-END REFER TO NOTE 2	0001	0118	02
107	MS21254-3RS	. EYE-END REFER TO NOTE 2	0001	0118	02
108	AN3-33A	. BOLT REFER TO NOTE 2	0001	0118	02
109	NAS1149F0363P	. WASHER REFER TO NOTE 2	0001	0118	04
110	NAS1149F0332P	. WASHER REFER TO NOTE 2	0001	0118	04
111	MS21042N3	. NUT REFER TO NOTE 2	0001	0118	04
112	6561050-1	. BRACKET ASSY-LH AND RH	0119	0538	02
113	5512043-17	. . BRACKET	0119	0538	02
114	5512043-20	. . GUIDE ASSY	0119	0538	02
115	6561050-2	. . PLATE	0119	0538	02

NOTE 1—AIRPLANES -0001 THRU -0118 NOT INCORPORATING SB560-78-02

NOTE 2—AIRPLANES -0001 THRU -0118 INCORPORATING SB560-78-02

- ITEM NOT ILLUSTRATED

A15108

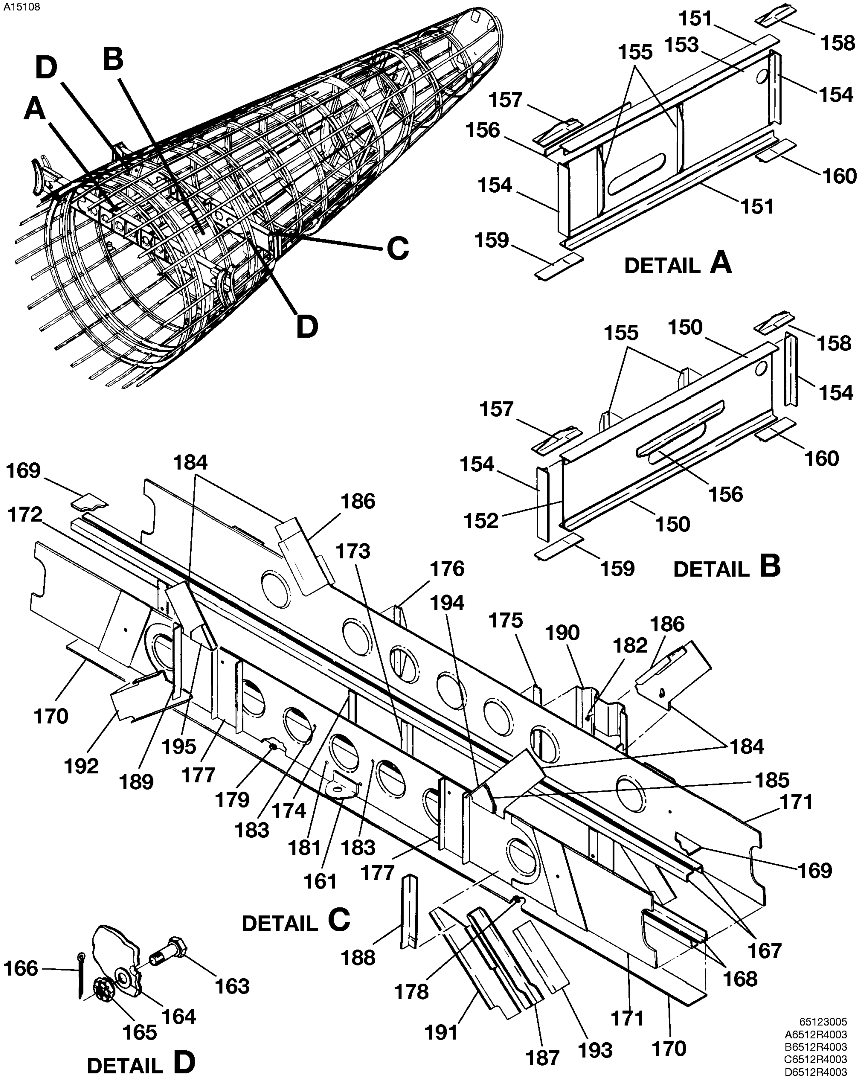

TAILCONE SUPPORTS
FIGURE 01 (SHEET 3)

FIG ITEM	PART NUMBER	NOMENCLATURE 1 2 3 4 5 6 7				UNITS PER ASSY
01						
150	5512041-11	. CAP-LH				02
151	5512041-6	. CAP-RH				02
152	5512041-3	. WEB-LH				01
153	5512041-4	. WEB-RH				01
154	5512041-5	. TEE				04
155	5512041-9	. STIFFENER				04
156	5512041-10	. BRACE				02
157	5512041-7	. CLIP-TEE				02
158	5512041-8	. CLIP-TEE				02
159	5512041-13	. CLIP-TEE				02
160	5512041-12	. CLIP-TEE				02
161	5512045-59	. BRACKET				01
- 162	5512045-58	. CARRY THRU ASSY-AFT		0001	0201	01
- 162A	5512045-64	. CARRY THRU ASSY-AFT		0202	0538	01
		ATTACHING PARTS				
163	NAS464P4-4	. BOLT				04
164	NAS1149F0463P	. WASHER				04
165	AN320-4	. NUT				04
166	MS24665-212	. PIN-COTTER				04
		—*—				
167	5512045-10	. . ANGLE				02
168	5512045-5	. . ANGLE				02
169	5512045-23	. . CAP-UPPER				01
170	5512045-24	. . CAP-LOWER				01
171	5512045-25	. . WEB ASSY		0001	0201	02
- 171A	5512045-65	. . WEB ASSY		0202	0538	02
172	5512045-12	. . CHANNEL				02
173	5512045-15	. . STIFFENER-LH				01
174	5512045-14	. . STIFFENER-RH				01
175	5512045-8	. . STIFFENER-LH				01
176	5512045-16	. . STIFFENER-RH				01
177	5512045-13	. . CHANNEL				02
178	TA02D713D04SR	. . CLAMP	V84971			01
179	TA2D713D4SR	. . CLAMP	V84971			01
- 180	TA2D713D04EP	. . CLAMP ALT FOR TA2D713D4SR	V84971			01
181	MS21060L3	. . NUTPLATE				02
182	MS21075L4N	. . NUTPLATE				04
183	MS21069L3	. . NUTPLATE				02
184	5512045-43	. . BRACE-UPPER				04
185	5512045-40	. . SHIM				01
186	5512045-44	. . CHANNEL-UPPER				02
187	5512045-45	. . CHANNEL-LOWER				02
188	5512045-46	. . STIFFENER-LH				02
189	5512045-47	. . STIFFENER-RH				02
190	5512045-50	. . BRACKET ASSY				01
191	5512045-61	. . BRACE-LOWER				02
192	5512045-60	. . BRACE-LOWER				02
193	5512045-53	. . CHANNEL-LOWER				02
194	5512045-55	. . GUSSET				02
195	5512045-56	. . GUSSET				02

- ITEM NOT ILLUSTRATED

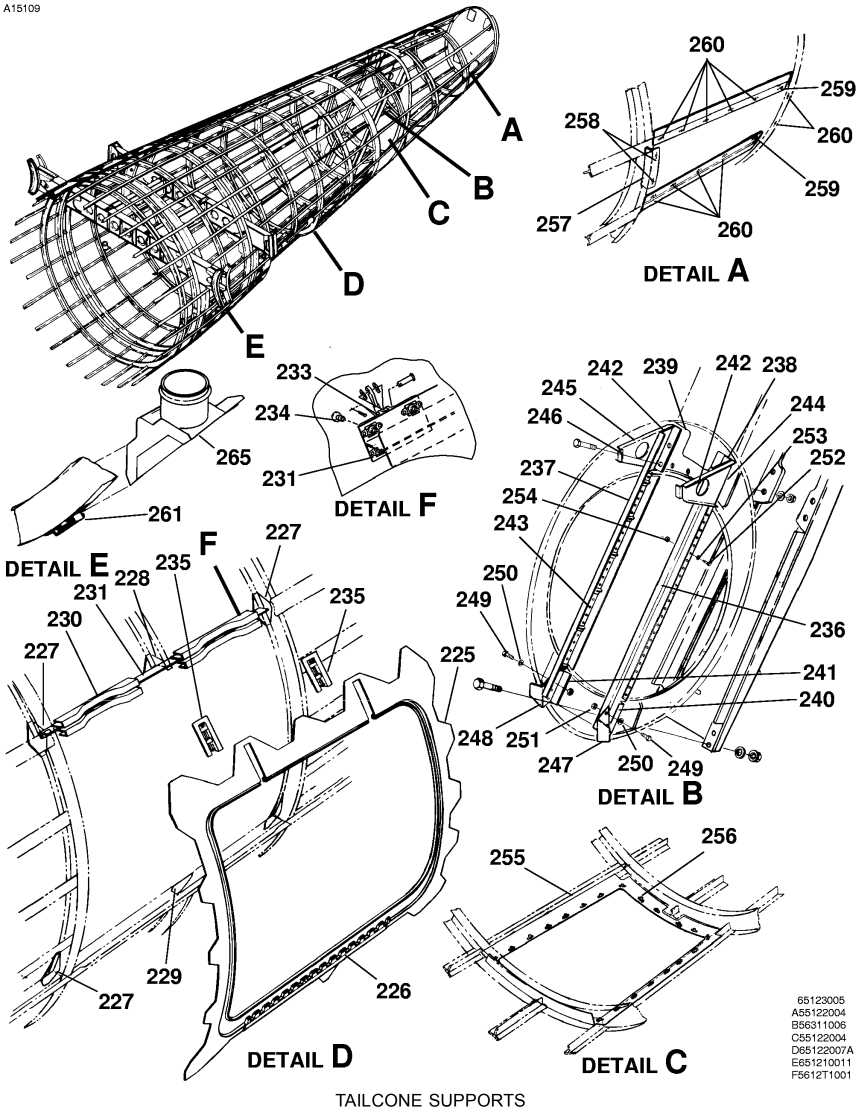

TAILCONE SUPPORTS
FIGURE 01 (SHEET 4)

FIG ITEM	PART NUMBER	NOMENCLATURE 1 2 3 4 5 6 7			UNITS PER ASSY
01					
225	5512063-2	. FRAME			01
226	5512060-14	. HINGE HALF			01
227	5512060-11	. GUSSET-UPPER AND LOWER, FORWARD AND AFT			04
228	5512060-13	. GUSSET-UPPER CENTER			01
229	5512060-23	. GUSSET-LOWER CENTER-REFER TO NOTE 1	0170	0538	01
- 229A	5512060-12	. GUSSET-LOWER CENTER-REFER TO NOTE 2 FSO 5512060-23	0001	0169	NP
230	5512060-8	. DOUBLER			04
231	5512060-22	. ANGLE ASSY			01
- 232	MS21059L3	. . NUTPLATE			02
233	5512064-33	. ANCHOR			01
		ATTACHING PARTS			
234	MS27039-1-09	. SCREW			04
		—*—			
235		. HOUSING ASSY TAILCONE DOOR LATCH REFER TO 52-40-00 FIGURE 01			RF
236	5512031-9	. CAP-LH			01
237	5512031-10	. CAP-RH			01
238	5512031-20	. CAP-UPPER LH			01
239	5512031-21	. CAP-UPPER RH			01
240	5512031-15	. CAP-LOWER LH			01
241	5512031-16	. CAP-LOWER RH			01
242	5512031-22	. WEB			02
243	5512031-13	. ANGLE			12
244	5512031-17	. GUSSET-UPPER LH			01
245	5512031-18	. GUSSET-UPPER RH			01
246	5512031-19	. ANGLE			02
247	5512031-5	. ANGLE-LOWER LH			01
248	5512031-6	. ANGLE-LOWER RH			01
249	MS27039-8-09	. SCREW			05
250	NAS1149CN832R	. WASHER			05
251	MS21043-08	. NUT			05
252	MS27039-1-09	. SCREW			27
253	NAS1149C0363R	. WASHER			27
254	MS21043-3	. NUT			27
255	5512095-8	. DOUBLER ASSY			01
256	MS21047L3	. . NUTPLATE			24
257	5512091-6	. ANGLE			01
258	MS21049L08	. NUTPLATE			02
259	MS21053L08	. NUTPLATE			02
260	MS21047L08	. NUTPLATE			11
261	6526351-31	. BRACKET ASSY-LH			02
- 262	MS21075L3	. . NUTPLATE			02 R
- 263	6526351-32	. BRACKET ASSY-RH			02
- 264	MS21075L3N	. . NUTPLATE			02
265	6516002-1	. SHROUD BOX ASSY-LH			01
- 266	6516002-2	. SHROUD BOX ASSY-RH	0001	0306	01
- 266A	6516002-10	. SHROUD BOX ASSY-RH	0307	0538	01

NOTE 1—AIRPLANES -0170 AND ON AND AIRPLANES -0001 THRU -0169 INCORPORATING SB560-53-04.

NOTE 2—AIRPLANES -0001 THRU -0169 NOT INCORPORATING SB560-53-04.

- ITEM NOT ILLUSTRATED

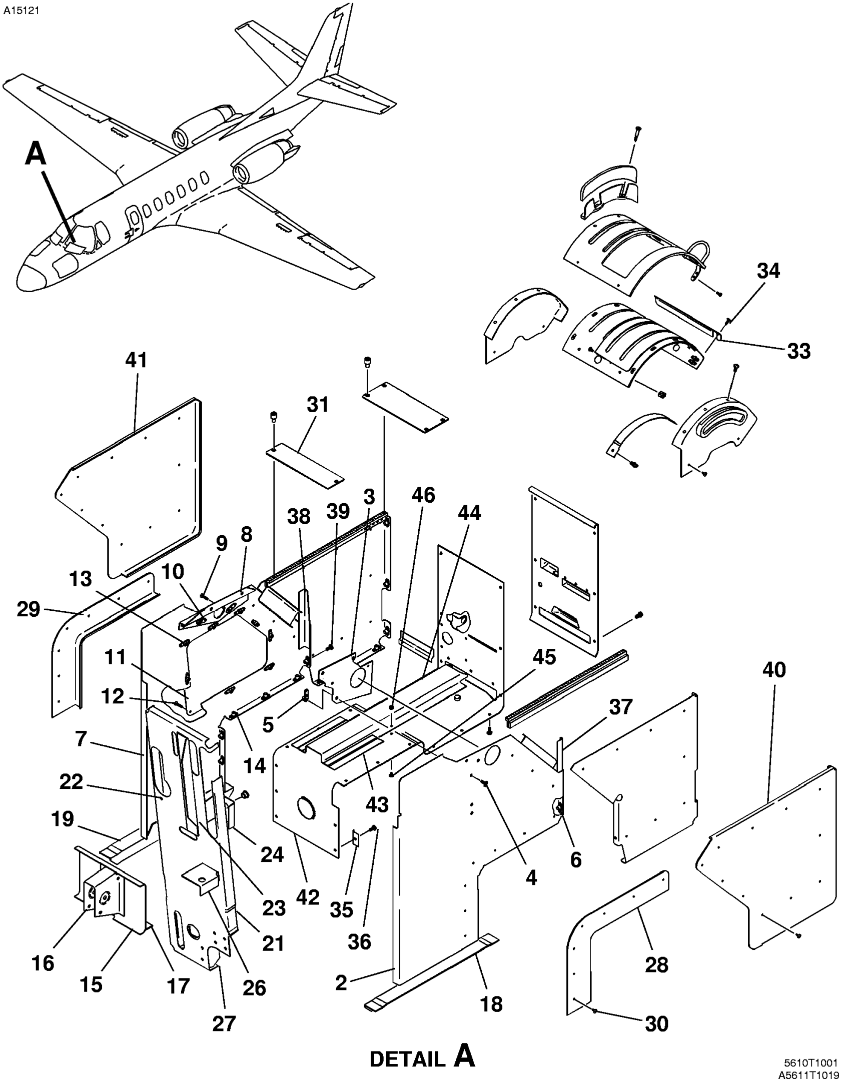

CONTROL PEDESTAL
FIGURE 01 (SHEET 1)

FIG ITEM	PART NUMBER	NOMENCLATURE 1 2 3 4 5 6 7				UNITS PER ASSY
01						
-		CONTROL PEDESTAL		0002	0259	RF
- 1	6565700-35	. PEDESTAL ASSY				01
- 1A	6565700-48	. PEDESTAL ASSY FRENCH CERTIFIED AIRPLANES		0058	0259	01
2	6565700-41	. . PANEL ASSY-LH				01
3	5565701-23	. . . BRACKET ASSY				01
		ATTACHING PARTS				
4	MS24694-S2	. . . SCREW				02
		—*—				
5	MS21051L08	. . . . NUTPLATE				02
6	MS21069L08K	. . . NUTPLATE				07
7	6565700-46	. . PANEL ASSY-RH				01
8	5565701-27	. . . BRACKET ASSY				01
		ATTACHING PARTS				
9	MS24693-S28	. . . SCREW				05
		—*—				
10	MS21052L06	. . . . NUTPLATE				05
11	5565701-16	. . . COVER RH COVER				01
		ATTACHING PARTS				
12	MS24693-S28	. . . SCREW				09
		—*—				
13	MS21048L06	. . . NUTPLATE				09
14	MS21069L08K	. . . NUTPLATE				08
15	5565700-12	. . BRACKET				01
16	5565709-2	. . BRACKET				01
17	5565700-10	. . ANGLE TRIM				01
18	5565700-5	. . BRACKET-LH PEDESTAL MOUNT				01
19	5565700-6	. . BRACKET-RH PEDESTAL MOUNT				01
- 20	5565705-15	. . BULKHEAD ASSY-PEDESTAL				01
21	5565706-12	. . . BULKHEAD ASSY				01
22	MS21047L3	. . . . NUTPLATE				01
23	5565705-11	. . . ANGLE				01
24	5565711-1	. . . BRACKET ASSY-AILERON TRIM SHAFT				01
- 25	S1004-44A	. . . . BEARING				01
26	5565705-4	. . . BRACKET				01
27	5565705-17	. . . DOUBLER				01
28	6565710-7	. . EDGE TRIM LH				01
29	6565710-8	. . EDGE TRIM RH				01
		ATTACHING PARTS				
30	S1021Z4-4B	. . SCREW				07
		—*—				
31	6565700-19	. . PLATE ASSY REFER TO NOTE 1				01
- 32	PFSC3-1/2-38A	. . . STUD ASSY	V72794			02
33	6565700-39	. . GUARD		0045	0259	01
		ATTACHING PARTS				
34	CM3657-1	. . SCREW		0045	0259	02
		—*—				
35	5565702-9	. . BRACKET				23
		ATTACHING PARTS				
36	MS35206-243	. . SCREW				23
		—*—				
37	6565710-37	. . ANGLE-LH				01
38	6565710-38	. . ANGLE-RH				01
		ATTACHING PARTS				
39	MS35206-243	. . SCREW				02
		—*—				
40	6565710-67	. . EDGE TRIM LH				01
41	6565710-68	. . EDGE TRIM RH				01
42	6565710-113	. . FACE PLATE ASSY				01
43	5565712-11	. . . CLIP				02
44	5590031-17	. . CHAIN GUARD				01
		ATTACHING PARTS				
45	MS35206-225	. . SCREW				02
46	MS21042-06	. . NUT				02
		—*—				

NOTE 1—FOR BLANKING PLATES USED WITH AVIONIC COMBINATIONS NOT SHOWN REFER TO CHAPTER 53 OF CESSNA MAINTENANCE MANUAL.

- ITEM NOT ILLUSTRATED

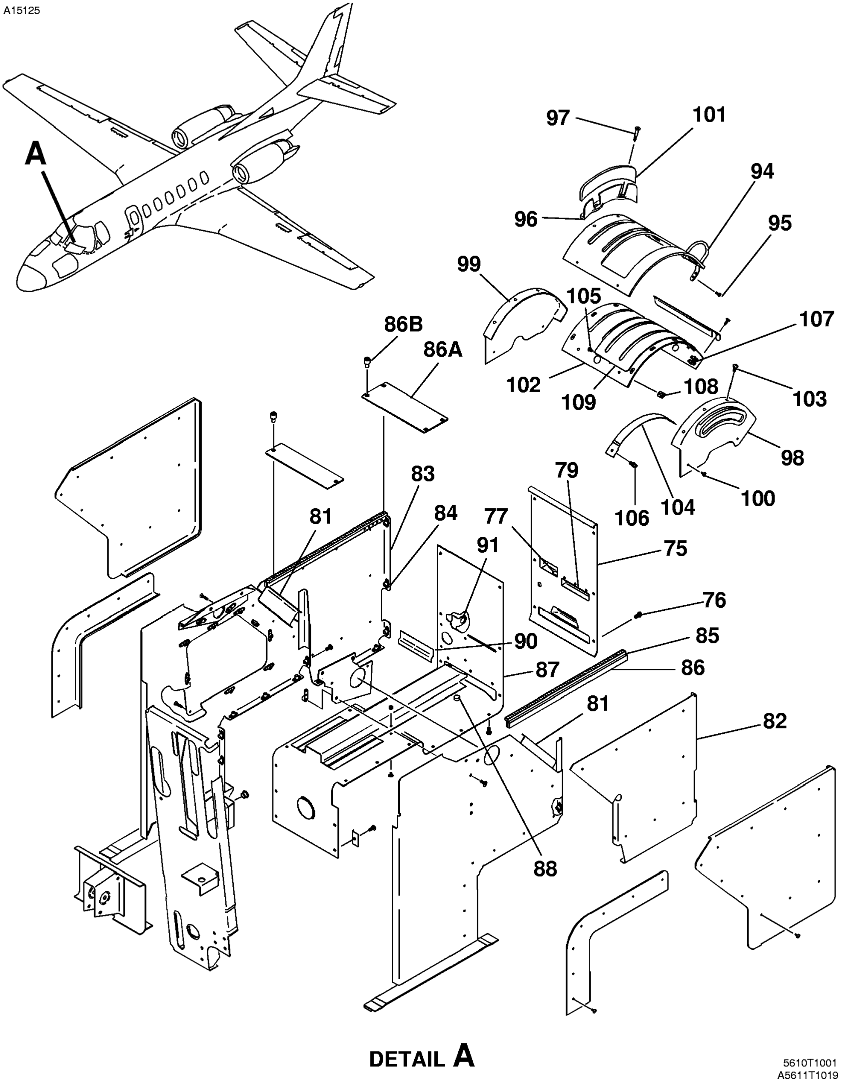

CONTROL PEDESTAL
FIGURE 01 (SHEET 2)

FIG ITEM	PART NUMBER	NOMENCLATURE 1 2 3 4 5 6 7			UNITS PER ASSY
01					
75	6565710-57	. . TRIM ASSY			01
		ATTACHING PARTS			
76	MS35206-243	. . SCREW			06
		—*—			
77	5565717-15	. . . LENS			01
- 78	5565717-14	. . . LENS			01
79	5565717-19	. . . TRIM-MARKER			05
- 80	5565717-20	. . . TRIM-MARKER			01
81	6565710-61	. . CHANNEL			02
82	6565710-65	. . PANEL ASSY-LH			01
83	6565710-66	. . PANEL ASSY-RH			01
84	MS21069L08	. . . NUTPLATE			06
85	6565710-69	. . DZUS FASTENER			02
86	6565710-70	. . FILLER			02
86A	6565710-78	. . PLATE REFER TO NOTE 1			01
86B	PFSC335-38A	. . STUD ASSY			04
87	6565710-64	. . FACE PLATE ASSY			01
88	5565704-3	. . . BEARING			01
- 89	MS16624-1037	. . . RING-RETAINING			01
90	5565712-10	. . . GUIDE			01
91	5565712-7	. . . BRACKET-LIGHT MOUNT			01
- 92		. . . LIGHT ASSY-TRIM TAB-REFER TO 33-10-00 FIGURE 01 V72619			RF
- 93		. . . DELETED-NOT USED			
94	6565710-47	. GUARD ASSY			01
		ATTACHING PARTS			
95	MS35207-214	. SCREW			02
		—*—			
96	5565700-34	. GUARD			01
		ATTACHING PARTS			
97	MS24694-S12	. SCREW			02
		—*—			
98	5565717-21	. TRIM-LH			01
99	5565717-22	. TRIM-RH			01
		ATTACHING PARTS			
100	S1021Z4-4B	. SCREW			06
		—*—			
101	5565700-9	. COVER GUARD			01
102	5565703-20	. COVER ASSY			01
		ATTACHING PARTS			
103	MS35206-243	. SCREW			06
		—*—			
104	5565703-8	. . STRAP ASSY			01
		ATTACHING PARTS			
105	MS24693-B824	. . SCREW			02 R
		—*—			
106	MS21069L06	. . . NUTPLATE			02
107	MS21069L06	. . NUTPLATE			02
108	MS21075L04N	. . NUTPLATE			04
109	5565703-11	. COVER-SLOT FSO 5565703-19			NP
- 109A	5565703-19	. COVER-SLOT			01
- 110	5565703-23	. SLOT COVER-DUTCH CERTIFIED AIRPLANES	0100	0259	01

NOTE 1—FOR BLANKING PLATES USED WITH AVIONIC COMBINATIONS NOT SHOWN REFER TO CHAPTER 53 OF CESSNA MAINTENANCE MANUAL.

- ITEM NOT ILLUSTRATED

A15129

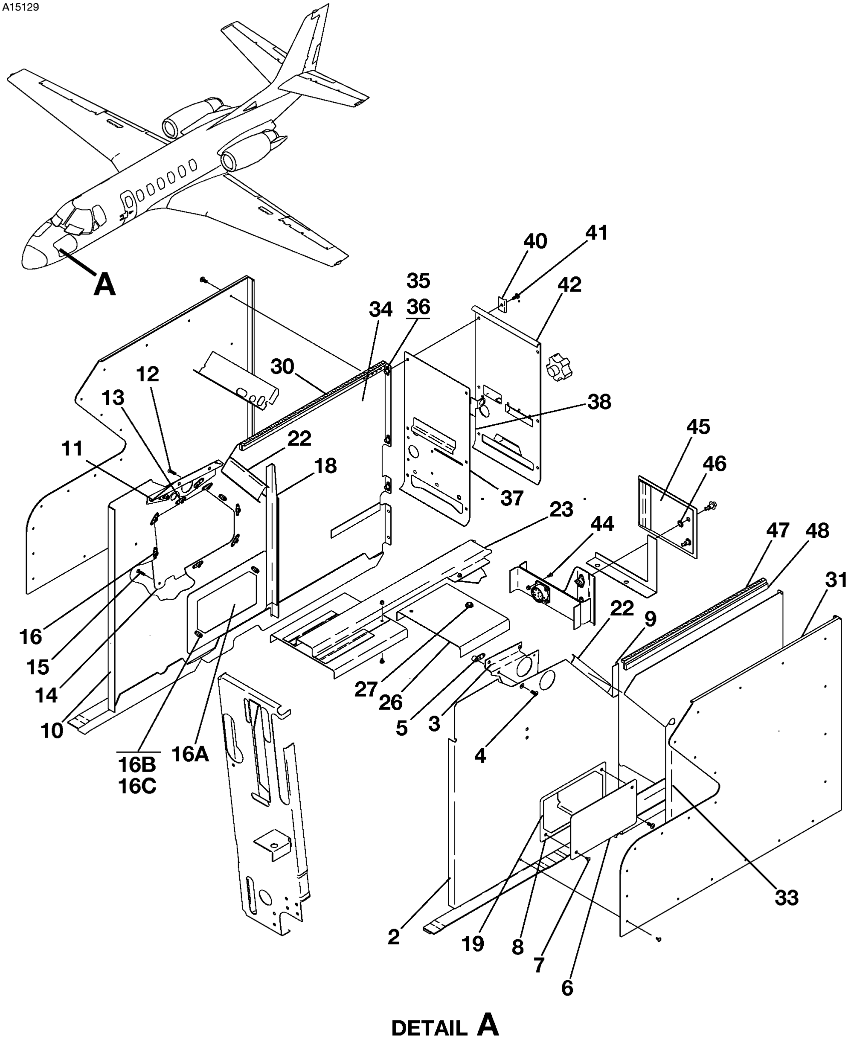

5610T1001A
A5611T1037

CONTROL PEDESTAL
FIGURE 01A (SHEET 1)

FIG ITEM	PART NUMBER	NOMENCLATURE 1 2 3 4 5 6 7			UNITS PER ASSY
01A					
-		CONTROL PEDESTAL	0260	0291	RF
- 1	6565136-2	. PEDESTAL ASSY			01
2	6565136-5	. . PANEL ASSY-LH			01
3	5565701-29	. . . BRACKET ASSY			01
		ATTACHING PARTS			
4	MS24694-S2	. . . SCREW			01
		—*—			
5	MS21051L08	. . . . NUTPLATE			01
6	6565136-18	. . . PLATE-INSPECTION LH			02
		ATTACHING PARTS			
7	MS24693-S28	. . . SCREW			04
		—*—			
8	MS21076L06	. . . NUTPLATE			04
9	6565136-27	. . . ANGLE-LH			01
10	6565136-6	. . PANEL ASSY-RH			01
11	5565701-27	. . . BRACKET ASSY			01
		ATTACHING PARTS			
12	MS24693-S28	. . . SCREW			05
		—*—			
13	MS21052L06	. . . . NUTPLATE			05
14	5565714-16	. . . COVER-RH			01
		ATTACHING PARTS			
15	MS24693-S28	. . . SCREW			09
		—*—			
16	MS21048L06	. . . . NUTPLATE			09
16A	6565136-18	. . . PLATE-INSPECTION RH			02
		ATTACHING PARTS			
16B	MS24693-S28	. . . SCREW			04
		—*—			
16C	MS21076L06	. . . NUTPLATE			04
- 17	CM2692-16-2S	. . . PLUG BUTTON			01
18	6565136-28	. . . ANGLE-RH			01
19	6565136-19	. . SUPPORT ASSY			01
- 20	5565712-11	. . . CLIP			02
- 21		. . POINTER ASSY-AILERON TRIM CONTROL-REFER TO 27-10-02 FIGURE 01			RF
22	6565191-30	. . CHANNEL			02
23	6565136-24	. . CHAIN GUARD			01
		ATTACHING PARTS			
- 24	MS35206-225	. . SCREW			04
- 25	MS21042-06	. . NUT			04
		—*—			
26	6565136-9	. . PANEL ASSY			01
27	5565704-3	. . . BEARING			01
- 28	MS16624-1037	. . . RING-RETAINING			01
- 29		. . PULLEY ASSY-AILERON TRIM CONTROL-REFER TO 27-10-02 FIGURE 01			RF
30	6565136-4	. . PANEL-RH SIDE TRIM			01
31	6565136-3	. . PANEL-LH SIDE TRIM			01
- 32		. . SPROCKET ASSY-RUDDER TRIM CONTROL-REFER TO 27-20-02 FIGURE 01			RF
33	6565136-11	. . PANEL ASSY-LH			01
34	6565136-12	. . PANEL ASSY-RH			01
35	MS21069L08	. . . NUTPLATE			10
36	S1021Z4-4B	. . SCREW			AR
37	6565136-25	. . FACE PLATE ASSY			01
38	5565712-7	. . . BRACKET			01
- 39		. . . LIGHT ASSY-TRIM TAB-REFER TO 33-10-00 FIGURE 01			RF
40	5565702-9	. . BRACKET			10
41	AN525-832R7	. . SCREW			10
42	6565191-37	. . FACE TRIM ASSY			01
- 43		. . GEAR ASSY-AILERON TRIM CONTROL-REFER TO 27-10-02 FIGURE 01			RF
44	MS24694-S3	. . SCREW			03
45	6565136-15	. . PANEL-FACE TRIM			01
46	6565136-17	. . PLATE-INSPECTION			01
47	6565191-41	. . DZUS STRIP			02
48	6565191-42	. . FILLER			02

- ITEM NOT ILLUSTRATED

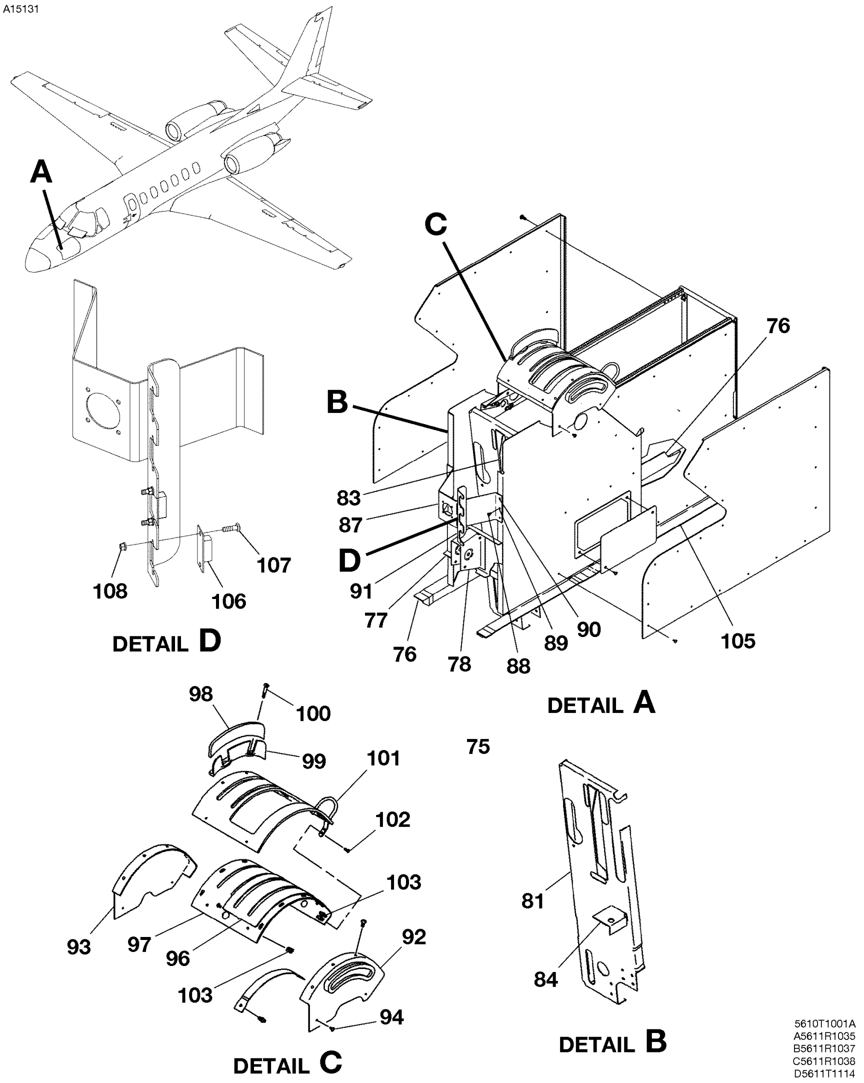

CONTROL PEDESTAL
FIGURE 01A (SHEET 2)

FIG ITEM	PART NUMBER	NOMENCLATURE 1 2 3 4 5 6 7				UNITS PER ASSY
01A						
75	5565700-5	. BRACKET-LH PEDESTAL MOUNT				01
76	5565700-6	. BRACKET-RH PEDESTAL MOUNT				01
77	5565700-12	. BRACKET				01
78	5565709-2	. BRACKET				01
- 79	5565705-18	. BULKHEAD ASSY-PEDESTAL-FSO 5565705-22		0260	0298	NP
- 80	5565705-22	. BULKHEAD ASSY-PEDESTAL				01
81	5565706-14	. . BULKHEAD ASSY				01
- 82	MS21047L3	. . . NUTPLATE				01
83	5565711-1	. . BRACKET ASSY				01
84	5565705-4	. . BRACKET				01
- 85	5565705-11	. . ANGLE-FSO 5565705-19				NP
- 86	5565705-19	. . ANGLE				01
87	6565136-32	. BRACKET				01
		ATTACHING PARTS				
88	MS35206-229	. SCREW				06
		—*—				
89	MS21051L06	. . NUTPLATE				04
90	MS21048L06	. . NUTPLATE				02
91	6565136-33	. ANGLE				01
92	5565717-21	. TRIM-UPPER LH-FSO 6619135-1				NP
- 92A	6619135-1	. TRIM-UPPER LH				01
93	5565717-22	. TRIM-UPPER RH				01
94	S1021Z4-4B	. SCREW				04
- 95	5565703-21	. COVER ASSY-THRUST REVERSER				01
96	5500101-11	. . COVER-SLOT				01
97	5565703-20	. . COVER ASSY				01
98	5565700-9	. COVER GUARD				01
99	6565700-34	. GUARD				01
		ATTACHING PARTS				
100	MS24694-S12	. SCREW				02
		—*—				
101	6565710-47	. GUARD ASSY				01
		ATTACHING PARTS				
102	MS35207-214	. SCREW				02
103	MS21042L06	. NUT				02
		—*—				
- 104	6565136-22	. . SUPPORT-RH-FSO 6565136-62		0260	0298	NP
- 104A	6565136-62	. . SUPPORT-RH				01
105	6565136-23	. . SUPPORT-LH-FSO 6565136-63		0260	0298	NP
- 105A	6565136-63	. . SUPPORT-LH				01
106	D9/370000V30	. LOCK TAB-TCAS REFER TO NOTE 1	V28198			02 R
		ATTACHING PARTS				
107	MS35206-215	. SCREW				02 R
108	MS21042-04	. NUT				02 R
		—*—				

NOTE 1—AIRPLANES -0260 THRU -0291 INCORPORATING SB560-34-115. R

- ITEM NOT ILLUSTRATED

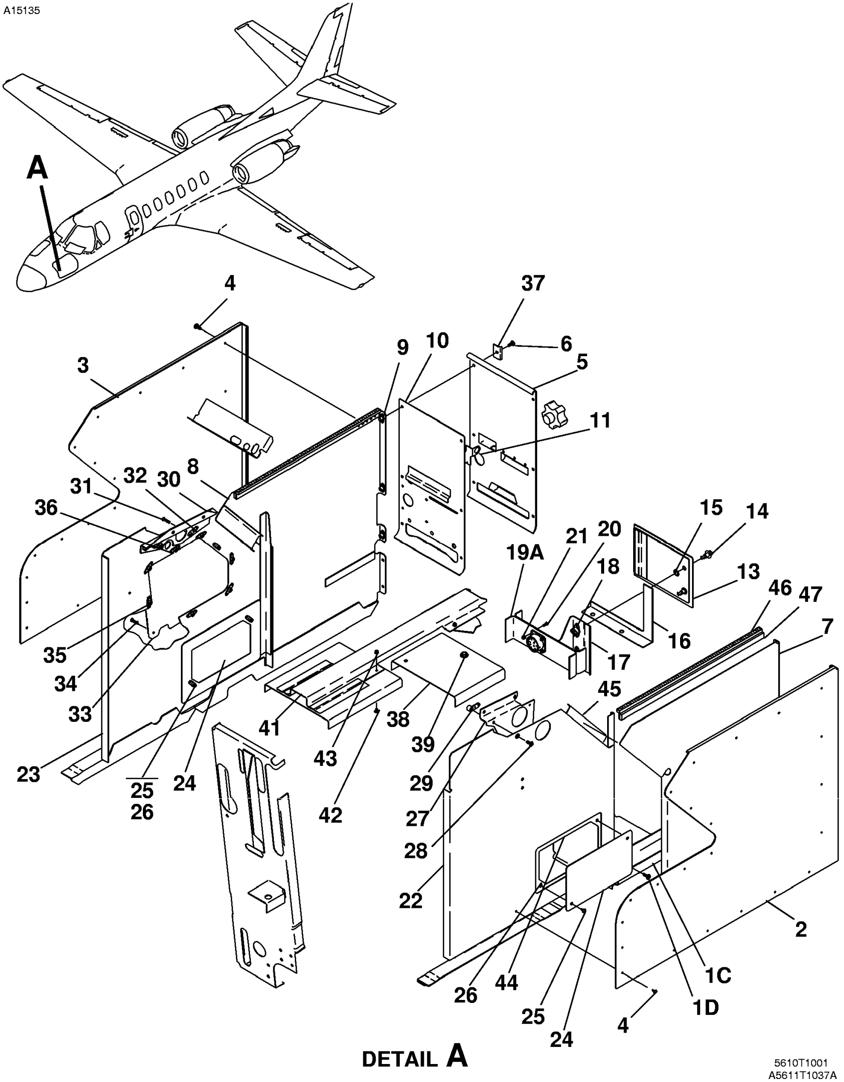

CONTROL PEDESTAL
FIGURE 01B (SHEET 1)

FIG ITEM	PART NUMBER	NOMENCLATURE 1 2 3 4 5 6 7			UNITS PER ASSY
01B					
-		CONTROL PEDESTAL	0292	0538	RF
- 1	6565136-35	. PEDESTAL ASSY-CONTROL EXTENDED FSO 6565136-49	0292	0400	NP
- 1A	6565136-49	. PEDESTAL ASSY-CONTROL EXTENDED	0401	0479	01
- 1B	6565136-57	. PEDESTAL ASSY-CONTROL EXTENDED	0480	0538	01
1C	9656075-2	. . GUARD ASSY	0401	0538	01
		ATTACHING PARTS			
1D	MS27039-0806	. . SCREW	0401	0538	04
		—*—			
- 1E	MS21071L08K	. . . NUTPLATE	0401	0538	04
2	6565136-3	. . PANEL ASSY-SIDE TRIM LH	0292	0479	01
- 2A	6565136-65	. . PANEL ASSY-SIDE TRIM LH	0480	0538	01
3	6565136-4	. . PANEL ASSY-SIDE TRIM RH	0292	0479	01
- 3A	6565136-64	. . PANEL ASSY-SIDE TRIM RH	0480	0538	01
4	S1021Z4-4B	. . SCREW			AR
5	6565191-37	. . FACE TRIM ASSY			01
6	AN525-832R7	. . SCREW			06
7	6565136-47	. . PANEL ASSY-SIDE LH			01
8	6565136-46	. . PANEL ASSY-SIDE RH			01
9	MS21069L08	. . . NUTPLATE			03
10	6565136-25	. . FACE PLATE ASSY			01
11	5565712-7	. . . BRACKET-LIGHT MOUNT			01
- 12		. . . LIGHT ASSY-TRIM TAB-REFER TO 33-10-00 FIGURE 01			RF
13	6565136-36	. . FACE TRIM BOND ASSY	0260	0538	01
14	S3275B5S	. . . STUD			02
15	S3275-300	. . . RETAINER RING			02
16	6565136-43	. . TRIM PANEL	0260	0538	01
17	6565136-41	. . ZEE ASSY	0260	0538	01
18	S3275E202	. . . RECEPTACLE			02
- 19	6565136-44	. . BRACKET ASSY-CONNECTOR MOUNT	0260	0538	01
19A	9656075-5	. . BRACKET ASSY-CONNECTOR MOUNT	0401	0538	01
20	MS24694-S3	. . SCREW-CONNECTOR ATTACH			04
21	MS21043-04	. . NUT-CONNECTOR ATTACH			04
22	6565136-5	. . PANEL ASSY-LH	0292	0479	01
- 22A	6565136-55	. . PANEL ASSY-LH	0480	0538	01
23	6565136-6	. . PANEL ASSY-RH			01
24	6565136-18	. . . PLATE-INSPECTION-LH AND RH			01
25	MS24693-S28	. . . SCREW			02
26	MS21076L06	. . . NUTPLATE			02
27	5565701-29	. . . BRACKET ASSY-LH	0292	0479	01
- 27A	5565701-23	. . . BRACKET ASSY-LH	0480	0538	01
28	MS24694-S2	. . . SCREW	0292	0479	01
- 28A	MS24694-S2	. . . SCREW	0480	0538	02
29	MS21051L08	. . . . NUTPLATE			01
30	5565701-27	. . . BRACKET ASSY-RH			01
31	MS24693-S28	. . . SCREW			05
32	MS21052L06	. . . . NUTPLATE			05
33	5565714-16	. . . COVER-RH			01
34	MS24693-S28	. . . SCREW			09
35	MS21048L06	. . . NUTPLATE			09
36	CM2692-16J2S	. . . PLUG BUTTON			01
37	5565702-9	. . BRACKET			06
38	6565136-9	. . PANEL ASSY			01
39	5565704-3	. . . BEARING			01
- 40	MS16624-1037	. . . RING-RETAINER			01
41	6565136-24	. . CHAIN GUARD			01
42	MS35206-225	. . SCREW			04
43	MS21042-06	. . NUT			04
44	6565136-19	. . SUPPORT ASSY			01
45	6565191-30	. . CHANNEL			02
46	6565191-41	. . DZUS STRIP			02
47	6565191-42	. . FILLER			02

- ITEM NOT ILLUSTRATED

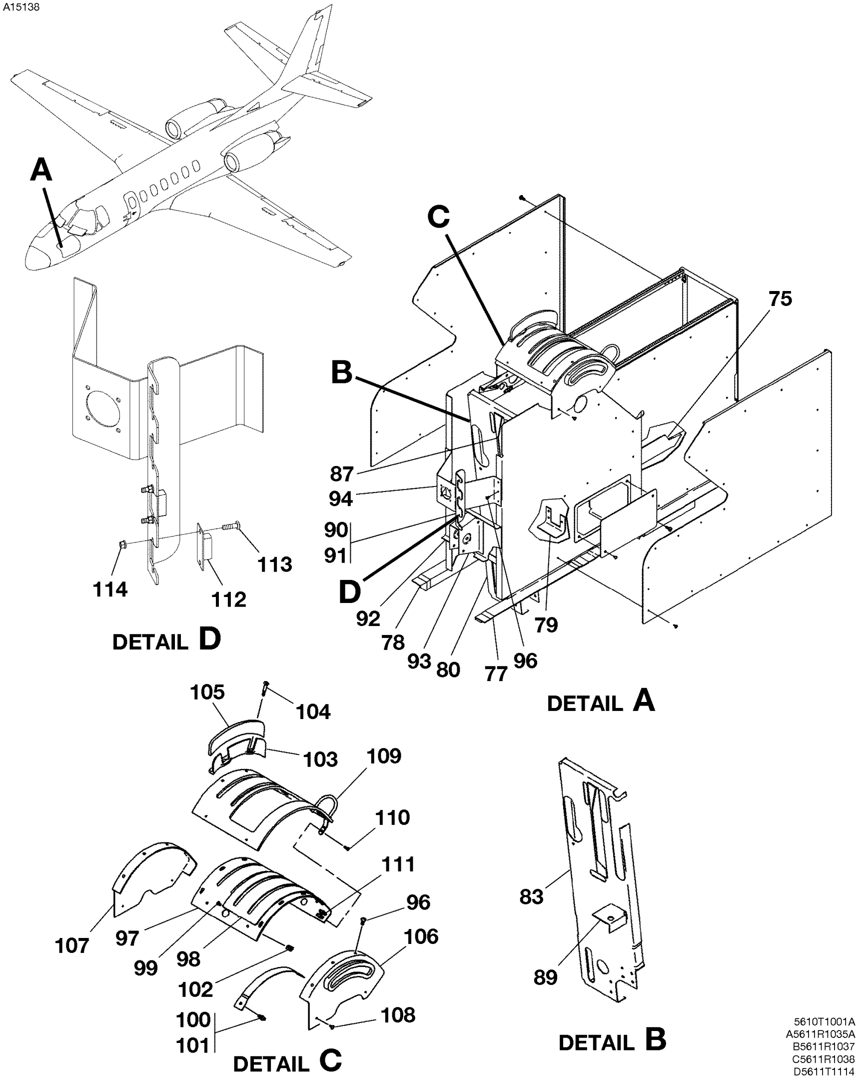

CONTROL PEDESTAL
FIGURE 01B (SHEET 2)

FIG ITEM	PART NUMBER	NOMENCLATURE 1 2 3 4 5 6 7				UNITS PER ASSY
01B						
75	6565136-23	. SUPPORT-LH FSO 6565136-62		0292	0480	NP
- 75A	6565136-62	. SUPPORT-LH		0481	0538	01
- 76	6565136-22	. SUPPORT-RH FSO 6565136-63		0292	0480	NP
- 76A	6565136-63	. SUPPORT-RH		0481	0538	01
77	5565700-5	. BRACKET-LH				01
78	5565700-6	. BRACKET-RH				01
79	6565136-29	. ANGLE				01
80	6565136-30	. ANGLE				01
- 81	5565705-18	. BULKHEAD ASSY-PEDESTAL-FSO 5565705-22		0292	0298	NP
- 82	5565705-20	. BULKHEAD ASSY-PEDESTAL-FSO 5565705-22		0299	0479	NP
- 82A	5565705-22	. BULKHEAD ASSY-PEDESTAL		0480	0538	01
83	5565706-14	. . BULKHEAD ASSY		0299	0479	01
- 83A	5565706-16	. . BULKHEAD ASSY		0480	0538	01
- 84	MS21047L3	. . . NUTPLATE				01
- 85	5565705-11	. . ANGLE		0292	0298	01
- 86	5565705-19	. . ANGLE		0299	0538	01
87	5565711-1	. . BRACKET ASSY-AILERON TRIM SHAFT				01
- 88	S1004-44A	. . . BEARING				01
89	5565705-4	. . BRACKET				01
90	6565136-48	. ANGLE				01
91		. DELETED - NOT USED				RF
92	5565700-12	. BRACKET				01
93	5565709-2	. BRACKET				01
94	6565136-32	. BRACKET				01
- 95	5565703-21	. COVER ASSY				01
		ATTACHING PARTS				
96	MS35206-243	. SCREW				02
		—*—				
97	5565703-20	. . COVER ASSY-THRUST REVERSER				01
98	5565703-8	. . . STRAP ASSY				01
		ATTACHING PARTS				
99	MS24693-BB24	. . . SCREW				02 R
		—*—				
100	MS21069L06	. . . . NUTPLATE				02
101	MS21069L06	. . . NUTPLATE				02
102	MS21075L04N	. . . NUTPLATE				04
103	6565700-34	. GUARD				01
		ATTACHING PARTS				
104	MS24694-S12	. SCREW				02
		—*—				
105	5565700-9	. COVER-GUARD				01
106	5565717-21	. TRIM-LH-FSO 6619135-1				NP
- 106A	6619135-1	. TRIM-LH				01
107	5565717-22	. TRIM-RH				01
		ATTACHING PARTS				
108	S1021Z4-4B	. SCREW				02
		—*—				
109	6565710-47	. GUARD ASSY				01
		ATTACHING PARTS				
110	MS35207-214	. SCREW				02
111	MS21042L06	. NUT				02
		—*—				
112	D9/370000V30	. LOCK TAB-TCAS REFER TO NOTE 1	V28198			02
		ATTACHING PARTS				
113	MS35206-215	. SCREW				02
114	MS21042-04	. NUT				02
		—*—				

NOTE 1—AIRPLANES -0292 THRU -0538 INCORPORATING SB560-34-115.

- ITEM NOT ILLUSTRATED

A15142

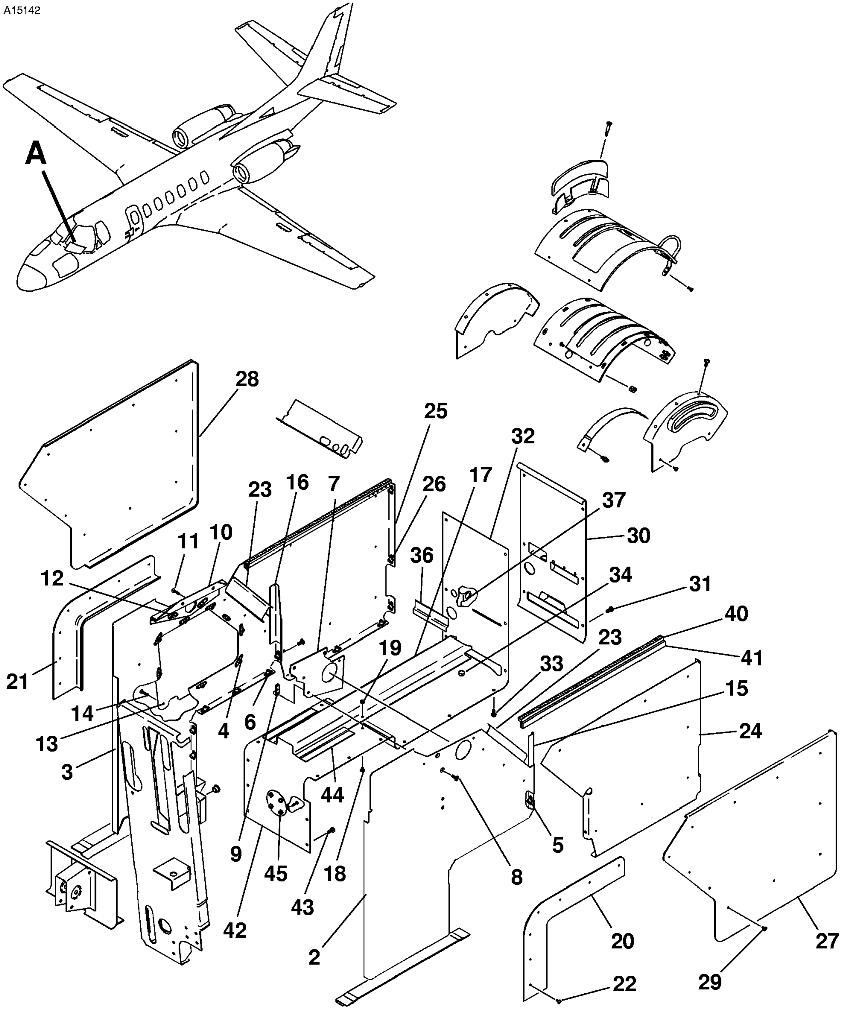

DETAIL A

5610T1001
A5611T1018

CONTROL PEDESTAL USED WITH SPERRY
FIGURE 02 (SHEET 1)

FIG ITEM	PART NUMBER	NOMENCLATURE 1 2 3 4 5 6 7				UNITS PER ASSY
02						
-		CONTROL PEDESTAL USED WITH SPERRY		0001	0259	RF
- 1	6565191-44	. PEDESTAL ASSY		0001	0156	01
- 1A	6565191-50	. PEDESTAL ASSY		0157	0192	01
- 1B	6565191-55	. PEDESTAL ASSY		0193	0259	01
2	6565191-9	. . PANEL ASSY-LH				01
3	6565191-10	. . PANEL ASSY-RH		0001	0192	01
- 3A	6565191-52	. . PANEL ASSY-RH		0193	0259	01
4	MS21048L06	. . . NUTPLATE				09
5	MS21069L08K	. . . NUTPLATE-LH PANEL				06
6	MS21069L08K	. . . NUTPLATE-RH PANEL				07
7	5565701-23	. . . BRACKET ASSY-LH				01
		ATTACHING PARTS				
8	MS24694-S2	. . . SCREW				02
		—*—				
9	MS21051L08	. . . . NUTPLATE				02
10	5565701-18	. . . BRACKET ASSY-RH-RH FSO 5565701-27		0001	0192	NP
- 10A	5565701-27	. . . BRACKET ASSY-RH		0193	0259	01
		ATTACHING PARTS				
11	MS24693-S28	. . . SCREW				05
		—*—				
12	MS21052L06	. . . . NUTPLATE				05
13	5565714-16	. . . COVER-RH				01
		ATTACHING PARTS				
14	MS24693-S28	. . . SCREW				09
		—*—				
15	6565710-37	. . . ANGLE-LH				01
16	6565710-38	. . . ANGLE-RH				01
- 16A	CM2692-16J2S	. . . PLUG BUTTON		0193	0259	01
17	6565191-16	. . CHAIN GUARD				01
		ATTACHING PARTS				
18	MS35206-225	. . SCREW				02
19	MS21042-06	. . NUT				02
		—*—				
20	6565191-21	. . TRIM-EDGE LH				01
21	6565191-22	. . TRIM-EDGE RH				01
		ATTACHING PARTS				
22	S1021Z4-4B	. . SCREW				07
		—*—				
23	6565191-30	. . CHANNEL				02
24	6565191-31	. . PANEL ASSY LH				01
25	6565191-32	. . PANEL ASSY RH				01
26	MS21069L08	. . . NUTPLATE				06
27	6565191-35	. . SIDE TRIM PANEL LH				01
28	6565191-36	. . SIDE TRIM PANEL RH				01
		ATTACHING PARTS				
29	S1021Z4-4B	. . SCREW				11
		—*—				
30	6565191-37	. . FACE TRIM ASSY				01
		ATTACHING PARTS				
31	MS35206-243	. . SCREW				01
		—*—				
32	6565191-39	. . FACE PLATE ASSY				01
		ATTACHING PARTS				
33	MS35206-243	. . SCREW				06
		—*—				
34	5565704-3	. . . BEARING				01
- 35	MS16624-1037	. . . RING-RETAINING				01
36	5565712-10	. . . GUIDE ANGLE				01
37	5565712-7	. . . BRACKET-LIGHT MOUNT				01
- 38	101-7130-0937- 201	. . . LIGHT	V72619			01
- 39	MS25237-328	. . . LAMP				01
40	6565191-41	. . DZUS STRIP				02
41	6565191-42	. . FILLER				02
42	6565710-9	. . FACE PLATE ASSY				01
		ATTACHING PARTS				
43	MS35206-243	. . SCREW				10
		—*—				
44	5565712-11	. . . CLIP				02
45	5565704-4	. . . COVER PLATE				01

- ITEM NOT ILLUSTRATED

A15145

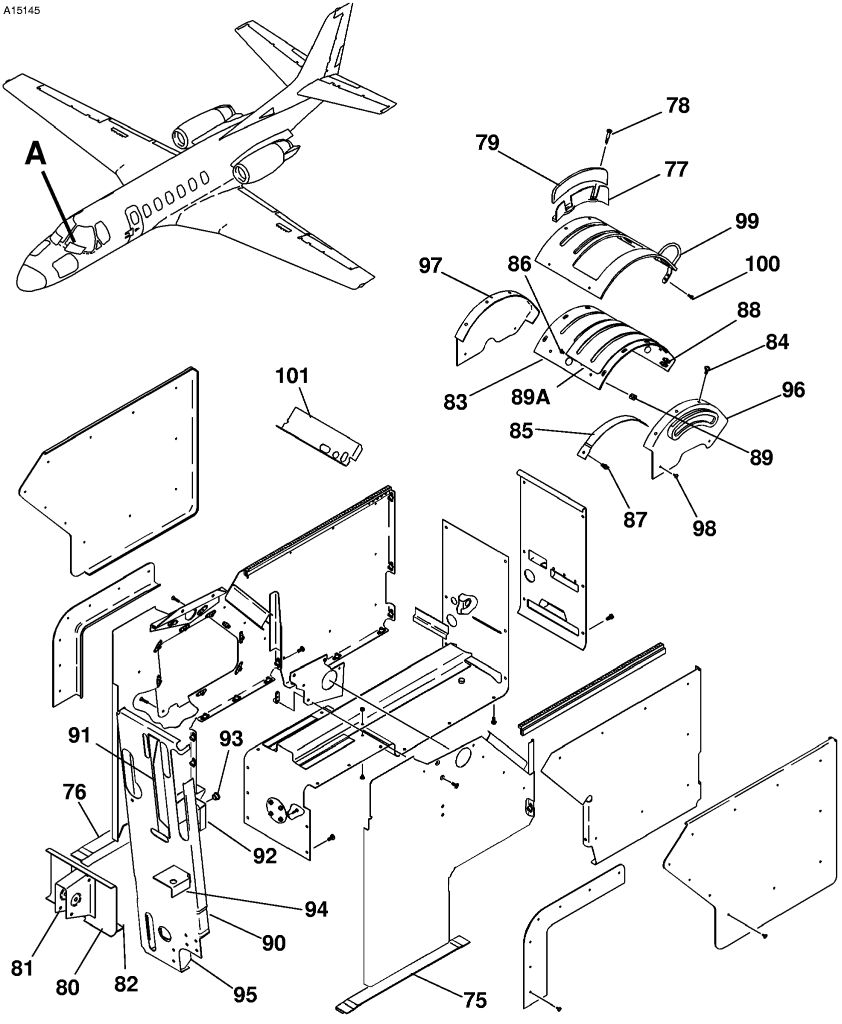

DETAIL A

5610T1001
A5611T1018

CONTROL PEDESTAL USED WITH SPERRY
FIGURE 02 (SHEET 2)

FIG ITEM	PART NUMBER	NOMENCLATURE 1 2 3 4 5 6 7	UNITS PER ASSY
02			
75	5565700-5	. BRACKET-LH	01
76	5565700-6	. BRACKET-RH	01
77	6565700-8	. GUARD	01
		ATTACHING PARTS	
78	MS24694-S12	. SCREW	02
		—*—	
79	5565700-9	. COVER GUARD	01
80	5565700-12	. BRACKET	01
81	5565709-2	. BRACKET	01
82	5565700-10	. ANGLE TRIM	01
83	5565703-20	. COVER ASSY	01
		ATTACHING PARTS	
84	MS35206-243	. SCREW	06
		—*—	
85	5565703-8	. . STRAP ASSY	01
		ATTACHING PARTS	
86	MS24693-BB24	. . SCREW	02 R
		—*—	
87	MS21069L06	. . . NUTPLATE	02
88	MS21069L06	. . NUTPLATE	02
89	MS21075L04N	. . NUTPLATE	04
89A	5565703-11	. COVER-SLOT FSO 5565703-19	NP
- 89B	5565703-19	. COVER-SLOT	01
- 89C	5565703-23	. SLOT COVER-DUTCH CERTIFIED AIRPLANES	01
90	5565705-15	. BULKHEAD ASSY	01
91	5565705-11	. . ANGLE	01
92	5565711-1	. . BRACKET ASSY-AILERON TRIM SHAFT	01
93	S1004-44A	. . . BEARING	01
94	5565705-4	. . BRACKET	01
95	5565705-17	. . DOUBLER	01
96	5565717-21	. TRIM-LH FSO 6619135-1	NP
- 96A	6619135-1	. TRIM-LH	01
97	5565717-22	. TRIM-RH	01
		ATTACHING PARTS	
98	S1021Z4-4B	. SCREW	02
		—*—	
99	6565710-47	. GUARD ASSY	01
100	MS35207-214	. SCREW	02
101		. PLATE-BLANKING-REFER TO NOTE 1	RF

NOTE 1—FOR BLANKING PLATES USED WITH AVIONIC COMBINATIONS REFER TO CHAPTER 53 OF THE CESSNA MAINTENANCE MANUAL.

- ITEM NOT ILLUSTRATED

A15122

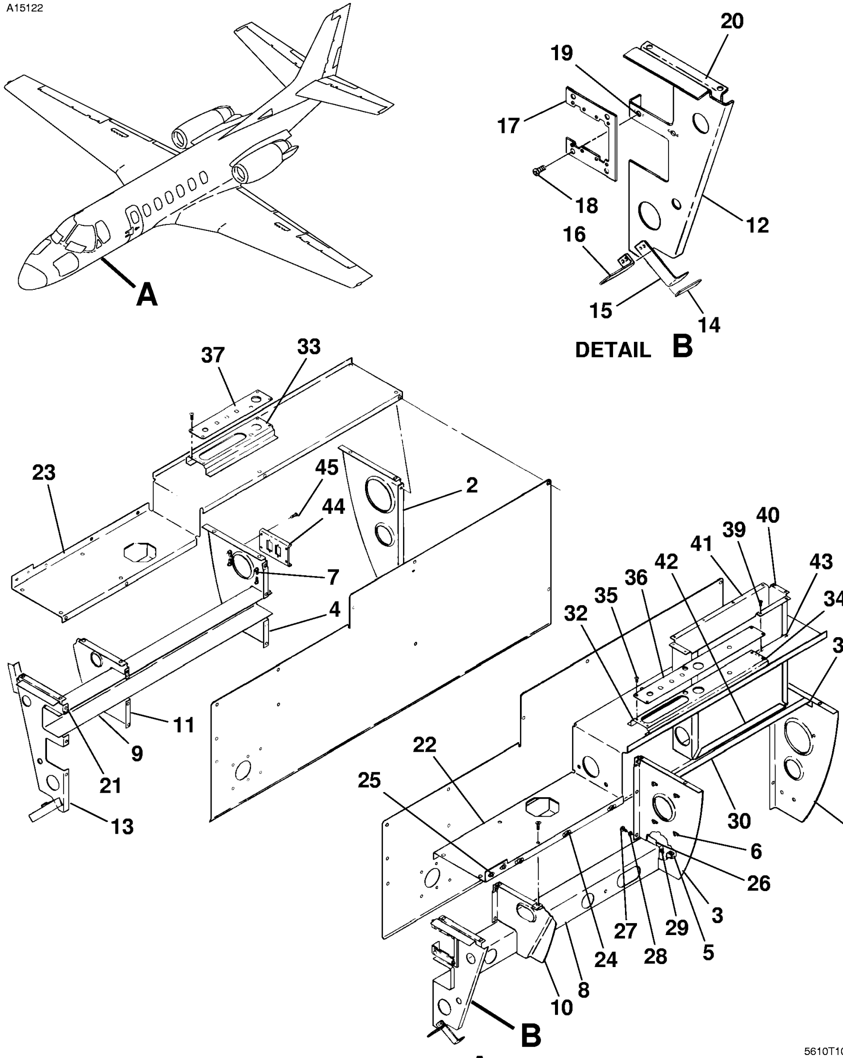

5610T1001
A5511R4014A
B5511R1013

SIDE CONSOLE STRUCTURE
FIGURE 01 (SHEET 1)

FIG ITEM	PART NUMBER	NOMENCLATURE 1 2 3 4 5 6 7			UNITS PER ASSY
01					
-		SIDE CONSOLE STRUCTURE	0001	0538	RF
1	5514806-120	. WEB-LH FS151.00			01
2	5514806-149	. WEB-RH FS151.00	0001	0400	01
- 2A	5514806-406	. WEB-RH FS151.00	0401	0538	01
3	5514806-135	. WEB ASSY-LH FS134.00	0001	0150	01
- 3A	5514806-170	. WEB ASSY-LH FS134.00	0151	0538	01
4	5514806-122	. WEB ASSY-RH FS134.00			01
5	AN256-10	. . NUTPLATE			01
6	MS21047L08	. . NUTPLATE-LH			04
7	MS21052L06	. . NUTPLATE-RH			04
8	5514806-137	. CHANNEL-LH	0001	0150	01
- 8A	5514806-172	. CHANNEL-LH	0151	0538	01
9	5514806-138	. CHANNEL-RH			01
10	5514806-128	. WEB-LH FS117.00	0001	0150	01
- 10A	5514806-173	. WEB-LH FS117.00	0151	0259	01
- 10B	5514806-188	. WEB-LH FS117.00	0260	0538	01
11	5514806-6	. WEB-RH FS117.00			01
12	5514806-85	. WEB-LH FS108.64-FSO 5514806-407	0001	0437	01
- 12A	5514806-407	. WEB-LH FS108.64	0438	0538	01
13	5514806-86	. WEB-RH FS108.64			01
14	5514806-87	. FILLER-LH AND RH			02
15	5514806-71	. ANGLE-LH AND RH			02
16	5514806-84	. ANGLE-LH AND RH			02
17	5514806-83	. ADAPTER-LH			01
18	MS35206-213	. SCREW			04
19	MS21069L04	. NUTPLATE			04
20	5514806-15	. ANGLE-LH FS108.64			01
21	5514806-65	. ANGLE-RH FS108.64			01
22	5514806-145	. COVER-LH	0001	0326	01
- 22A	5514806-401	. COVER-LH	0327	0538	01
23	5514806-108	. COVER-RH	0001	0250	01
- 23A	5514806-176	. COVER ASSY-RH	0251	0326	01
- 23B	5514806-400	. COVER-RH	0327	0538	01
24	MS21075L06N	. NUTPLATE			03 R
25	MS21069L08K	. NUTPLATE			02
26	5514806-35	. CLIP ASSY-LH AND RH			06
27	MS35206-230	. SCREW			12
28	NAS1149DN616K	. WASHER			12
29	MS21069L06	. . NUTPLATE			04
30	5514806-146	. ANGLE-LH			01
31	5514806-40	. CLIP-LH	0001	0318	02
- 31A	5514806-40	. CLIP-LH	0319	0538	01
32	5514806-143	. SUPPORT ASSY-LH-FSO 5514806-419	0001	0517	NP
- 32A	5514806-419	. SUPPORT ASSY-LH	0518	0538	01
33	5514806-106	. SUPPORT ASSY-RH-FSO 5514806-410	0001	0517	NP
- 33A	5514806-410	. SUPPORT ASSY-RH	0518	0538	01
34	MS21072L06	. . NUTPLATE			04
35	MS35206-228	. SCREW			04
36	5514806-142	. PLATE-LH	0001	0259	01
- 36A	5514806-195	. PLATE-LH	0260	0538	01
37	5514806-90	. PLATE-RH	0001	0259	01
- 37A	5514806-196	. PLATE-RH	0260	0538	01
- 38	5514806-18	. MAP COMPARTMENT ASSY-LH FSO 5514806-189	0001	0262	NP
- 38A	5514806-189	. MAP COMPARTMENT ASSY-LH	0263	0538	01
- 38B	5514806-200	. MAP COMPARTMENT ASSY-LH CHARCOAL REFER TO NOTE 1			01
- 38C	5514806-201	. MAP COMPARTMENT ASSY-LH IVORY REFER TO NOTE 1			01
		ATTACHING PARTS			
39	MS51958-30	. SCREW			10
		—*—			
40	5514806-19	. . FRAME	0001	0262	01
- 40A	5514806-192	. . FRAME	0263	0538	01
41	5514806-20	. . PANEL-INBOARD	0001	0262	01
- 41A	5514806-190	. . PANEL-INBOARD	0263	0538	01
42	5514806-42	. . PANEL-OUTBOARD	0001	0262	01
- 42A	5514806-191	. . PANEL-OUTBOARD	0263	0538	01
43	MS21069L06	. NUTPLATE			10 R
44	5514806-112	. BRACKET-CONNECTOR RH			01
45	MS35206-229	. SCREW			04

NOTE 1—AIRPLANES -0001 THRU -0248 INCORPORATING SB560-53-16.

- ITEM NOT ILLUSTRATED

A16337

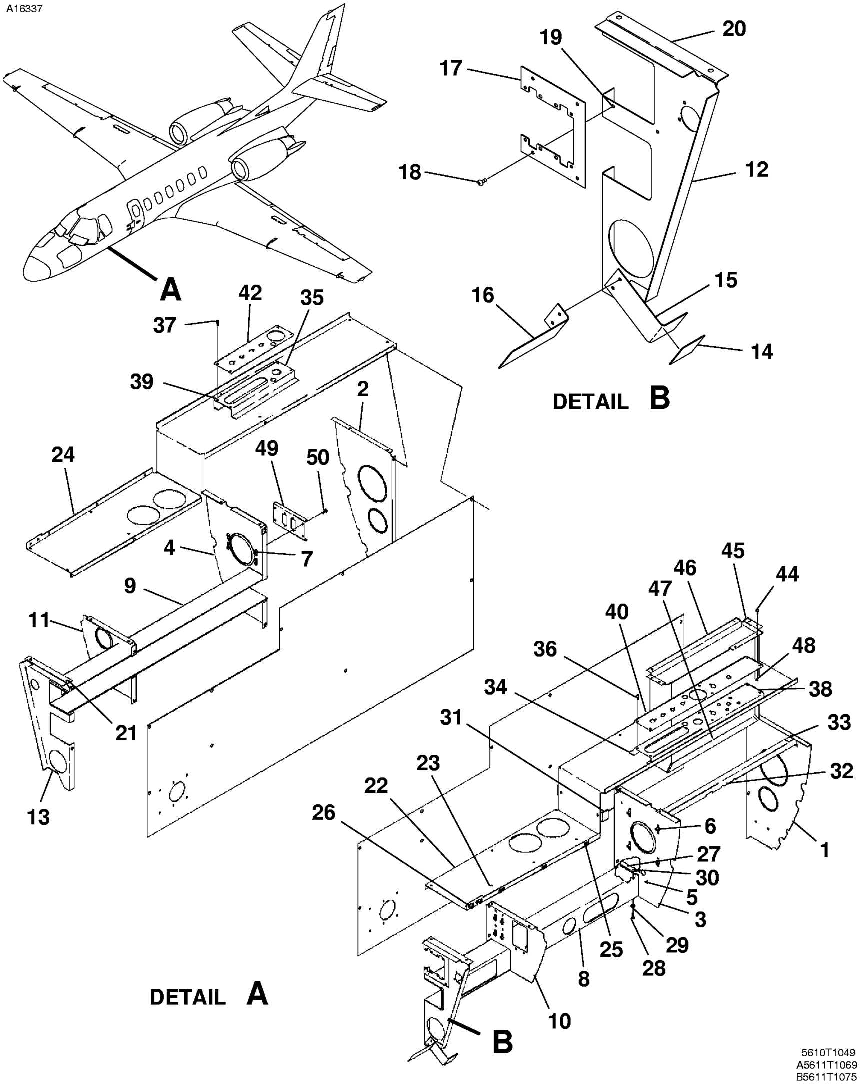

SIDE CONSOLE STRUCTURE
FIGURE 02 (SHEET 1)

FIG ITEM	PART NUMBER	NOMENCLATURE 1 2 3 4 5 6 7			UNITS PER ASSY
02					
-		SIDE CONSOLE STRUCTURE	0539	& ON	RF
1	5514806-120	. WEB-LH FS151.00			01
2	5514806-406	. WEB-RH FS151.00			01
3	5514806-170	. WEB ASSY-LH FS134.00			01
4	5514806-122	. WEB ASSY-RH FS134.00			01
5	AN256-10	. . NUTPLATE			01
6	MS21047L08	. . NUTPLATE-LH			04
7	MS21052L06	. . NUTPLATE-RH			04
- 7A	6318104-2	. GROUND STUD-LH CGS905			01
- 7B	6318104-2	. GROUND STUD-RH CGS904			01
8	5514806-172	. CHANNEL-LH			01
9	5514806-138	. CHANNEL-RH			01
10	5514806-188	. WEB-LH FS117.00			01
11	5514806-6	. WEB-RH FS117.00			01
12	5514806-407	. WEB-LH FS108.64			01
13	5514806-86	. WEB-RH FS108.64			01
14	5514806-87	. FILLER			02
15	5514806-71	. ANGLE			02
16	5514806-84	. ANGLE			02
17	5514806-83	. ADAPTER-LH J1A			01
18	MS35206-213	. SCREW			04
19	MS21069L04	. NUTPLATE			04
20	5514806-15	. ANGLE-LH FS108.64			01
21	5514806-65	. ANGLE-RH FS108.64			01
22	5514806-429	. COVER ASSY-LH	0539	0641	01
- 22A	5514806-442	. COVER ASSY LH	0642	& ON	01
23	NAS1474A06	. . NUTPLATE			03
24	5514806-400	. COVER-RH			01
25	MS21075L06N	. NUTPLATE			06
26	MS21069L08K	. NUTPLATE			02
27	5514806-35	. CLIP ASSY			06
		ATTACHING PARTS			
28	MS35206-230	. SCREW			02
29	NAS1149DN616K	. WASHER			02
		—*—			
30	MS21069L06	. . NUTPLATE			04
31	5514806-63	. CLIP			02
32	5514806-425	. ANGLE-LH			01
33	5514806-40	. CLIP-LH			01
34	5514806-433	. SUPPORT ASSY-LH			01
35	5514806-410	. SUPPORT ASSY-RH			01
		ATTACHING PARTS			
36	MS35206-228	. SCREW-LH			06
37	MS35206-228	. SCREW-RH			04
		—*—			
38	MS21072L06	. . NUTPLATE-LH			06
39	MS21072L06	. . NUTPLATE-RH			04
40	5514806-427	. PLATE-LH			01
- 41	5514806-144	. MOUNT-LH			01
42	5514806-196	. PLATE-RH			01
- 43	5514806-189	. MAP COMPARTMENT ASSY-LH			01
		ATTACHING PARTS			
44	MS51958-30	. SCREW			10
		—*—			
45	5514806-192	. . FRAME			01
46	5514806-190	. . PANEL-INBOARD			01
47	5514806-191	. . PANEL-OUTBOARD			01
48	MS21069L06	. NUTPLATE			10 R
49	5514806-112	. BRACKET-CONNECTOR RH			01
50	MS35206-230	. SCREW			04

- ITEM NOT ILLUSTRATED

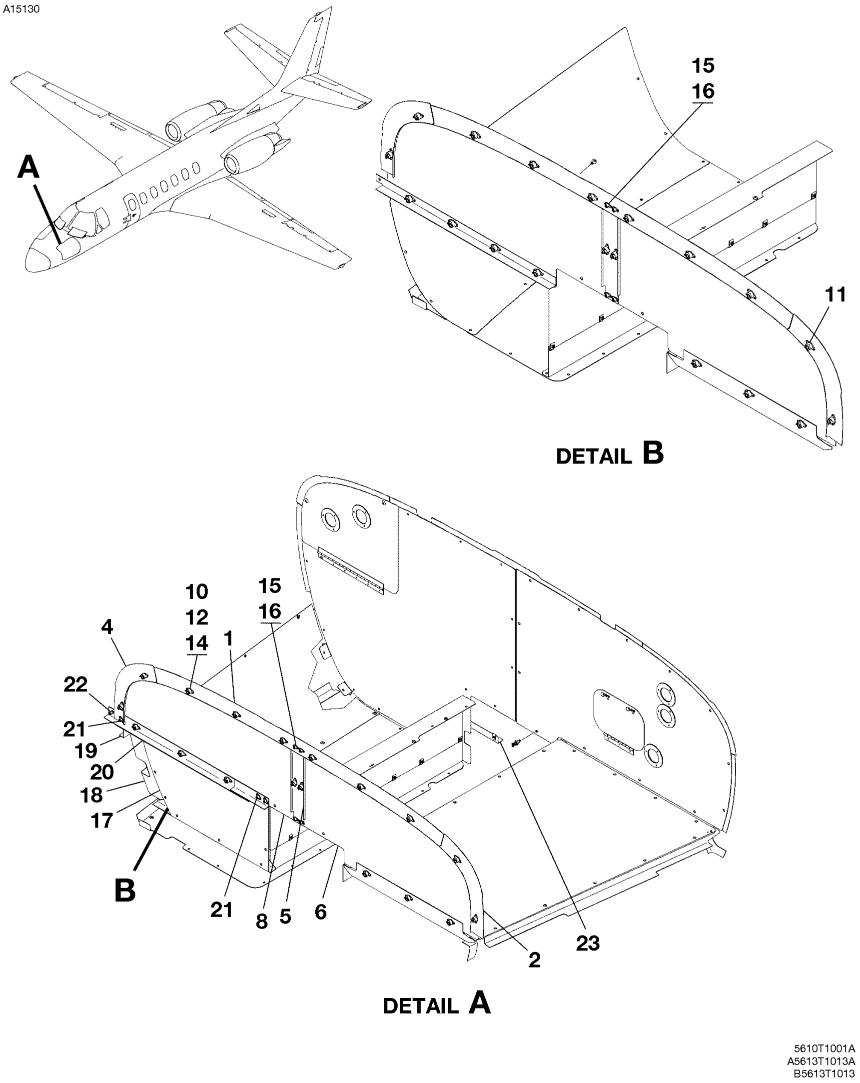

BAGGAGE COMPARTMENT DIVIDERS - NOSE
FIGURE 03 (SHEET 1)

FIG ITEM	PART NUMBER	NOMENCLATURE 1 2 3 4 5 6 7			UNITS PER ASSY
03					
-		BAGGAGE COMPARTMENT DIVIDERS - NOSE	0260	0750	RF
1	6513006-17	. SUPPORT CTR-UPPER FS59.00 REFER TO NOTE 4 AND NOTE 7			01 R
2	6513006-5	. SUPPORT SIDE LH-FS59.00 REFER TO NOTE 1, NOTE 4 AND NOTE 7 . .			01 R
- 3	6513006-4	. SUPPORT SIDE RH-FS59.00 REFER TO NOTE 2 AND NOTE 5	0260	0400	01
4	9656057-22	. SUPPORT ASSY RH-FS59.00 REFER TO NOTE 3 AND NOTE 6	0401	0750	01
5	6513005-21	. PLATE-FS59.00 REFER TO NOTE 1, NOTE 4 AND NOTE 7			01 R
6	6513006-24	. BAGGAGE WALL LH-FORWARD FS59.00 REFER TO NOTE 1, NOTE 4 AND NOTE 7			01 R
- 7	6513006-20	. BAGGAGE WALL RH-FORWARD FS59.00	0260	0400	01
- 7A	9656060-11	. BAGGAGE WALL RH-FORWARD FS59.00 REFER TO NOTE 1, NOTE 4 AND NOTE 7			01 R
8	9656057-3	. BAGGAGE WALL-RH-FORWARD FS59.00 REFER TO NOTE 3	0401	0750	01
		ATTACHING PARTS			
- 9	S3275-5S	. STUD-REFER TO NOTE 8	0260	0400	AR R
10	S3275-6S	. STUD-REFER TO NOTE 3, NOTE 6 AND NOTE 7	0401	0750	AR R
11	S3275E202	. RECEPTACLE-REFER TO NOTE 2 AND NOTE 5	0260	0400	21
12	S3275E202	. RECEPTACLE-REFER TO NOTE 3 AND NOTE 6	0401	0750	33
- 13	S3275-300	. RETAINER RING-WASHER REFER TO NOTE 2 AND NOTE 5	0260	0400	AR R
14	S3275-300	. RETAINER RING-WASHER REFER TO NOTE 3 AND NOTE 6	0401	0750	AR R
15	MS27039-0805	. SCREW-REFER TO NOTE 1 AND NOTE 7			04 R
16	MT2S832K1BC	. ANCHOR NUT-REFER TO NOTE 1 AND NOTE 7			04 R
		—*—			
17	9656057-7	. CLOSURE ASSY RH-FORWARD REFER TO NOTE 3	0401	0750	01
18	9656057-21	. FRAME ASSY RH-FS62.00 REFER TO NOTE 3	0401	0750	01
19	9656057-8	. SUPPORT-RH REFER TO NOTE 3	0401	0750	01
20	9656057-15	. SUPPORT ASSY-REFER TO NOTE 3	0401	0750	01
		ATTACHING PARTS			
21	MS24694-S47	. SCREW-REFER TO NOTE 3	0401	0750	04
22	MS35207-262	. SCREW-REFER TO NOTE 3	0401	0750	04
		—*—			
23	6513005-15	. ANGLE LOWER-FS89.00			02

NOTE 1—AIRPLANES -0260 THRU -0538 INCORPORATING SB560-34-107.

NOTE 2—AIRPLANES -0260 THRU -0400 AND AIRPLANES -0260 THRU -0538 INCORPORATING SB560-34-107.

NOTE 3—AIRPLANES -0401 THRU -0750 AND AIRPLANES -0260 THRU -0538 INCORPORATING SB560-34-107.

NOTE 4—AIRPLANES -0260 THRU -0538 INCORPORATING SB560-34-108.

NOTE 5—AIRPLANES -0260 THRU -0400 AND AIRPLANES -0260 THRU -0538 INCORPORATING SB560-34-108 AND SB560-34-114. R

NOTE 6—AIRPLANES -0401 THRU -0750 AND AIRPLANES -0260 THRU -0538 INCORPORATING SB560-34-108 AND SB560-34-114. R

NOTE 7—AIRPLANES -0260 THRU -0538 INCORPORATING SB560-34-114. R

NOTE 8—AIRPLANES -0260 THRU -0400 AND AIRPLANES -0260 THRU -0538 INCORPORATING SB560-34-114. R

- ITEM NOT ILLUSTRATED

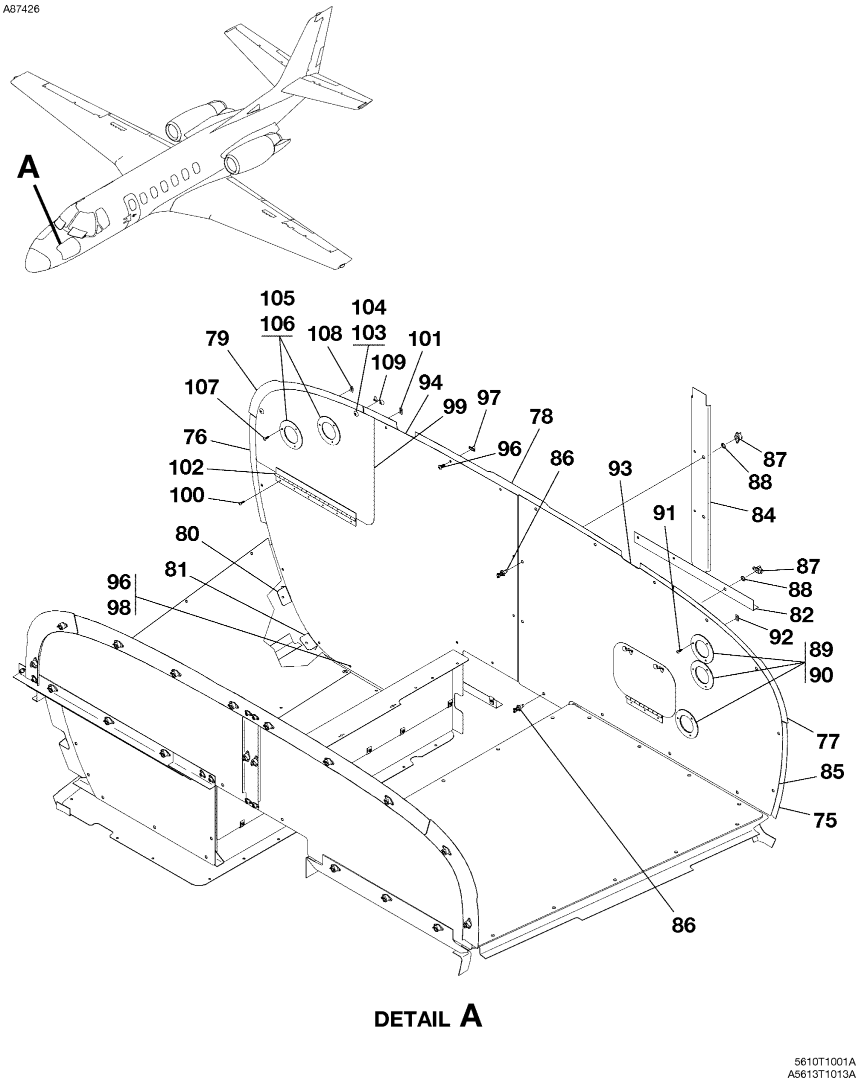

BAGGAGE COMPARTMENT DIVIDERS - NOSE
FIGURE 03 (SHEET 2)

FIG ITEM	PART NUMBER	NOMENCLATURE 1 2 3 4 5 6 7				UNITS PER ASSY	
03							
75	6513006-12	. SUPPORT SIDE LH-LOWER FS89.00 REFER TO NOTE 1, NOTE 2 AND NOTE 3				01	R
76	6513005-49	. SUPPORT RH-REFER TO NOTE 1, NOTE 2 AND NOTE 3				01	R
77	6513006-18	. SUPPORT UPRER LH-FS89.00 REFER TO NOTE 1, NOTE 2 AND NOTE 3				01	R
78	6313080-21	. CENTER SUPPORT-UPPER FS89.00 REFER TO NOTE 1, NOTE 2 AND NOTE 3				01	R
79	6313080-22	. SUPPORT UPPER RH-FS89.00 REFER TO NOTE 1, NOTE 2 AND NOTE 3				01	R
80	6513005-48	. SUPPORT CLIP-FS89.00 REFER TO NOTE 1, NOTE 2 AND NOTE 3				02	R
81	6513005-17	. SUPPORT CLIP-FS89.00 REFER TO NOTE 1, NOTE 2 AND NOTE 3				02	R
82	6513006-31	. ANGLE-FS89.00		0610	0750	01	
- 83	6513006-13	. ANGLE-FS89.00 REFER TO NOTE 1, NOTE 2 AND NOTE 3				01	R
84	6513006-14	. STIFFENER-FS89.00 REFER TO NOTE 1, NOTE 2 AND NOTE 3				01	R
85	6513006-22	. BAGGAGE WALL ASSY LH-FS89.00				01	
		ATTACHING PARTS					
86	S3275-5S	. STUD				12	
87	S3275E202	. RECEPTACLE-REFER TO NOTE 1 AND NOTE 2				12	
88	S3275-300	. RETAINER RING-WASHER REFER TO NOTE 1 AND NOTE 2				12	
		—*—					
89	5513085-35	. . INSPECTION LENS-REFER TO NOTE 1 AND NOTE 2				03	
90	5513085-62	. . TRIM RING-REFER TO NOTE 1 AND NOTE 2				03	
		ATTACHING PARTS					
91	S1021A4-8C	. . SCREW-REFER TO NOTE 1 AND NOTE 2				03	
92	S4215-1	. . NUT				03	
		—*—					
93	6513006-23	. . BAGGAGE WALL LH-REFER TO NOTE 1 AND NOTE 2				01	
94	6513006-32	. BAGGAGE WALL RH		0610	0750	01	
- 95	6513006-6	. BAGGAGE WALL RH-REFER TO NOTE 1				01	
		ATTACHING PARTS					
96	AN525-832R7	. SCREW-REFER TO NOTE 1 AND NOTE 3				AR	R
97	MS21069L08K	. NUTPLATE-REFER TO NOTE 1 AND NOTE 3				08	R
98	S1477-08	. . NUT-CLIP REFER TO NOTE 1				05	
		—*—					
99	6513006-9	. ACCESS PANEL ASSY-REFER TO NOTE 1, NOTE 2 AND NOTE 3				01	R
		ATTACHING PARTS					
100	S1021A4-8C	. SCREW-REFER TO NOTE 1 AND NOTE 3				06	R
101	S4215-1	. NUT-REFER TO NOTE 3				06	R
		—*—					
102	6513006-11	. . HINGE ASSY-ACCESS PANEL				01	
103	APRJ4-45	. . STUD	V72794			02	
104	SR4SS	. . SNAP RING	V72794			02	
105	5513085-35	. . INSPECTION LENS-REFER TO NOTE 1 AND NOTE 2				02	
106	5513085-62	. . TRIM RING-REFER TO NOTE 1 AND NOTE 2				02	
		ATTACHING PARTS					
107	S1021A4-8C	. . SCREW-REFER TO NOTE 1				03	
108	S4215-1	. . NUT				03	
		—*—					
109	CM2822-2	. SPRING-REFER TO NOTE 1, NOTE 2 AND NOTE 3				02	R

NOTE 1—AIRPLANES -0260 THRU -0538 INCORPORATING SB560-34-107.

NOTE 2—AIRPLANES -0260 THRU -0538 INCORPORATING SB560-34-108.

NOTE 3—AIRPLANES -0260 THRU -0538 INCORPORATING SB560-34-114. R

- ITEM NOT ILLUSTRATED

A15132

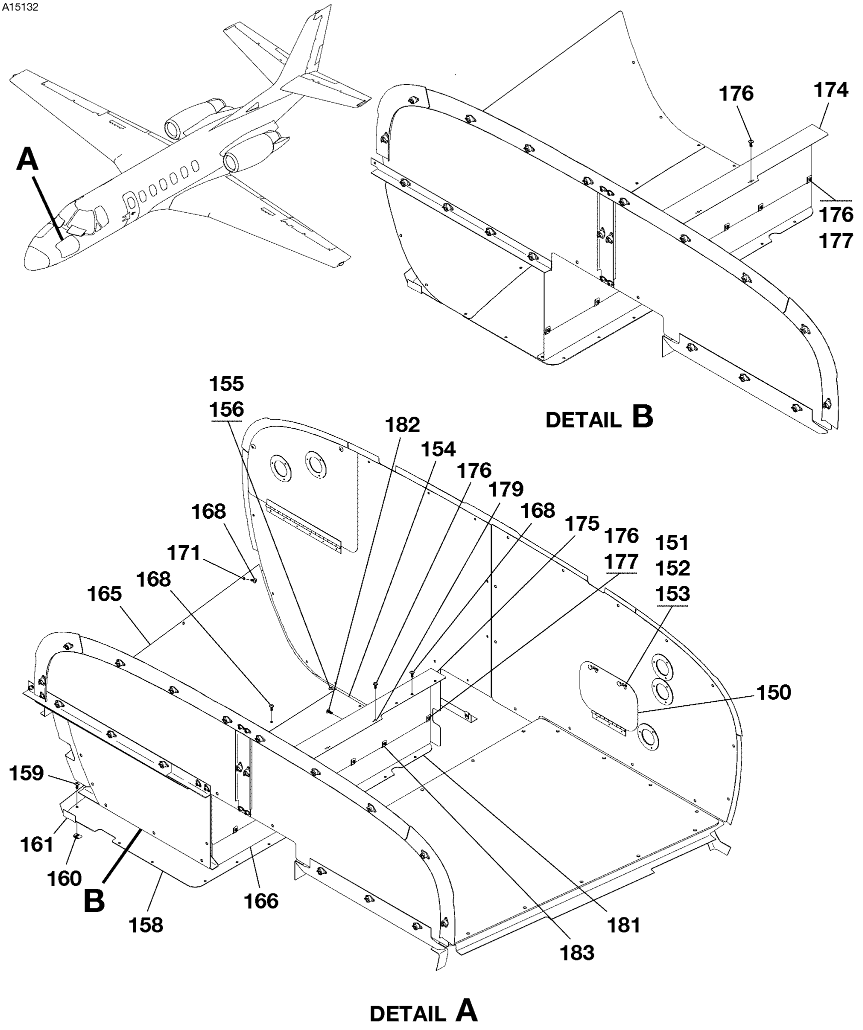

5610T1001A
A5613T1013A
B5613T1013

BAGGAGE COMPARTMENT DIVIDERS - NOSE
FIGURE 03 (SHEET 3)

FIG ITEM	PART NUMBER	NOMENCLATURE 1 2 3 4 5 6 7				UNITS PER ASSY	
03							
150	6513006-25	. ACCESS PANEL ASSY-REFER TO NOTE 2, NOTE 5 AND NOTE 6				01	R
151	APRJ4-45	. . STUD	V72794			02	
152	SR4SS	. . SNAP RING	V72794			02	
- 152A	6513006-27	. . HINGE ASSY				01	
- 152B	S1021A4-8C	. . SCREW-REFER TO NOTE 6				03	R
- 152C	NAS446-1-3	. . NUT-REFER TO NOTE 6				03	R
153	S4-225SS	. SPRING-REFER TO NOTE 6				04	R
154	6313081-10	. FLOOR PANEL-AFT				01	
		ATTACHING PARTS					
155	AN525-832R7	. SCREW				16	
156	S1477-08	. NUT				16	
		—*—					
- 157	6313081-9	. FLOOR PANEL-CENTER		0260	0400	01	
- 157A	9690522-3	. FLOOR PANEL-CENTER REFER TO NOTE 1				01	
158	6313081-54	. FLOOR PANEL ASSY-RH-PANEL CENTER		0401	0750	01	
		ATTACHING PARTS					
159	AN525-832R7	. SCREW				16	
160	S1477-08	. NUT-CLIP				16	
		—*—					
161	6313081-18	. CLIP RH				01	
- 162	6313081-14	. ANGLE CTR RH-FSO 6313081-58		0260	0750	NP	
- 163	6313081-16	. ANGLE AFT RH-FSO 6313081-60		0260	0750	NP	
- 164	6513005-30	. CLOSURE PANEL SIDE-RH		0260	0400	01	
165	9656057-4	. CLOSURE PANEL-RH OUTBOARD-REFER TO NOTE 4		0401	0750	01	
166	9656057-5	. CLOSURE PANEL-RH FWD-REFER TO NOTE 4		0401	0750	01	
		ATTACHING PARTS					
- 167	AN525-832R7	. SCREW-REFER TO NOTE 3		0260	0400	10	
168	AN525-832R7	. SCREW-REFER TO NOTE 4		0401	0750	18	
- 169	AN3-3A	. BOLT				01	
- 170	S1477-08	. NUT-CLIP		0260	0400	10	
171	S1477-08	. NUT-CLIP		0401	0750	07	
- 172	MS21069L3	. NUTPLATE				01	
		—*—					
- 173	6513005-34	. SUPPORT CLIP RH		0260	0400	01	
174	6313081-30	. CLOSURE PANEL AFT RH		0260	0400	01	
175	9656057-10	. CLOSURE PANEL AFT RH-REFER TO NOTE 4		0401	0750	01	
- 175A	6590209-26	. AFT CLOSURE PANEL MOD-USED WITH GRAVEL RUNWAY		0572	0750	01	
		ATTACHING PARTS					
176	AN525-832R7	. SCREW-REFER TO NOTE 2				AR	
177	S1477-08	. NUT-CLIP REFER TO NOTE 2				AR	
		—*—					
- 178	MS21069L08K	. NUTPLATE-WHEELWELL ATTACH REFER TO NOTE 3		0260	0400	05	
179	MS21069L08K	. NUTPLATE-CLOSURE PANEL ATTACH REFER TO NOTE 4		0401	0750	03	
- 180	MS21069-08	. NUTPLATE-FLOORBOARD ATTACH REFER TO NOTE 4		0401	0750	05	
181	6313081-32	. ACCESS COVER RH-AFT REFER TO NOTE 2				01	
- 181A	6590209-27	. ACCESS PANEL MOD-COVER AFT USED WITH GRAVEL RUNWAY		0572	0750	01	
		ATTACHING PARTS					
182	AN525-832R7	. SCREW-REFER TO NOTE 2				06	
183	S1477-08	. NUT-REFER TO NOTE 2				06	
		—*—					
- 184	6313081-34	. ACCESS COVER FWD RH		0260	0400	01	
		ATTACHING PARTS					
- 185	AN525-832R7	. SCREW		0260	0400	04	
- 186	S1477-08	. NUT		0260	0400	04	
		—*—					

NOTE 1—AIRPLANES -0001 THRU -0259 INCORPORATING SB560-34-113.

NOTE 2—AIRPLANES -0260 THRU -0538 INCORPORATING SB560-34-107.

NOTE 3—AIRPLANES -0260 THRU -0400 AND AIRPLANES -0260 THRU -0538 INCORPORATING SB560-34-107.

NOTE 4—AIRPLANES -0401 THRU -0750 AND AIRPLANES -0260 THRU -0538 INCORPORATING SB560-34-107.

NOTE 5—AIRPLANES -0260 THRU -0538 INCORPORATING SB560-34-108.

NOTE 6—AIRPLANES -0260 THRU -0538 INCORPORATING SB560-34-114. R

- ITEM NOT ILLUSTRATED

A87427

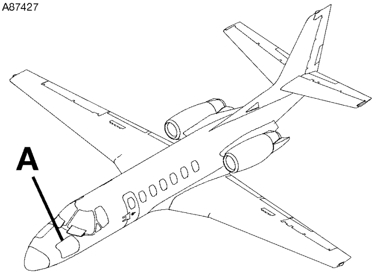

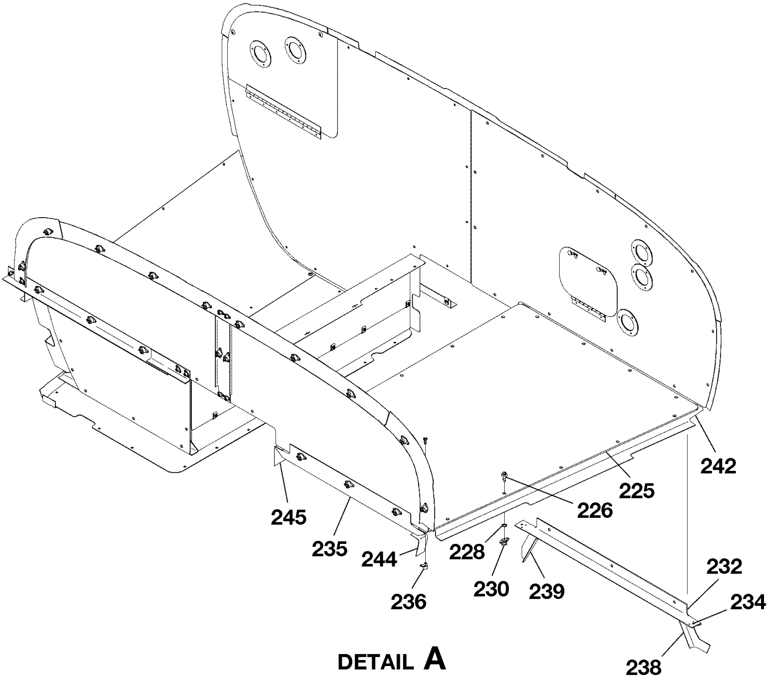

DETAIL A

5610T1001A
A5613T1013A

BAGGAGE COMPARTMENT DIVIDERS - NOSE
FIGURE 03 (SHEET 4)

FIG ITEM	PART NUMBER	NOMENCLATURE 1 2 3 4 5 6 7		UNITS PER ASSY	
03					
225	9656056-2	. SHELF-AVIONICS COVER REFER TO NOTE 1, NOTE 3 AND NOTE 4		01	R
		ATTACHING PARTS			
226	S3275-6S	. STUD ASSY-REFER TO NOTE 1 AND NOTE 3		17	
- 227	2600-6	. STUD ASSY-ALT FOR S3275-6S REFER TO NOTE 2 AND NOTE 4	V71286	15	R
228	S3275-300	. RETAINER RING-WASHER-REFER TO NOTE 1, NOTE 3 AND NOTE 4		17	R
- 229	2600-LW	. RETAINER RING-WASHER-ALT FOR S3275-300 REFER TO NOTE 2 AND NOTE 4.	V71286	15	R
230	S3275E202	. RECEPTACLE-REFER TO NOTE 3		17	
- 231	212-12	. RECEPTACLE-ALT FOR S3275E202 REFER TO NOTE 2 AND NOTE 4	V71286	15	R
		—*—			
232	9656056-5	. SHELF SUPPORT ASSY-AFT		01	
- 233	9656056-8	. TEE-REFER TO NOTE 1		01	
234	MS21056L08	. NUTPLATE-REFER TO NOTE 2 AND NOTE 4		02	R
235	9656056-4	. SHELF SUPPORT ASSY-FOWARD.		01	
236	9656060-7	. TEE-REFER TO NOTE 2, NOTE 3 AND NOTE 4		01	R
- 237	MS21056L08	. . NUTPLATE		02	
238	9656056-9	. BRACKET-REFER TO NOTE 1		01	
239	9656056-10	. BRACKET		01	
- 240	MS24694-S5	. SCREW-REFER TO NOTE 3 AND NOTE 4		04	R
- 241	MS27039-0807	. SCREW-REFER TO NOTE 2, NOTE 3 AND NOTE 4		02	R
242	9656056-6	. ZEE-REFER TO NOTE 2		01	
- 243	9656060-5	. ZEE-REFER TO NOTE 1, NOTE 2, NOTE 2 AND NOTE 4.		01	R
244	9656056-11	. CLIP-REFER TO NOTE 1, NOTE 2 AND NOTE 4		01	R
245	9656056-3	. SUPPORT ANGLE		01	
- 246	9656060-2	. SUPPORT ANGLE-REFER TO NOTE 1, NOTE 2, NOTE 3 AND NOTE 4 . . .		01	R
- 247	9656060-9	. BRACKET-REFER TO NOTE 2, NOTE 3 AND NOTE 4		01	R
- 248	MS21056L08	. . NUTPLATE		02	
- 249	MS27039-0807	. SCREW-REFER TO NOTE 2 AND NOTE 3		01	
- 250	9656060-8	. BRACKET-REFER TO NOTE 2, NOTE 3 AND NOTE 4		01	R
- 251	S2018N1	. NUTPLATE-REFER TO NOTE 2		01	
- 252	MS27039-0807	. SCREW-REFER TO NOTE 2 AND NOTE 3		01	

NOTE 1—AIRPLANES -0001 THRU -0259 INCORPORATING SB560-34-113.

NOTE 2—AIRPLANES -0260 THRU -0538 INCORPORATING SB560-34-107.

NOTE 3—AIRPLANES -0260 THRU -0538 INCORPORATING SB560-34-108.

NOTE 4—AIRPLANES -0260 THRU -0538 INCORPORATING SB560-34-114. R

- ITEM NOT ILLUSTRATED

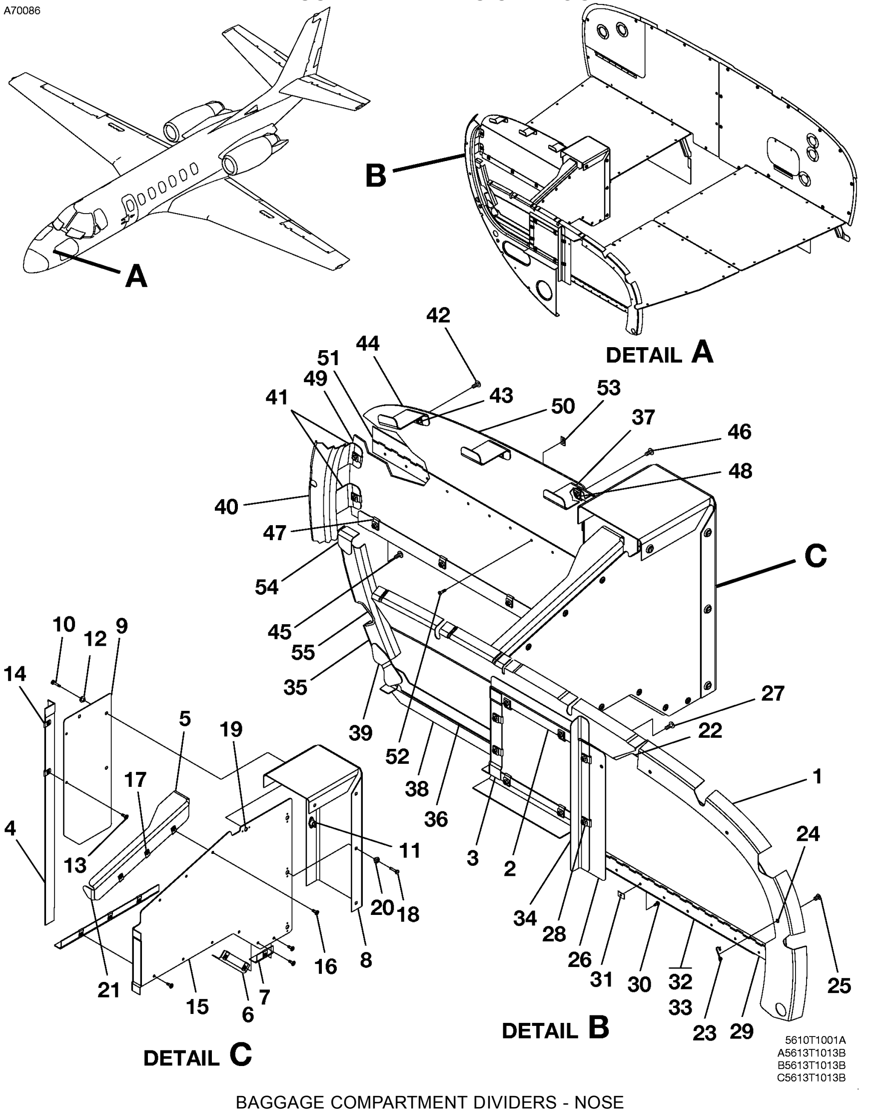

BAGGAGE COMPARTMENT DIVIDERS - NOSE
FIGURE 03A (SHEET 1)

FIG ITEM	PART NUMBER	NOMENCLATURE 1 2 3 4 5 6 7			UNITS PER ASSY
03A					
-		BAGGAGE COMPARTMENT DIVIDERS - NOSE	0752	& ON	RF
1	6313282-35	. SUPPORT			01
2	6313282-58	. SUPPORT			01
3	6313282-17	. ANGLE			01
4	6313282-36	. ANGLE			01
5	6313282-59	. SUPPORT			01
6	6513009-11	. ANGLE			01
7	6513009-12	. ANGLE			01
8	6513009-9	. COVER			01
9	6513009-8	. SIDE PANEL-RH			01
		ATTACHING PARTS			
10	S3275-4S	. STUD			03
11	S3275E202	. RECEPTACLE			03
12	S3275-300	. RETAINER RING			03
13	AN525-832R7	. SCREW			02
14	S1477-08	. NUT			02
		—*—			
15	6513009-10	. SIDE PANEL-LH			01
		ATTACHING PARTS			
16	AN525-832R7	. SCREW			11
17	S1477-08	. NUT			11
18	S3275-4S	. STUD			04
19	S3275E202	. RECEPTACLE			04
20	S3275-300	. RETAINER RING			04
		—*—			
21	6513009-7	. CLIP	0752	0784	01
- 21A	6313282-20	. CLIP	0785	& ON	01
22	6313319-11	. ACCESS PANEL-FWD LH			01
		ATTACHING PARTS			
23	1219-3225-SS	. SPRING			04 R
24	GH3	. HALF GROMMET			04
25	AJ3-20	. STUD			04
		—*—			
26	6313282-54	. FWD PANEL			01
		ATTACHING PARTS			
27	AN525-832R7	. SCREW			08
28	S1477-08	. NUT			08
		—*—			
29	6313080-48	. HINGE ASSY			01
		ATTACHING PARTS			
30	S1021A4-8C	. SCREW			07
31	NAS446-1-3	. NUT			07
		—*—			
32	MS20001PH5-1300	. . HINGE HALF			02
33	MS20253P2-1264	. . HINGE PIN			01
34	6313080-37	. ANGLE UPPER			01
35	6313282-66	. FRAME RH			01
36	6313282-30	. ANGLE			01
37	6313282-27	. ANGLE			01
38	6313282-29	. ANGLE			01
39	6313282-11	. SPLICE			01
40		. FRAME REFER TO 53-10-00 FIGURE 02A			RF
41	6313282-26	. ANGLE			04
		ATTACHING PARTS			
42	AN525-832R7	. SCREW			01
43	S1477-08	. NUT			01
		—*—			
44	6313282-60	. FWD PANEL ASSY-RH			01
		ATTACHING PARTS			
45	AN525-832R6	. SCREW			04
46	AN525-832R7	. SCREW			04
47	S1477-8A	. NUT			04
48	S1477-08	. NUT			04
		—*—			
49	6313282-61	. . FWD PANEL-RH BOTTOM			01
50	6313282-40	. . FWD PANEL-RH TOP			01
51	6313282-41	. . HINGE ASSY			01
		ATTACHING PARTS			
52	S1021Z4-5C	. . SCREW			10
53	NAS446-1-3	. . NUT			10
		—*—			
54	6313282-10	. CLIP			01
55	S1050-1	. GROMMET-2.90 INCHES BKI			AR

- ITEM NOT ILLUSTRATED

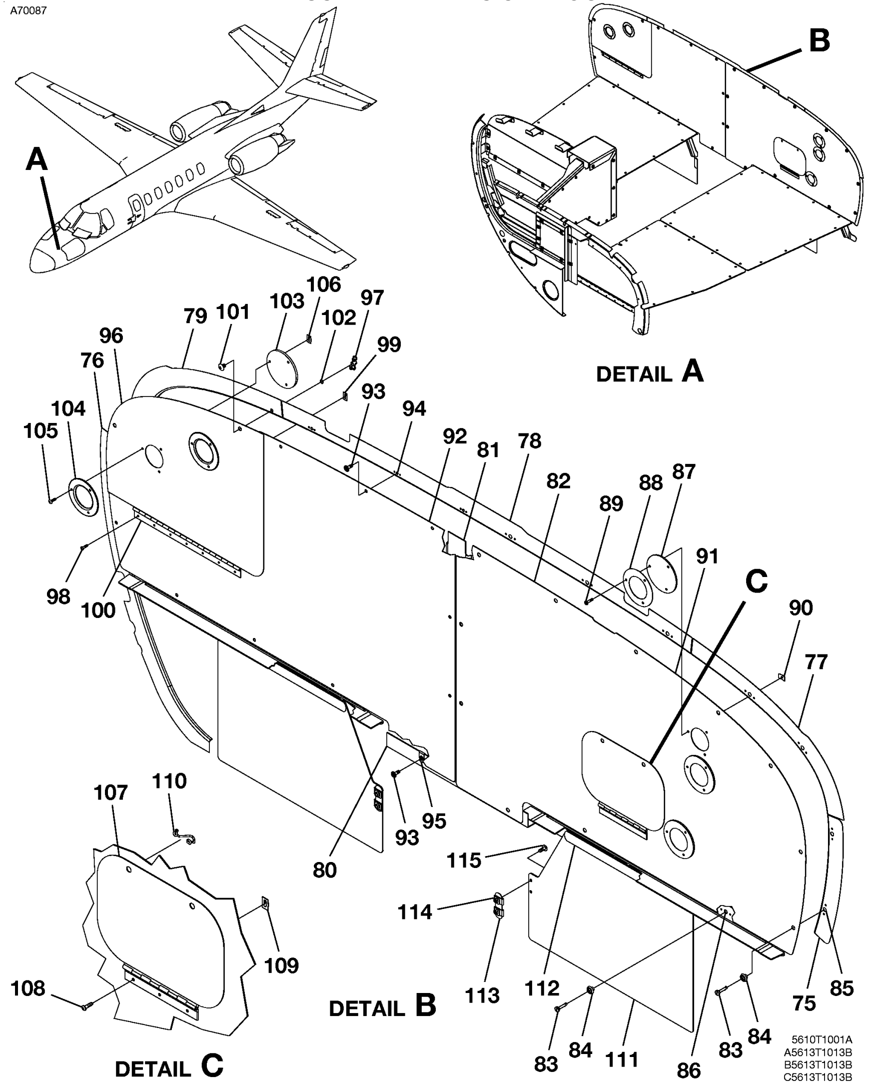

BAGGAGE COMPARTMENT DIVIDERS - NOSE
FIGURE 03A (SHEET 2)

FIG ITEM	PART NUMBER	NOMENCLATURE 1 2 3 4 5 6 7			UNITS PER ASSY
03A					
75	6313319-5	. SUPPORT-AFT LH			01
76	6513005-51	. SUPPORT-AFT RH			01
77	6513006-18	. SUPPORT UPR LH			01
78	6313080-21	. CENTER SUPPORT			01
79	6313080-22	. SUPPORT UPPER RH			01
80	6513006-31	. ANGLE			01
81	6513006-14	. STIFFENER			01
82	6513009-4	. BAGGAGE WALL ASSY	0752 0756	0754 & ON	01
- 82A	DDA05346-1	. BAGGAGE WALL ASSY REF 6513009	0755	0755	01
		ATTACHING PARTS			
83	S3275-4S	. STUD			12
84	S3275-300	. RETAINER RING			12
85	S3275E202	. RECEPTACLE			10
86	S3275E204	. RECEPTACLE			02
		—*—			
87	5513085-35	. . INSPECTION LENS			03
88	5513085-62	. . TRIM RING			03
		ATTACHING PARTS			
89	S1021A4-8C	. . SCREW			03
90	NAS446-1-3	. . NUT			03
		—*—			
91	6513009-5	. . BAGGAGE WALL	0752 0756	0754 & ON	01
- 91A	DDA05346-2	. . BAGGAGE WALL REF 6513009	0755	0755	01
92	6513009-6	. BAGGAGE WALL			01
		ATTACHING PARTS			
93	AN525-832R7	. SCREW			10
94	MS21069L08	. NUTPLATE			09
95	S1477-08	. NUT			01
		—*—			
96	6513006-9	. ACCESS PANEL ASSY			01
		ATTACHING PARTS			
97	S4-225SS	. SPRING			02
98	S1021A4-8C	. SCREW			06
99	NAS446-1-3	. NUT			06
		—*—			
100	6513006-11	. . HINGE ASSY			01
101	APRJ4-25	. . STUD			02
102	SR4SS	. . SNAP RING			02
103	5513085-35	. . INSPECTION LENS			02
104	5513085-62	. . TRIM RING			02
		ATTACHING PARTS			
105	S1021A4-8C	. . SCREW			03
106	NAS446-1-3	. . NUT			03
		—*—			
107	6513006-25	. ACCESS PANEL ASSY			01
		ATTACHING PARTS			
108	S1021A4-8C	. SCREW			03
109	NAS446-1-3	. NUT			03
		—*—			
110	S4-225SS	. SPRING			02
111	6513009-13	. CURTAIN-LH AND RH			02
112	6513009-14	. RETAINER-LH AND RH			02
113	6513009-15	. RETAINER-LH AND RH			02
114	S1477-08	. NUT-LH AND RH			04
115	AN525-832R7	. SCREW-LH AND RH			04

- ITEM NOT ILLUSTRATED

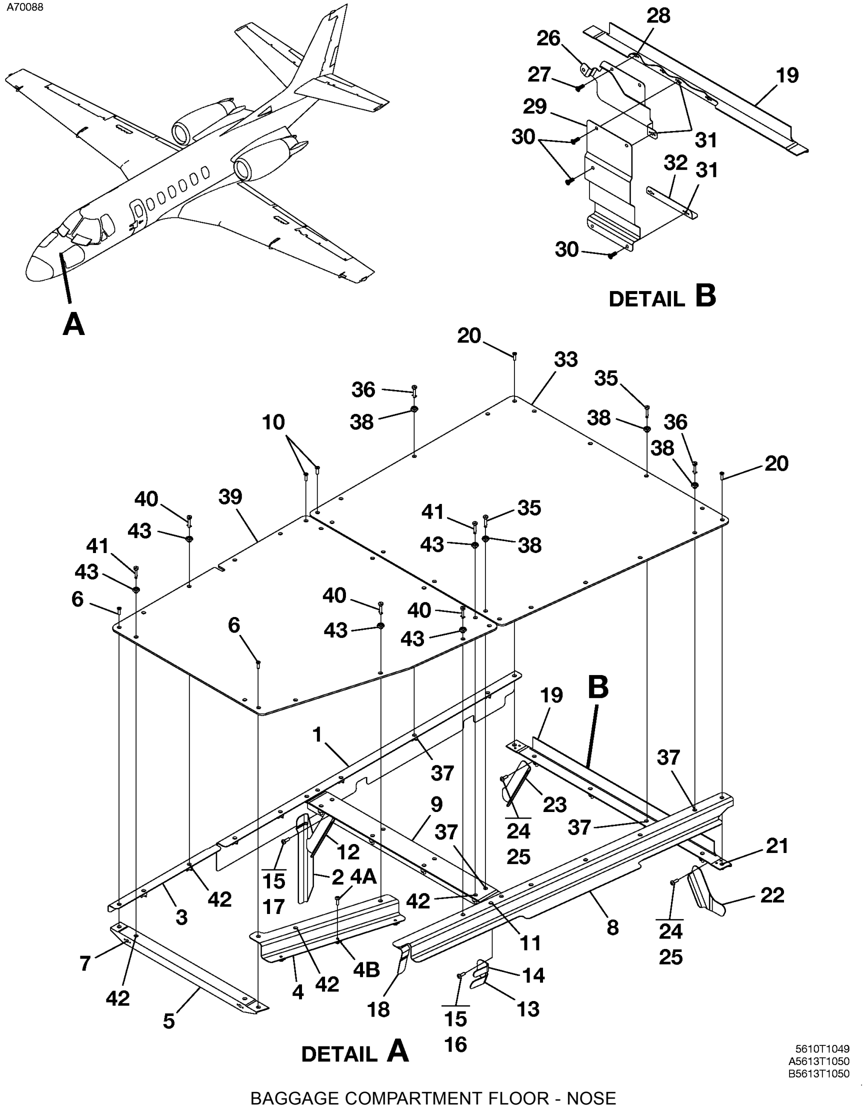

BAGGAGE COMPARTMENT FLOOR - NOSE
FIGURE 03B (SHEET 1)

FIG ITEM	PART NUMBER	NOMENCLATURE 1 2 3 4 5 6 7			UNITS PER ASSY
03B					
-		BAGGAGE COMPARTMENT FLOOR - NOSE	0751	& ON	RF
1	6313316-4	. INBD ANGLE-SHELF SUPPORT			01
2	6313316-13	. INBD ANGLE-SHELF SUPPORT			01
3	6313316-12	. INBD ANGLE-FWD SHELF SUPPORT			01
4	6313316-2	. ZEE-FWD SHELF SUPPORT			01
4A	MS35206-245	. SCREW			03
4B	MS21075L08N	. NUTPLATE			03
5	9156000-22	. SHELF SUPPORT ASSY - FWD			01
- 5A	9690529-3	. SUPPORT TEE-FWD REFER TO NOTE 1			01
		ATTACHING PARTS			
6	MS24694-S5	. SCREW			02
		—*—			
- 6A	MS21056L08	. NUTPLATE REFER TO NOTE 1			02
7	MS21070L08	. . NUTPLATE			02
8	6313316-14	. ZEE-AFT SHELF SUPPORT			01
9	6313316-9	. SHELF SUPPORT TEE ASSY			01
		ATTACHING PARTS			
10	MS24694-S5	. SCREW			04
		—*—			
11	MS21074L08	. . NUTPLATE			04
12	6313316-5	. BRACKET-INBD SHELF SUPPORT			01
13	6313316-16	. CLIP-LWR			01
14	6313316-15	. CLIP-UPR			01
15	MS27039-0807	. SCREW			02
16	MS21056L08	. NUTPLATE			01
17	MS21059L08	. NUTPLATE			01
18	6313316-1	. CLIP-SHELF SUPPORT			01
19	9656056-5	. SHELF SUPPORT ASSY - AFT			01
		ATTACHING PARTS			
20	MS24694-S5	. SCREW			02
		—*—			
21	MS21056L08	. . NUTPLATE			02
22	6313316-6	. BRACKET-OUTBD SHELF SUPPORT			01
23	6313316-5	. BRACKET-INBD SHELF SUPPORT			01
		ATTACHING PARTS			
24	MS27039-0807	. SCREW			01
25	MS21069L08	. NUTPLATE			01
		—*—			
26	6313316-17	. COVER-INBD	0751	0769	01
		ATTACHING PARTS			
27	AN525-832R7	. SCREW	0751	0769	03
28	MS21069L08	. NUTPLATE	0751	0769	03
		—*—			
29	6313316-18	. COVER-OUTBD	0751	0769	01
		ATTACHING PARTS			
30	AN525-832R7	. SCREW	0751	0769	05
31	MS21069L08	. NUTPLATE	0751	0769	05
		—*—			
32	6313316-19	. ANGLE	0751	0769	01
33	6313316-8	. LH BAGGAGE SHELF-AFT	0751	0786	01
- 34	6313316-20	. LH BAGGAGE SHELF-AFT	0787	& ON	01
		ATTACHING PARTS			
35	S3275-6S	. STUD			07
36	S3275-5S	. STUD			07
37	S3275E202	. RECEPTACLE			15
38	S3275-300	. RETAINER RING			15
		—*—			
39	6313316-7	. LH BAGGAGE SHELF-FWD			01
		ATTACHING PARTS			
40	S3275-5S	. STUD			07
41	S3275-6S	. STUD			06
42	S3275E202	. RECEPTACLE			13
43	S3275-300	. RETAINER RING			13
		—*—			

NOTE 1—AIRPLANES -0001 THRU -0259 INCORPORATING SB560-34-113.

- ITEM NOT ILLUSTRATED

A70089

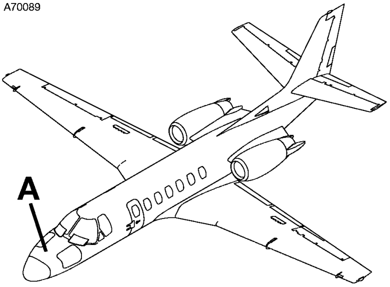

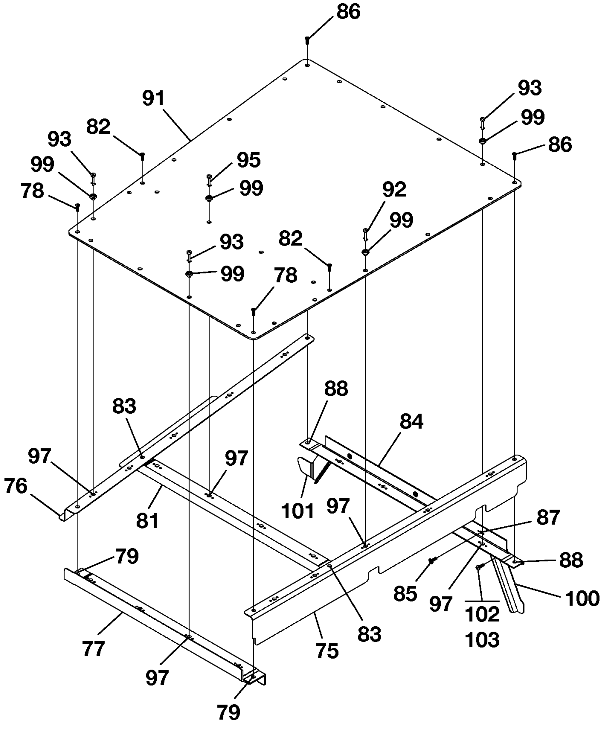

DETAIL A

5610T1049
A5613T1051

BAGGAGE COMPARTMENT FLOOR - NOSE
FIGURE 03B (SHEET 2)

FIG ITEM	PART NUMBER	NOMENCLATURE 1 2 3 4 5 6 7			UNITS PER ASSY	
03B						
75	9156026-3	. INBD ANGLE-SHELF SUPPORT			01	
76	9156026-2	. OUTBD SUPPORT			01	
77	9156026-5	. FWD SUPPORT			01	
		ATTACHING PARTS				
78	MS24693-S50	. SCREW			02	R
79	MS21070L08	. NUTPLATE			02	
		—*—				
- 80	9156026-4	. MID SUPPORT	0751	0754	01	
81	6313180-20	. MID SUPPORT	0755	& ON	01	
		ATTACHING PARTS				
82	MS24693-S50	. SCREW			02	R
83	MS21070L08	. NUTPLATE			02	
		—*—				
84	9156026-6	. AFT SUPPORT			01	
		ATTACHING PARTS				
85	AN525-832R7	. SCREW			03	
86	MS24693-S50	. SCREW			02	R
87	MS21059L08	. NUTPLATE			03	
88	MS21070L08	. NUTPLATE			02	
		—*—				
- 89	9156026-8	. FWD BOTTOM COVER	0751	0754	01	
- 90	9156026-7	. AFT BOTTOM COVER	0751	0754	01	
91	6313180-19	. COVER	0755	& ON	01	
92	S3275-5S	. STUD			05	
93	S3275-6S	. STUD			13	
- 94	S3275-8S	. STUD	0751	0754	08	
95	S3275-8S	. STUD	0755	& ON	04	
- 96	S3275E202	. RECEPTACLE	0751	0754	26	
97	S3275E202	. RECEPTACLE	0755	& ON	22	
- 98	S3275-300	. RETAINER RING	0751	0754	26	
99	S3275-300	. RETAINER RING	0755	& ON	22	
100	9156026-10	. BRACKET-INBD SHELF SUPPORT			01	
101	9156026-9	. BRACKET-OUTBD SHELF SUPPORT			01	
		ATTACHING PARTS				
102	MS27039-0807	. SCREW			01	
103	MS21060L08	. NUTPLATE			01	
		—*—				

- ITEM NOT ILLUSTRATED

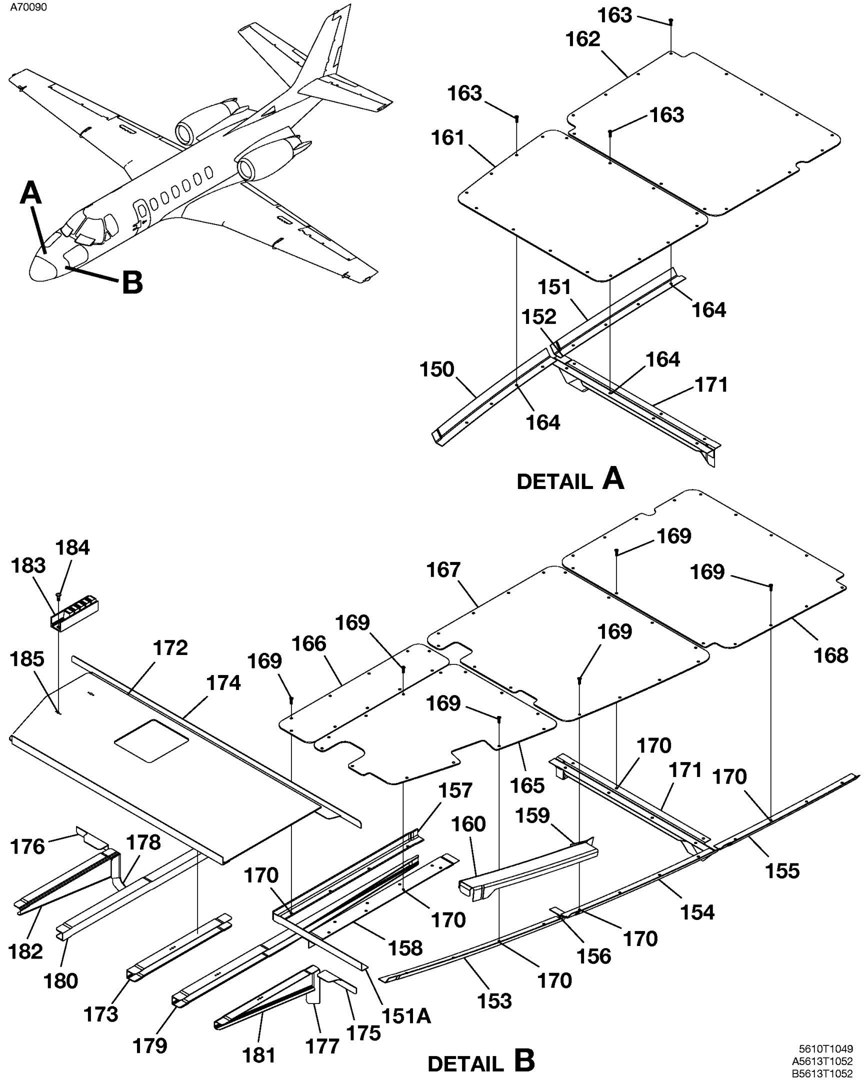

BAGGAGE COMPARTMENT FLOOR - NOSE
FIGURE 03B (SHEET 3)

FIG ITEM	PART NUMBER	NOMENCLATURE 1 2 3 4 5 6 7			UNITS PER ASSY
03B					
150	6313081-58	. ANGLE-CENTER RH			01
151	6313081-60	. ANGLE AFT RH			01
151A	6313600-2	. SUPPORT ANGLE			01
152	6313081-18	. CLIP RH			01
153	6313282-21	. ANGLE			01
154	6313081-57	. ANGLE-CENTER LH			01
155	6313081-59	. ANGLE AFT LH			01
156	6313081-17	. CLIP LH			01
157	6313081-19	. ANGLE LH			01
158	9117003-4	. SUPPORT TEE			01
159	6313081-29	. GUSSET LH			01
160	6313081-23	. CLIP LH			01
161	6313282-31	. FWD FLOOR PANEL RH			01
162	6313282-45	. AFT FLOOR PANEL			01
		ATTACHING PARTS			
163	AN525-832R7	. SCREW			AR
164	S1477-08	. NUT			AR
		—*—			
165	9654572-7	. SHELF			01
166	9117003-2	. SHELF			01
167	9108011-2	. SHELF			01
168	6313282-45	. AFT FLOOR PANEL			01
		ATTACHING PARTS			
169	AN525-832R7	. SCREW			AR
170	S1477-08	. NUT			AR
		—*—			
171		. NOSE BULKHEADS REFER TO 53-10-00 FIGURE 02A			RF
172	9156010-4	. LOWER SHELF			01
173	9156010-15	. CHANNEL			01
174	9156600-15	. ANGLE-LWR			01
175	9156600-21	. SUPPORT CLIP-LH			01
176	9156600-22	. SUPPORT CLIP-RH			01
177	9156600-7	. SUPPORT TEE-LH			01
178	9156600-8	. SUPPORT TEE-RH			01
179	9156010-11	. CHANNEL - LH			01
180	9156010-12	. CHANNEL - RH			01
181	9156010-9	. SUPPORT - LH			01
182	9156010-10	. SUPPORT - RH			01
183	CTJ-3D-08	. RAIL	0803	& ON	01
		ATTACHING PARTS			
184	MS35207-262	. SCREW	0803	& ON	02
185	MS21069L3	. NUTPLATE	0803	& ON	02
		—*—			

- ITEM NOT ILLUSTRATED

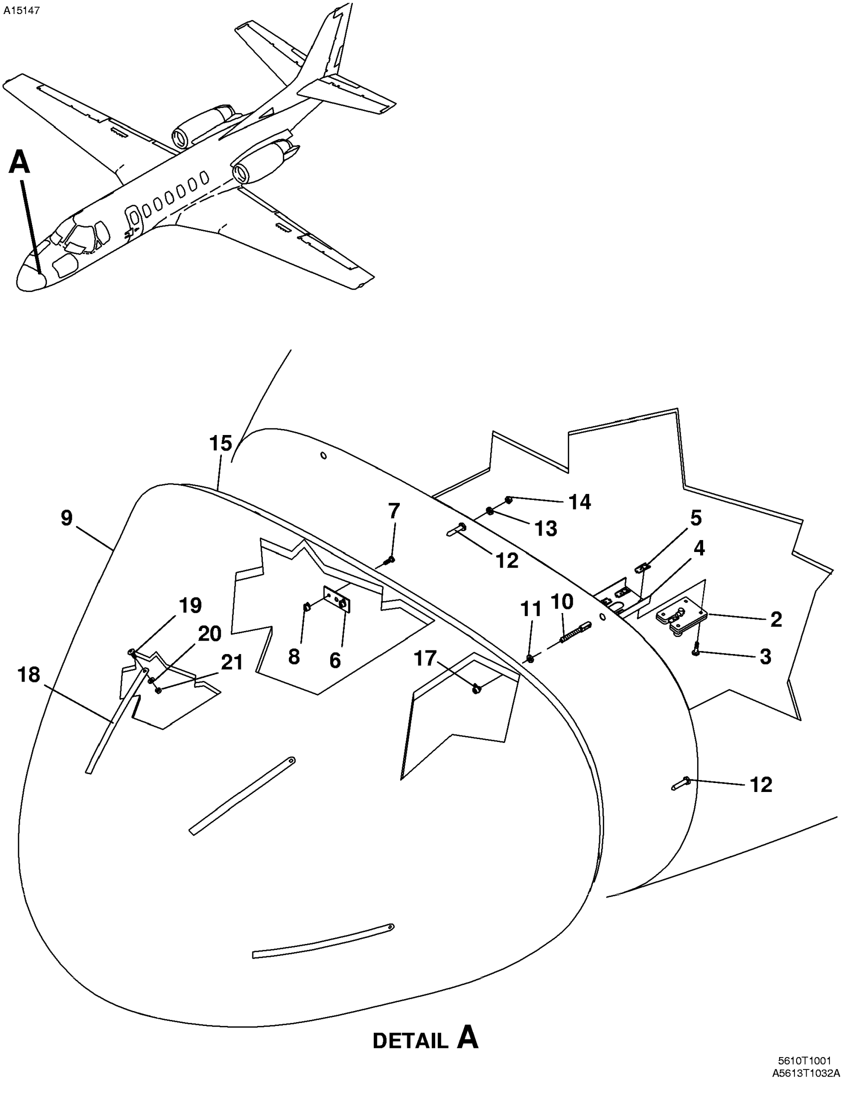

AERODYNAMIC FAIRINGS
FIGURE 01A (SHEET 1)

FIG ITEM	PART NUMBER	NOMENCLATURE 1 2 3 4 5 6 7			UNITS PER ASSY
01A					
-		AERODYNAMIC FAIRINGS	0260	& ON	RF
- 1		. RADOME INSTALLATION			RF
2	S2893-11	. . ROTARY LATCH ASSY FSO S2893-13	0260	0454	NP
- 2A	S2893-13	. . ROTARY LATCH ASSY	0455	0764	04
- 2B	S2893-15	. . ROTARY LATCH ASSY	0765	& ON	04
		ATTACHING PARTS			
3	AN3-6A	. . BOLT			04
		—*—			
4	6313100-15	. . BRACKET ASSY	0260	0690	04
- 4A	6313100-19	. . BRACKET ASSY-UPPER LH	0691	& ON	01
- 4B	6313100-20	. . BRACKET ASSY-UPPER RH	0691	& ON	01
- 4C	6313100-23	. . BRACKET ASSY-LOWER LH FSO 6313100-27	0691	0764	NP
- 4D	6313100-27	. . BRACKET ASSY-LOWER LH	0765	& ON	01
- 4E	6313100-24	. . BRACKET ASSY-LOWER RH FSO 6313100-28	0691	0764	NP
- 4F	6313100-28	. . BRACKET ASSY-LOWER RH	0765	& ON	01
5	MS21061-3	. . . NUTPLATE	0260	0690	04
- 5A	MS21061L3	. . . NUTPLATE	0691	& ON	04
6	6313101-27	. . GUIDE ASSY	0260	0750	04
- 6A	6313101-27	. . GUIDE ASSY	0752	& ON	02
- 6B	6313030-16	. . GUIDE PLATE ASSY	0752	& ON	02
		ATTACHING PARTS			
7	MS27039C1-09	. . SCREW			02
		—*—			
8	MS21073-3	. . . NUTPLATE			02
9	6313101-45	. . RADOME ASSY FSO 6313101-47	0260	0360	NP
- 9A	6313101-47	. . RADOME ASSY-FSO 6313101-202	0361	& ON	NP R
- 9B	6313101-202	. . RADOME ASSY-FOR SPARES ONLY	0260	& ON	01 R
10	S2895-2	. . . EYEBOLT			04
11	AN316-4R	. . . NUT			04
12	6313100-17	. . . GUIDE PIN			04
		ATTACHING PARTS			
13	S1450-4-12-032	. . . WASHER			08
14	MS21042-4	. . . NUT			04
		—*—			
15	6313101-23	. . . SEAL			01
- 16	6313101-24	. . . SEAL SPLICE			01
17	MS21073L4	. . . NUTPLATE			04
- 17A	6313101-25	. SCUPPER			01
18	S2800-229	. . DIVERTER STRIP REF LDS10-01-48-1W180 REFER TO NOTE 1	0260	& ON	04
- 18A	S2800-265	. . DIVERTER STRIP REF LDS10-01-48-1W145 FSO S2800-582	0361	0614	NP
- 18B	S2800-582	. . LIGHTNING DIVERTER STRIP REF LDS10-01-64-1-OV-03-W-145	0615	& ON	04
		ATTACHING PARTS			
19	AN525-10R8	. . SCREW FSO S4189-1	0260	0614	NP
- 19B	S3711-2	. . SCREW FSO S4189-1	0615	& ON	NP
- 19C	S4189-1	. . SCREW	0260	& ON	01
20	NAS1149F0332P	. . WASHER	0260	0614	01
- 20A	MS35333-39	. . WASHER	0615	& ON	01
21	MS21042-3	. . NUT	0260	0614	01
- 21A	AN315-3R	. . NUT	0615	& ON	01
		—*—			

NOTE 1—RECOMMENDED TO USE S2800-265, S2800-229 OPTIONAL USE ONLY, DO NOT MIX STRIPS.

- ITEM NOT ILLUSTRATED

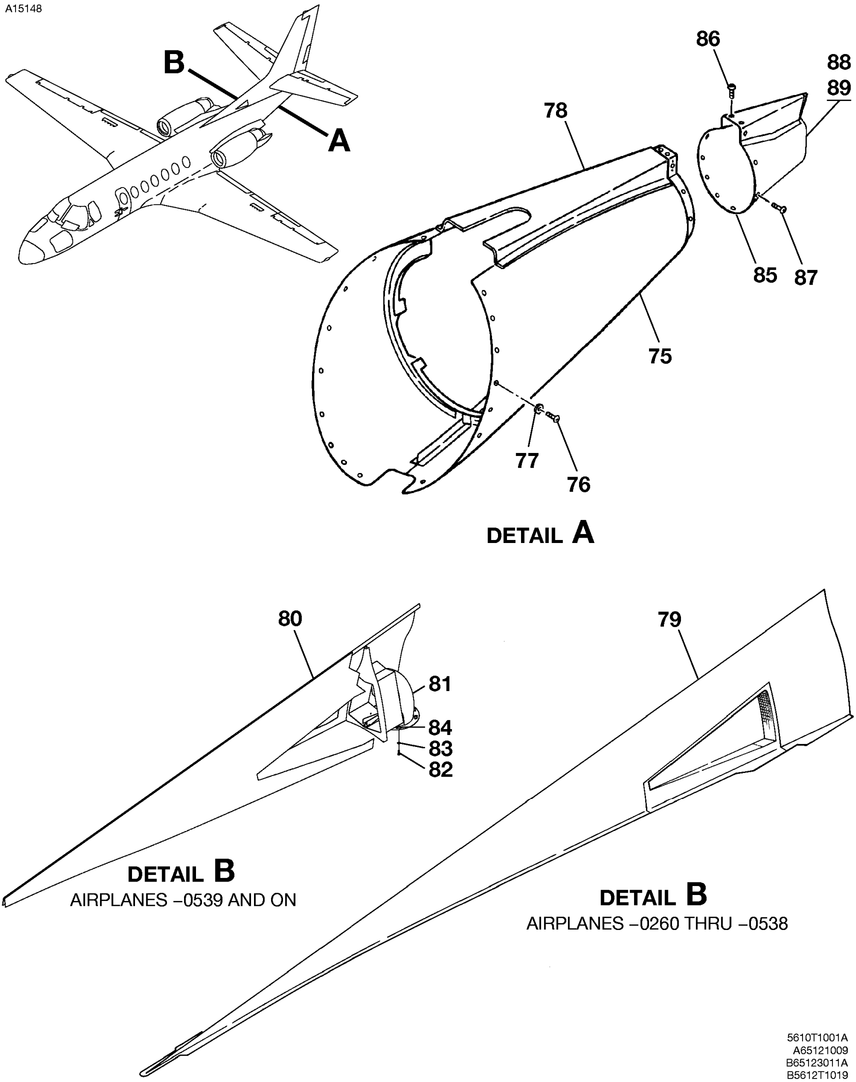

AERODYNAMIC FAIRINGS
FIGURE 01A (SHEET 2)

FIG ITEM	PART NUMBER	NOMENCLATURE 1 2 3 4 5 6 7			UNITS PER ASSY
01A					
75	6512109-20	. STINGER ASSY	0260	0538	01
- 75A	6512109-27	. STINGER ASSY	0539	0636	01
- 75B	6512109-32	. STINGER ASSY	0637	0755	01
- 75C	6512109-36	. STINGER ASSY	0756	& ON	01
		ATTACHING PARTS			
76	MS24694-S5	. SCREW			16
77	5512080-32	. WASHER-DIMPLED			16
		—*—			
78	6512109-16	. . STINGER CAP ASSY	0260	0538	01
- 78A	6512109-28	. . STINGER CAP	0539	& ON	01
- 78B	6512071-53-1S	. DORSAL FIN ASSY REFER TO NOTE 1	0260	0292	01
			0294	0300	
79	6512112-2	. DORSAL FIN ASSY REFER TO NOTE 1 AND NOTE 2	0293	0293	01
			0301	0306	
- 79A	6512071-54	. DORSAL ASSY REFER TO NOTE 3	0260	0300	01
- 79B	6512112-23	. DORSAL FIN ASSY REFER TO NOTE 1	0307	0538	01
- 79C	6512071-15	. . RIB ASSY REFER TO NOTE 1 AND NOTE 3	0260	0300	01
- 79D	6512112-18	. . RIB ASSY REFER TO NOTE 1 AND NOTE 2	0301	0306	01
- 79E	6512112-5	. . . RIB ASSY	0307	0538	01
80	6512596-1	. DORSAL FIN ASSY-REFER TO NOTE 1	0539	0804	01
- 80A	6512596-2	. DORSAL FIN ASSY-REFER TO NOTE 1	0805	& ON	01
81	6512072-18	. . DUCT ASSY FSO 6512072-19	0539	0804	NP
- 81A	6512072-19	. . DUCT ASSY	0805	& ON	01
		ATTACHING PARTS			
82	MS27039-1-10	. . SCREW	0539	& ON	08
83	NAS1149F0332P	. . WASHER	0539	& ON	08
		—*—			
84	MS21059L3	. . . NUTPLATE	0539	& ON	08
85	5538321-16	. CAP ASSY-STINGER	0260	0755	01
- 85A	5538321-20	. AFT CAP ASSY-STINGER	0756	& ON	01
		ATTACHING PARTS			
86	MS24693-S25	. SCREW			04
87	MS35206-227	. SCREW			06
		—*—			
88		. . LIGHT ASSY-TAIL NAVIGATION REFER TO 33-40-00 FIGURE 06			RF
89		. . STATIC WICK REFER TO 23-60-00 FIGURE 02			RF

NOTE 1—REFER TO MAINTENANCE MANUAL FOR INSTALLATION

NOTE 2—AIRPLANES -0293 THRU -0293 AND -0301 AND ON AND -0260 THRU -0292 AND -0294 THRU -0300 INCORPORATING SB560-53-18

NOTE 3—AIRPLANES -0260 THRU -0300 NOT INCORPORATING SB560-53-18.

- ITEM NOT ILLUSTRATED

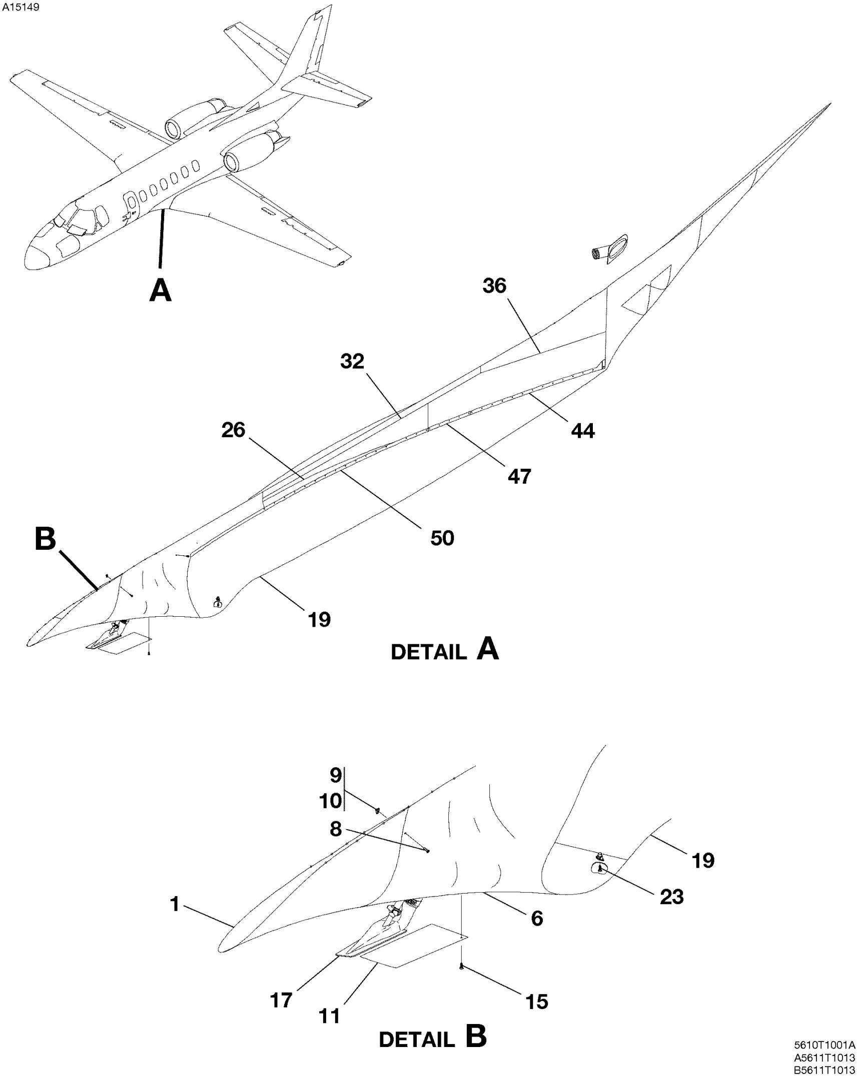

WING TO FUSELAGE FAIRINGS
FIGURE 02 (SHEET 1)

FIG ITEM	PART NUMBER	NOMENCLATURE 1 2 3 4 5 6 7			UNITS PER ASSY
02					
-		WING TO FUSELAGE FAIRINGS	0001	0538	RF
1	6511255-3	. FAIRING BOND ASSY-FORWARD LH	0001	0215	01
- 2	6511255-11	. FAIRING BOND ASSY-FORWARD LH	0216	0538	01
- 3	6511255-4	. FAIRING BOND ASSY-FORWARD RH	0001	0215	01
- 4	6511255-12	. FAIRING BOND ASSY-FORWARD RH	0216	0538	01
- 5		. PANEL-DIFFUSER REFER TO 30-10-01 FIGURE 01			RF
6	6511261-1	. FAIRING BOND ASSY-FORWARD LH			01
- 7	6511261-2	. FAIRING BOND ASSY-FORWARD RH			01
		ATTACHING PARTS			
8	MS24694-S6	. SCREW			AR
9	MS21075L08N	. NUTPLATE			AR
10	NAS1473A08	. NUTPLATE			AR
		—*—			
11	6511111-33	. DOOR-LH ACCESS BOND ASSY	0001	0215	01
- 12	6511111-79	. DOOR-LH ACCESS BOND ASSY	0216	0538	01
- 13	6511111-34	. DOOR-RH ACCESS BOND ASSY	0001	0215	01
- 14	6511111-80	. DOOR-RH ACCESS BOND ASSY	0216	0538	01
		ATTACHING PARTS			
15	MS24694-S6	. SCREW			12
- 16	MS21075L08N	. NUTPLATE			12
		—*—			
17	6514108-3	. SCOOP-RAM AIR LH			01
- 18	6514108-4	. SCOOP-RAM AIR RH			01
19	6511255-5	. FAIRING BOND ASSY-LOWER LH	0001	0215	01
- 20	6511255-13	. FAIRING BOND ASSY-LOWER LH	0216	0306	01
- 20A	6511255-17	. FAIRING BOND ASSY-LOWER LH	0307	0475	01
- 20B	6511255-33	. FAIRING BOND ASSY-LOWER LH	0476	0538	01
- 21	6511255-6	. FAIRING BOND ASSY-LOWER RH	0001	0215	01
- 22	6511255-14	. FAIRING BOND ASSY-LOWER RH	0216	0306	01
- 22A	6511255-18	. FAIRING BOND ASSY-LOWER RH	0307	0475	01
- 22B	6511255-34	. FAIRING BOND ASSY-LOWER RH	0476	0538	01
		ATTACHING PARTS			
23	MS24694-S6	. SCREW			AR
- 24	MS21075L08N	. NUTPLATE			AR
- 25	NAS1473A08	. NUTPLATE			AR
		—*—			
26	6511170-45	. PANEL ASSY LH	0001	0215	01
- 27	6511170-63	. PANEL BOND ASSY LH	0216	0538	01
- 28	6511170-46	. PANEL ASSY RH	0001	0215	01
- 29	6511170-64	. PANEL BOND ASSY RH	0216	0538	01
- 30	MS24694-S4	. SCREW ATTACHING PART FOR 6511170-45			AR
- 31	MS21075L08N	. NUTPLATE ATTACHING PART FOR 6511170-45			AR
32	6511170-17	. SUPPORT LH	0001	0215	01
- 33	6511170-69	. SUPPORT LH	0216	0538	01
- 34	6511170-18	. SUPPORT RH	0001	0215	01
- 35	6511170-70	. SUPPORT RH	0216	0538	01
36	6511150-73	. PANEL ASSY LH-FSO 6511170-57	0001	0097	NP
- 37	6511170-57	. PANEL ASSY LH	0098	0215	01
- 38	6511170-65	. PANEL BOND ASSY LH FSO 6511170-81	0216	0411	NP
- 38A	6511170-81	. PANEL BOND ASSY LH	0412	0538	01
- 39	6511150-74	. PANEL ASSY RH	0001	0097	01
- 40	6511170-58	. PANEL ASSY RH	0098	0215	01
- 41	6511170-66	. PANEL BOND ASSY RH FSO 6511170-82	0216	0411	NP
- 41A	6511170-82	. PANEL BOND ASSY RH	0412	0538	01
- 42	MS24693-S49	. SCREW			AR
- 43	MS21075L08N	. NUTPLATE			AR
44	6511170-19	. ANGLE LH-AFT			01
- 45	6511170-20	. ANGLE RH-AFT			01
- 46	MS21075L08	. NUTPLATE-LH AND RH			28
47	6511256-7	. ANGLE ASSY-LH MID			01
- 48	6511256-8	. ANGLE ASSY-RH MID			01
- 49	MS21075L08	. . NUTPLATE			05
50	6511256-9	. ANGLE ASSY-LH FWD			01
- 51	6511256-10	. ANGLE ASSY-RH FWD			01
- 52	MS21075L08	. . NUTPLATE			16 R

- ITEM NOT ILLUSTRATED

A15123

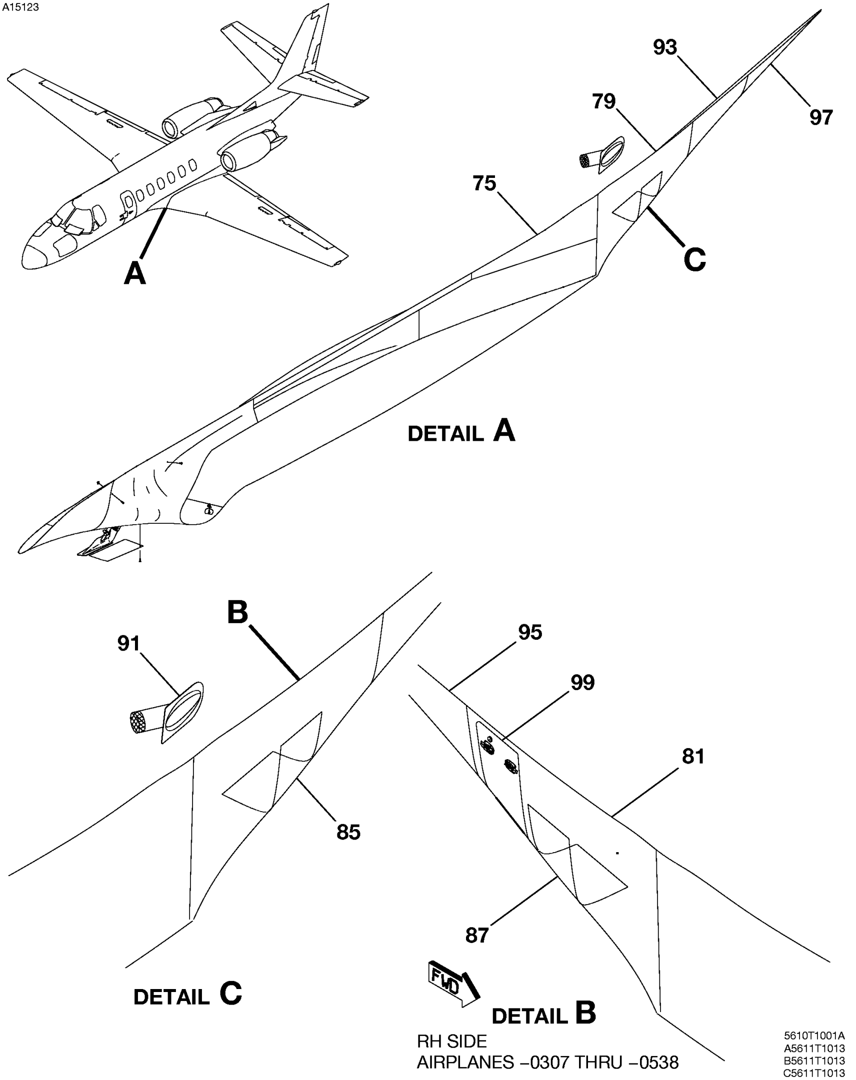

RH SIDE
AIRPLANES −0307 THRU −0538

5610T1001A
A5611T1013
B5611T1013
C5611T1013

WING TO FUSELAGE FAIRINGS
FIGURE 02 (SHEET 2)

FIG ITEM	PART NUMBER	NOMENCLATURE 1 2 3 4 5 6 7			UNITS PER ASSY
02					
75	6511170-9	. SUPPORT LH	0001	0215	01
- 76	6511170-67	. SUPPORT LH	0216	0538	01
- 77	6511170-10	. SUPPORT RH	0001	0215	01
- 78	6511170-68	. SUPPORT RH	0216	0538	01
79	6511113-3	. AFT FAIRING LH FSO 6511113-19	0001	0215	NP
- 80	6511113-19	. AFT FAIRING LH	0216	0538	01
81	6511113-4	. AFT FAIRING RH	0001	0215	01
- 82	6511113-20	. AFT FAIRING RH	0216	0306	01
- 83	6511113-30	. FAIRING-RH AFT	0307	0395	01
- 84	6511113-60	. FAIRING-RH AFT	0396	0462	01
- 84A	6511113-62	. FAIRING-RH AFT	0463	0538	01
85	6514460-5	. ACCESS DOOR LH	0001	0215	01
- 86	6514460-7	. ACCESS DOOR LH	0216	0538	01
87	6514460-6	. ACCESS DOOR RH	0001	0215	01
- 88	6514460-8	. ACCESS DOOR RH	0216	0538	01
- 89	MS24694-S4	. SCREW ATTACHING PART FOR 6514460-5			16
- 90	MS21075L08N	. NUTPLATE ATTACHING PART FOR 6514460-5			16
91	6514460-3	. SCOOP ASSY-EXHAUST LH			01
- 92	6514460-4	. SCOOP ASSY-EXHAUST RH			01
93	6511172-3	. FAIRING SKIN LH	0001	0215	01
- 94	6511172-7	. FAIRING SKIN LH	0216	0538	01
95	6511169-2	. FAIRING SKIN-RH	0001	0215	01
- 96	6511169-3	. FAIRING SKIN-RH	0216	0538	01
97	6511171-4	. FAIRING-LH	0001	0215	01
- 98	6511171-5	. FAIRING-LH	0216	0538	01
99		. DOOR-SINGLE POINT REFUELING ACCESS-REFER TO 52-40-00 FIGURE 02			RF

- ITEM NOT ILLUSTRATED

CHAPTER SECTION SUBJECT		NUMBER OF PAGES	DATE
54 - TITLE			
54 - LIST OF EFFECTIVE PAGES			
54 - RECORD OF TEMPORARY REVISIONS			
54 - TABLE OF CONTENTS			
54-10-00	Figure 01	8	Aug 1/2015
54-10-00	Figure 02	2	Aug 1/2013
54-40-00	Figure 01	4	Aug 1/2007
54-40-00	Figure 02	2	Aug 1/2007
54-40-00	Figure 03	6	Aug 1/2007
54-50-00	Figure 01	2	Aug 1/2007
54-50-00	Figure 02	2	Feb 1/2012
54-50-00	Figure 03	2	Feb 1/2007
54-60-00	Figure 01	6	Aug 1/2007

© Cessna Aircraft Company

SUBJECT	CHAPTER SECTION SUBJECT	FIGURE	EFFECTIVITY START	EFFECTIVITY END
ENGINE NACELLES	54-10-00	01	0001	0538
ENGINE NACELLES	54-10-00	02	0539	& ON
ENGINE/NACELLE ATTACH FITTINGS	54-40-00	01	0001	0538
ENGINE/NACELLES ATTACH FITTINGS	54-40-00	02	0539	& ON
PYLON FIREWALL	54-40-00	03	0539	& ON
PYLON ACCESS PANELS AND AIRSCOOP	54-50-00	01	0001	0538
ENGINE PYLON SKINS	54-50-00	02	0001	0538
ENGINE PYLON SKINS	54-50-00	03	0539	& ON
PYLON/NACELLE SEALS	54-60-00	01	0001	0538

© Cessna Aircraft Company

A15038

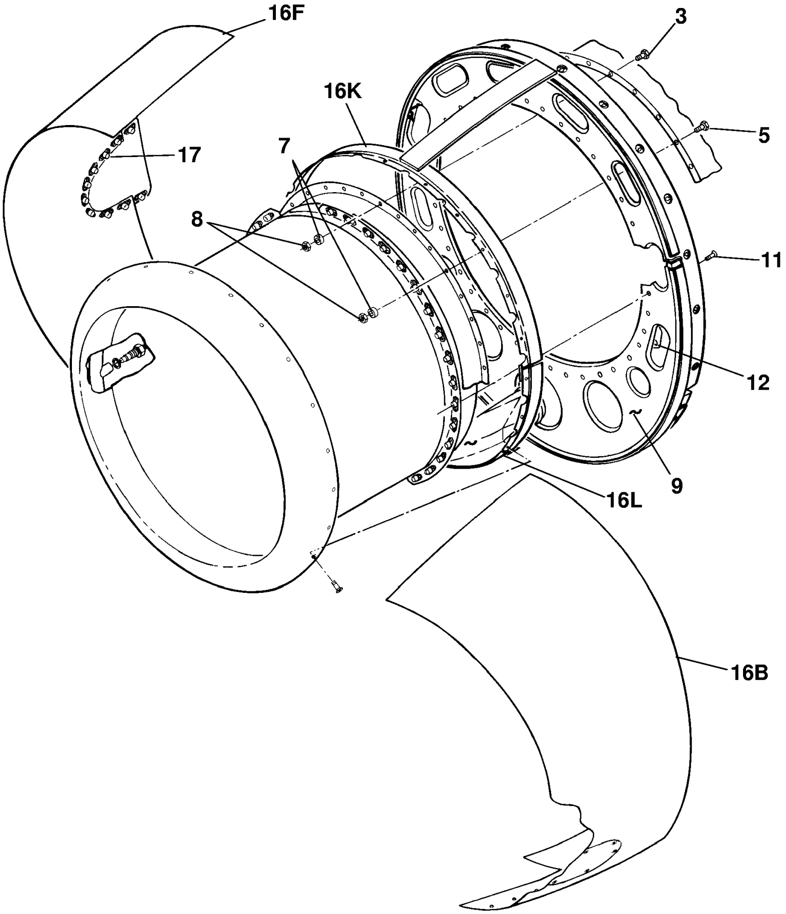

AIRPLANES -0001 THRU -0259
AIRPLANES -0260 THRU -0538
REFER TO SHEET 3

65543010B

ENGINE NACELLES
FIGURE 01 (SHEET 1)

FIG ITEM	PART NUMBER	NOMENCLATURE 1 2 3 4 5 6 7			UNITS PER ASSY
01					
-		ENGINE NACELLES	0001	0538	RF
- 1	5552200-63	. NACELLE ASSY-LH FORWARD FSO 5552200-67	0001	0031	NP
- 1A	DDA0089-3	. NACELLE ASSY-LH FORWARD REF 6552000 REFER TO NOTE 1	0032	0057	01 R
- 1B	5552200-67	. NACELLE ASSY-LH FORWARD	0058	0201	01
- 1C	5552200-77	. NACELLE ASSY-LH FORWARD	0202	0259	01
- 2	5552200-64	. NACELLE ASSY-RH FORWARD FSO 5552200-68	0001	0031	01
- 2A	DDA0089-4	. NACELLE ASSY-RH FORWARD REF 6552000 REFER TO NOTE 1	0032	0057	01 R
- 2B	5552200-68	. NACELLE ASSY-RH FORWARD	0058	0201	01
- 2C	5552200-78	. NACELLE ASSY-RH FORWARD	0202	0259	01
		ATTACHING PARTS			
3	AN4-5A	. BOLT-LH	0001	0259	10
- 4	AN4-5A	. BOLT-RH	0001	0259	07
5	AN4-4A	. BOLT-LH	0001	0259	02
- 6	AN4-4A	. BOLT-RH	0001	0259	05
7	NAS43HT4-4	. SPACER	0001	0259	12
- 7A	NAS1149F0463P	. WASHER ALT FOR NAS43HT4-4	0001	0259	12
8	MS21042-4	. NUT	0001	0259	12
		—*—			
9	5552210-17	. . BULKHEAD ASSY LH			01
- 10	5552210-18	. . BULKHEAD ASSY RH			01
11	MS27039-1-06	. . SCREW			12
12		. . BRACKET REFER TO 30-20 -00 FIGURE 01			RF
		ATTACHING PARTS			
- 13	MS27039-1-06	. . SCREW			02
- 14	MS21083N3	. . NUT			02
		—*—			
- 15	5552200-59	. . SKIN ASSY LH	0001	0201	01
- 15A	5552200-73	. . SKIN ASSY-LH	0202	0259	01
- 16	5552200-60	. . SKIN ASSY RH	0001	0201	01
- 16A	5552200-74	. . SKIN ASSY-RH	0202	0259	01
16B	5552200-55	. . . SKIN LH-LEFT ENGINE	0001	0201	01
- 16C	5552200-69	. . . SKIN LH-LEFT ENGINE	0202	0259	01
- 16D	5552200-56	. . . SKIN RH-RIGHT ENGINE	0001	0201	01
- 16E	5552200-70	. . . SKIN RH-RIGHT ENGINE	0202	0259	01
16F	5552200-61	. . . SKIN LH-LEFT ENGINE	0001	0201	01
- 16G	5552200-71	. . . SKIN LH-LEFT ENGINE	0202	0259	01
- 16H	5552200-62	. . . SKIN RH-RIGHT ENGINE	0001	0201	01
- 16J	5552200-72	. . . SKIN RH-RIGHT ENGINE	0202	0259	01
16K	5552200-19	. . . DOUBLER-UPPER			01
16L	5552200-57	. . . DOUBLER-LOWER			01
17	MS21059L08	. . NUTPLATE			10

NOTE 1—WHEN ORDERING DDA PART NUMBERS, ALSO PROVIDE REFERENCE DRAWING NUMBER SHOWN IN NOMENCLATURE. R

- ITEM NOT ILLUSTRATED

A15039

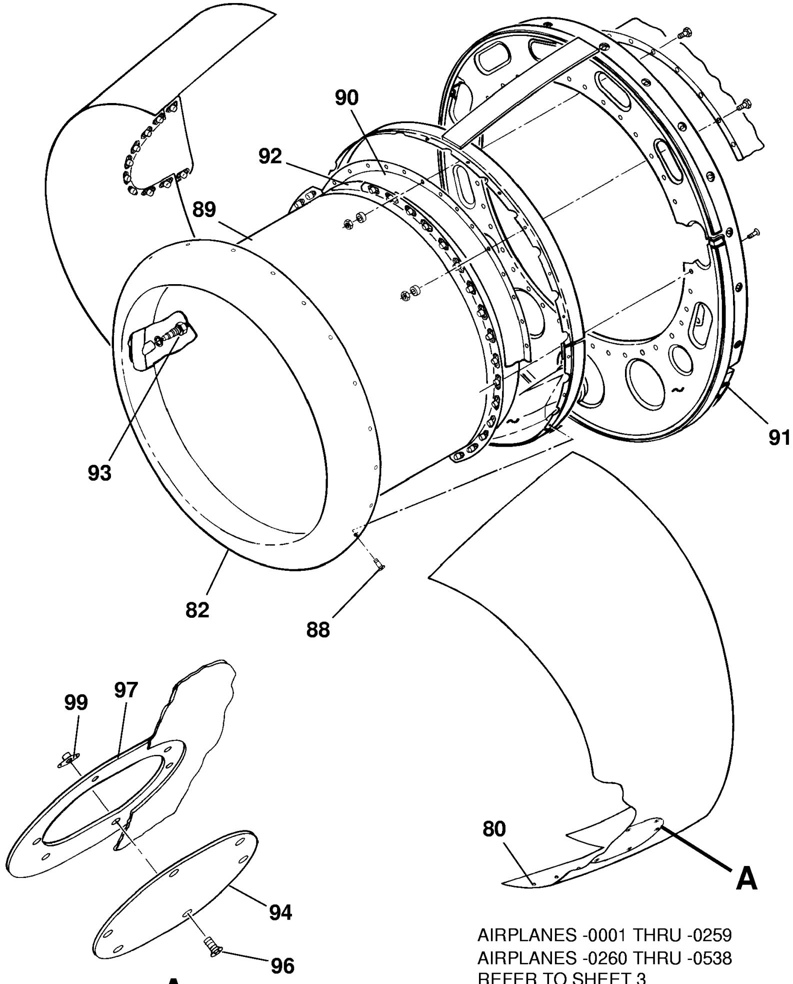

AIRPLANES -0001 THRU -0259
AIRPLANES -0260 THRU -0538
REFER TO SHEET 3

DETAIL A
AIRPLANES -0001 THRU -0259

65543010B
A56541005

ENGINE NACELLES
FIGURE 01 (SHEET 2)

FIG ITEM	PART NUMBER	NOMENCLATURE 1 2 3 4 5 6 7	EFFECTIVITY FROM	EFFECTIVITY TO	UNITS PER ASSY
01					
- 75	6452214-5	. . INLET DUCT ASSY-GENERATOR			02
		ATTACHING PARTS			
- 76	MS24694-S5	. . SCREW			14
		—*—			
- 77	6452214-2	. . . INLET DUCT			01
- 78	6452214-6	. . . DOUBLER ASSY			01
- 79	MS21059-3	. . . . NUTPLATE			01
80	MS21075-08N	. . . . NUTPLATE			14
- 81	MS21059-3	. . NUTPLATE-FORWARD			26
82	5552250-89	. . INLET ASSY LH-REFER TO NOTE 1 AND NOTE 3 FSO 5552250-119	0001	0239	NP
- 83	6552500-213	. . INLET ASSY-LH FSO 6552500-215 REFER TO NOTE 2	0001	0009	NP
			0011	0049	
			0051	0127	
			0129	0174	
			0176	0259	
- 83A	6552500-215	. . INLET ASSY-LH	0001	0009	01
			0011	0049	
			0051	0127	
			0129	0174	
			0176	0259	
- 84	5552250-119	. . INLET ASSY LH-REFER TO NOTE 1	0240	0259	01
- 85	5552250-90	. . INLET ASSY RH-REFER TO NOTE 1 AND NOTE 3 FSO 5552250-120	0001	0239	NP
- 86	6552500-212	. . INLET ASSY-RH FSO 6552500-214 REFER TO NOTE 2	0001	0009	NP
			0011	0049	
			0051	0127	
			0129	0174	
			0176	0259	
- 86A	6552500-214	. . INLET ASSY-RH	0001	0009	01
			0011	0049	
			0051	0127	
			0129	0174	
			0176	0259	
- 87	5552250-120	. . INLET ASSY RH-REFER TO NOTE 1	0240	0259	01
		ATTACHING PARTS			
88	MS24694-C49	. . SCREW			26
		—*—			
89	5552250-31	. . . BLANKET			01
90	6552251-2	. . ATTACH FLANGE FSO 6552251-201			NP
- 90A	6552251-201	. . ATTACH FLANGE FOR SPARES ONLY			01
91	244-16	. . RECEPTACLE V29372			16
92	5552250-73	. . BOSS ASSY-THERMOCOUPLE ASSY MOUNT	0001	0259	01
- 92A		. . DELETED-NOT USED			
93		. . SWITCH-AIR INLET ANTI-ICE REFER TO 30-20-00 FIGURE 01			RF
94	6552355-5	. . DOOR-NACELLE ACCESS LH			01
- 95	6552355-6	. . D00R-NACELLE ACCESS RH			01
96	MS24694-S4	. . SCREW			08
97	6552355-3	. . DOUBLER-ACCESS DOOR LH			01
- 98	6552355-4	. . DOUBLER-ACCESS DOOR RH			01
99	MS21049L08	. . NUTPLATE			08
- 100	6590276-12	. . BRACKET-REFER TO NOTE 2	0001	0009	02
			0011	0049	
			0051	0127	
			0129	0174	
			0176	0259	

NOTE 1—WHEN ORDERING 5552250-89 OR 5552250-90 ALSO ORDER 6552251-2.

NOTE 2—AIRPLANES -0001 THRU -0009, -0011 THRU -0049, -0051 THRU -0127, -0129 THRU -0174, AND -0176 THRU -0259 INCORPORATING SB560-54-01.

NOTE 3—AIRPLANES -0001 THRU -0239 NOT INCORPORATING SB560-54-01.

- ITEM NOT ILLUSTRATED

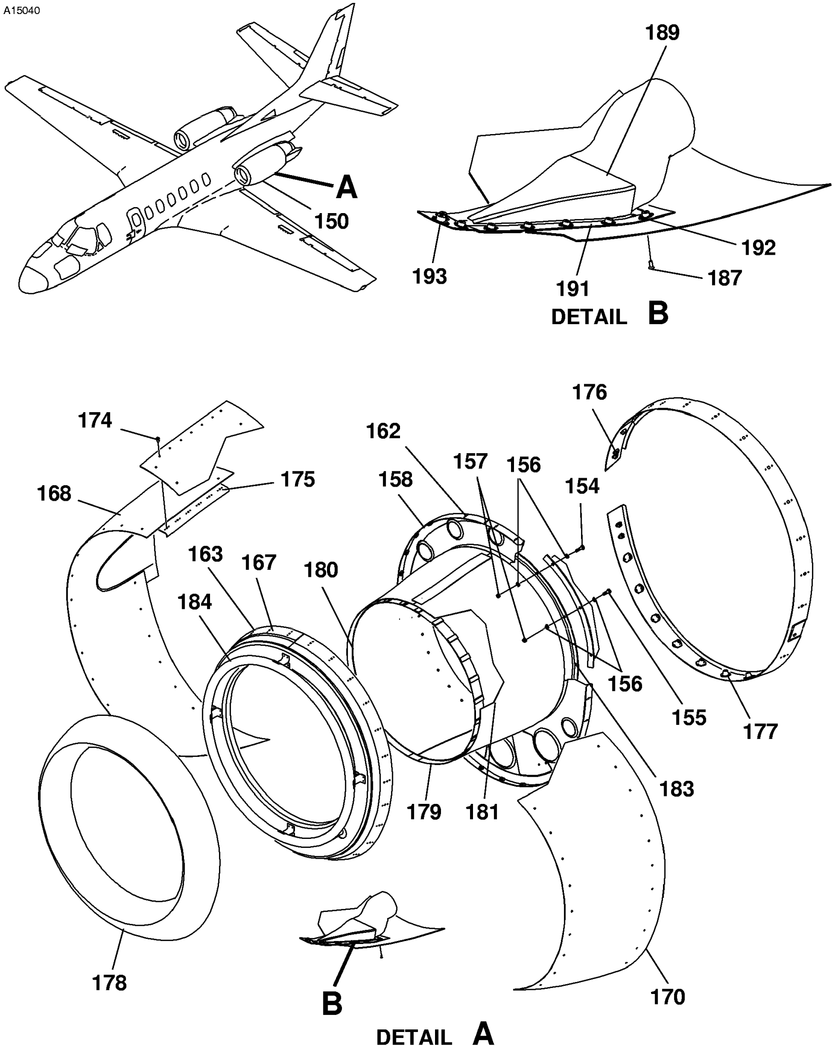

AIRPLANES -0260 THRU -0538

ENGINE NACELLES
FIGURE 01 (SHEET 3)

FIG ITEM	PART NUMBER	NOMENCLATURE 1 2 3 4 5 6 7			UNITS PER ASSY
01					
150	6552500-1	. NACELLE INLET ASSY-LH-FSO 6552500-211	0260	0489	NP
- 151	6552500-9	. NACELLE INLET ASSY-LH-FSO 6552500-211	0490	0512	NP
- 151A	6552500-11	. NACELLE INLET ASSY-LH-FSO 6552500-211	0513	0534	01
- 151B	6552500-13	. NACELLE INLET ASSY-LH-FSO 6552500-211	0535	0538	01
- 151C	6552500-211	. NACELLE INLET ASSY-LH-REFER TO NOTE 1	0260	0538	01
- 152	6552500-2	. NACELLE INLET ASSY-RH-FSO 6552500-210	0260	0489	NP
- 153	6552500-10	. NACELLE INLET ASSY-RH-FSO 6552500-210	0490	0512	NP
- 153A	6552500-12	. NACELLE INLET ASSY-RH-FSO 6552500-210	0513	0534	01
- 153B	6552500-14	. NACELLE INLET ASSY-RH-FSO 6552500-210	0535	0538	01
- 153C	6552500-210	. NACELLE INLET ASSY-RH-REFER TO NOTE 1	0260	0538	01
		ATTACHING PARTS			
154	AN4-6A	. BOLT-LH AND RH			07
155	AN4-7A	. BOLT-LH AND RH			05
156	NAS1149C0416R	. WASHER			24
157	MS21042-4	. NUT			12
		—*—			
158	6552504-1	. . BULKHEAD ASSY-AFT LH	0260	0347	01
- 159	6552504-12	. . BULKHEAD ASSY-AFT RH	0260	0347	01
- 160	6552504-13	. . BULKHEAD ASSY-AFT LH	0348	0538	01
- 161	6552504-14	. . BULKHEAD ASSY-AFT RH	0348	0538	01
162	MS21050L3	. . . NUTPLATE			30
163	6552503-10	. . BULKHEAD ASSY-FORWARD LH	0260	0388	01
- 164	6552503-2	. . BULKHEAD ASSY-FORWARD RH	0260	0388	01
- 165	6552503-7	. . BULKHEAD ASSY-FORWARD LH-FSO 6552503-11	0389	0460	NP
- 165A	6552503-11	. . BULKHEAD ASSY-FORWARD LH	0461	0538	01
- 166	6552503-8	. . BULKHEAD ASSY-FORWARD RH-FSO 6552503-12	0389	0460	NP
- 166A	6552503-12	. . BULKHEAD ASSY-FORWARD RH	0461	0538	01
167	MS21047L3	. . . NUTPLATE			27
168	6552507-3	. . SKIN ASSY-INBOARD LH			01
- 169	6552507-4	. . SKIN ASSY-INBOARD RH			01
170	6552507-15	. . SKIN ASSY-OUTBOARD LH	0260	0347	01
- 171	6552507-16	. . SKIN ASSY-OUTBOARD RH	0260	0347	01
- 172	6552507-31	. . SKIN ASSY-OUTBOARD LH	0348	0538	01
- 173	6552507-32	. . SKIN ASSY-OUTBOARD RH	0348	0538	01
		ATTACHING PARTS			
174	MS24694-S5	. . SCREW			69
		—*—			
175	MS21050L3	. . . NUTPLATE-INBOARD SKIN			12
176	MS21059L3	. . . NUTPLATE-INBOARD SKIN			09
177	S2319-50	. . RECEPTACLE			18
178	6552505-1	. . NOSE CAP-LH AND RH			01
179	6552500-7	. . RING HALF-LH AND RH			02
180	6552506-1	. . INNER DUCT-LH AND RH			01
181	6552506-2	. . OUTER DUCT-LH AND RH	0260 0513	0489 0538	01
- 182	6552506-8	. . OUTER DUCT-LH AND RH	0490 0535	0512 0538	01
183	6552501-1	. . FLANGE-ATTACH LH AND RH			01
184		. . DEICE SYSTEM-PNEUMATIC REFER TO 30-20-00 FIGURE 01			RF
- 185	6452214-5	. . INLET DUCT ASSY-LH AND RH	0260	0337	01
- 186	6452214-9	. . INLET DUCT ASSY-LH AND RH	0338	0538	01
		ATTACHING PARTS			
187	MS24694-S5	. . SCREW			15
		—*—			
- 188	6452214-2	. . . INLET DUCT	0260	0337	01
189	6452214-8	. . . INLET DUCT	0338	0538	01
- 190	6452214-6	. . . DOUBLER ASSY	0260	0337	01
191	6452214-11	. . . DOUBLER ASSY	0338	0538	01
192	MS21075-08N	. . . . NUTPLATE			14
193	MS21075-3N	. . . . NUTPLATE			01

NOTE 1—AIRPLANES -0260 THRU -0538 INCORPORATING SB560-54-04.

- ITEM NOT ILLUSTRATED

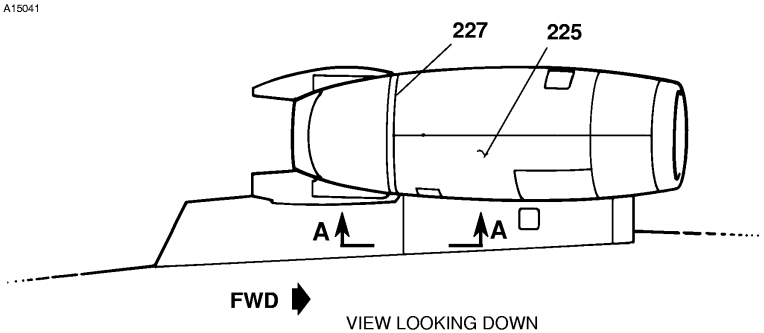

VIEW LOOKING DOWN

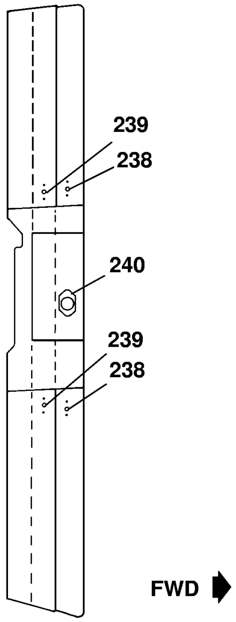

VIEW A-A

LOOKING OUTBOARD

56541004
AA56541002

ENGINE NACELLES
FIGURE 01 (SHEET 4)

FIG ITEM	PART NUMBER	NOMENCLATURE 1 2 3 4 5 6 7			UNITS PER ASSY
01					
225		. NACELLE-UPPER INBOARD CENTER-REFER TO 71-10-00 FIGURE 01			RF
- 226		. NACELLE-LOWER INBOARD CENTER-REFER TO 71-10-00 FIGURE 01			RF
227	5552350-129	. NACELLE ASSY-AFT LH ENGINE WITH THRUST REVERSERS	0001	0095	01
- 228	5552350-401	. NACELLE ASSY-AFT LH ENGINE WITH THRUST REVERSERS	0096	0201	01
- 229	5552350-433	. NACELLE ASSY-AFT LH ENGINE WITH THRUST REVERSERS-FSO 552350-437	0202	0202	NP
- 230	5552350-437	. NACELLE ASSY-AFT LH ENGINE WITH THRUST REVERSERS-FSO 552350-443	0203	0416	NP
- 231	5552350-443	. NACELLE ASSY-AFT LH ENGINE WITH THRUST REVERSERS	0417	0538	01
- 232	5552350-130	. NACELLE ASSY-AFT RH ENGINE WITH THRUST REVERSERS	0001	0095	01
- 233	5552350-402	. NACELLE ASSY-AFT RH ENGINE WITH THRUST REVERSERS	0096	0201	01
- 234	5552350-434	. NACELLE ASSY-AFT RH ENGINE WITH THRUST REVERSERS-FSO 5552350-438	0202	0202	NP
- 235	5552350-438	. NACELLE ASSY-AFT RH ENGINE WITH THRUST REVERSERS-FSO 5552350-444	0203	0416	NP
- 236	5552350-444	. NACELLE ASSY-AFT RH ENGINE WITH THRUST REVERSERS . . . . ATTACHING PARTS	0417	0538	01
- 237	MS24694-S49	. SCREW . . . . —*—			04
238	MS21047L3	. . NUTPLATE			07
239	MS21059L08	. . NUTPLATE			02
240	S2319-50	. . RECEPTACLE			16

- ITEM NOT ILLUSTRATED

A27514

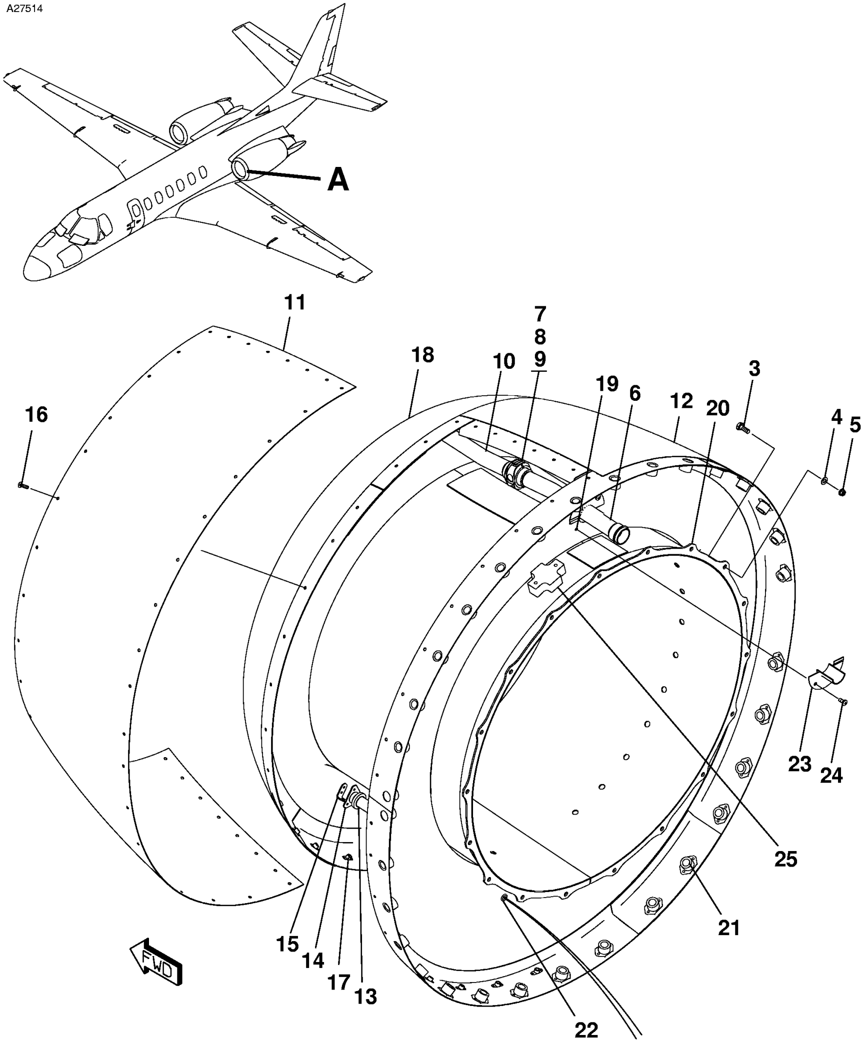

5610T1049
A5652T1005

ENGINE NACELLES
FIGURE 02 (SHEET 1)

FIG ITEM	PART NUMBER	NOMENCLATURE 1 2 3 4 5 6 7				UNITS PER ASSY	
02							
-		ENGINE NACELLES		0539	& ON	RF	
- 1	6552700-3	. INLET ASSY LH FSO 6552700-9		0539	0571	NP	
- 1A	6552700-5	. INLET ASSY LH FSO 6552700-9		0572	0572	NP	
- 1B	6552700-7	. INLET ASSY LH FSO 6552700-9		0573	0655	NP	
- 1C	6552700-9	. INLET ASSY LH		0656	0751	01	
- 1D	6552800-1	. INLET ASSY LH FSO 6552800-3		0752	0806	NP	
- 1E	6552800-3	. INLET ASSY LH		0807	& ON	01	
- 2	6552700-4	. INLET ASSY RH FSO 6552700-10		0539	0571	NP	
- 2A	6552700-6	. INLET ASSY RH FSO 6552700-10		0572	0572	NP	
- 2B	6552700-8	. INLET ASSY RH FSO 6552700-10		0573	0655	NP	
- 2C	6552700-10	. INLET ASSY RH		0656	0751	01	
- 2D	6552800-2	. INLET ASSY RH FSO 6552800-4		0752	0806	NP	
- 2E	6552800-4	. INLET ASSY RH		0807	& ON	01	
		ATTACHING PARTS					
3	AN4-5A	. BOLT				18	
4	NAS1149F0432P	. WASHER				18	
5	MS21042-4	. NUT				18	
		—*—					
6	6552607-4	. . AFT SUPPLY TUBE				01	
7	W908F16C	. . BODY-TUBE CONNECT	V79326			01	
8	W932-16E	. . SEAL ASSY	V79326			01	
9	W994-16CE	. . HALF COUPLING	V79326			02	
10	6552607-1	. . PICCOLO TUBE ASSY-NACELLE INLET				01	
11	6552606-1	. . OUTER SKIN LH-NACELLE INLET				01	
12	6552606-2	. . OUTER SKIN RH-NACELLE INLET				01	
13		. . SWITCH-TEMPERATURE MONITOR ANTI-ICE INLET REFER TO 30-20-00 FIGURE 02				RF	
14	6252019-10	. . SUPPORT-TEMPERATURE SWITCH				01	
15	AN743-13	. . BRACKET				01	
16	NAS1581F3R2	. . SCREW				AR	
17	MS21070L3	. . NUTPLATE				AR	
18	6552601-5	. . NOSECAP-NACELLE INLET		0539	0572	01	
- 18B	6552601-6	. . NOSE CAP-NACELLE INLET ALT FOR 6552601-5		0573	& ON	01	
19	MS21059L3K	. . NUTPLATE				04	
20	6552602-2	. . ATTACH FLANGE-NACELLE INLET FSO 6552602-200		0539	0806	NP	
- 20A	6552602-3	. . ATTACH FLANGE-NACELLE INLET FSO 6552602-200		0807	& ON	NP	
- 20B	6552602-200	. . ATTACH FLANGE-NACELLE INLET REFER TO NOTE 1		0807	& ON	01	
- 20C	6552700-201	. . INLET ASSY LH-FOR SPARES ONLY		0539	0707	01	R
- 20D	6552700-202	. . INLET ASSY RH-FOR SPARES ONLY		0539	0707	01	R
		ATTACHING PARTS					
- 20E	HL41-5-2	. . PIN-HI-LOK USED WHEN 6552602-2 IS INSTALLED	V73197			50	
- 20F	HL41-5-3	. . PIN-HI-LOK USED WHEN 6552602-3 OR 6552602-200 IS INSTALLED	V73197			50	
- 20G	HL70-5	. . COLLAR-HI-LOK	V73197			50	
		—*—					
21	S2319-53	. . RECEPTACLE		0539 0752	0655 & ON	32	
- 21A	S2319-51	. . RECEPTACLE		0656	0751	32	
22	NAS557-3A	. . GROMMET				01	
23	6552604-15	. . CLOSEOUT ASSY-NACELLE INLET TUBE				01	
		ATTACHING PARTS					
24	MS27039C1-06	. . SCREW				04	
		—*—					
25	6552608-7	. . ITT T1 PROBE MOUNT		0539	0751	01	
- 25B	6552608-5	. . FCU T1 PROBE MOUNT		0539	0571	01	
- 25C	6552608-9	. . FCU T1 PROBE MOUNT		0572	0751	01	
- 25D	6552708-3	. . PROBE MOUNT		0752	& ON	01	

NOTE 1—AIRPLANES -0807 AND ON AND AIRPLANES -0539 THRU -0806 INCORPORATING SB560-71-08.

- ITEM NOT ILLUSTRATED

A15045

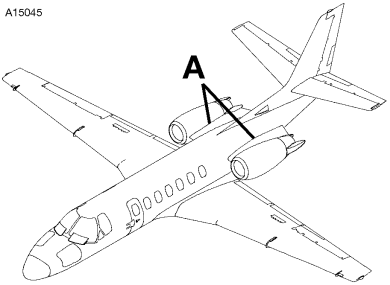

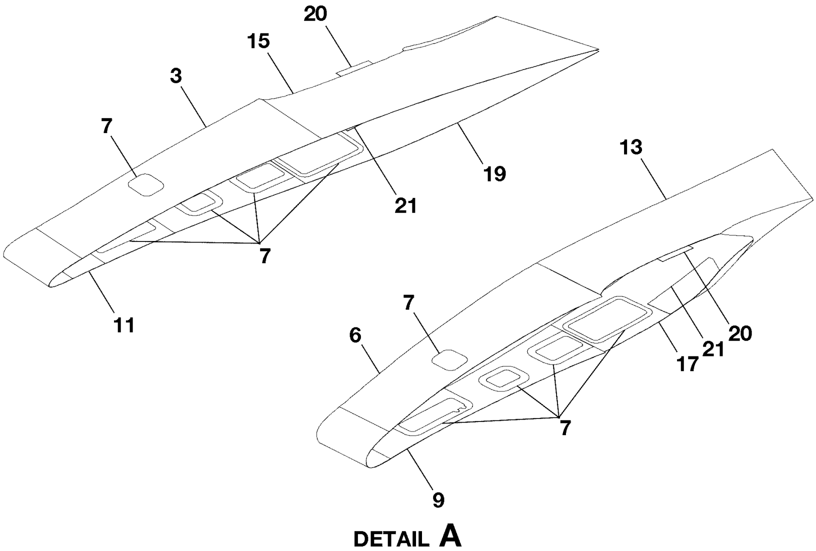

5610T1049
A5654T1009

ENGINE PYLON SKINS
FIGURE 02 (SHEET 1)

FIG ITEM	PART NUMBER	NOMENCLATURE 1 2 3 4 5 6 7			UNITS PER ASSY
02					
-		ENGINE PYLON SKINS	0001	0538	RF
- 1	6612050-29	. SKIN-LH UPPER CENTER	0001	0201	01 R
- 2	6612050-231	. SKIN-LH UPPER CENTER	0202	0215	01 R
3	6612050-245	. SKIN-LH UPPER CENTER	0216	0538	01 R
- 4	6612050-30	. SKIN-RH UPPER CENTER	0001	0201	01 R
- 5	6612050-232	. SKIN-RH UPPER CENTER	0202	0215	01 R
6	6612050-244	. SKIN-RH UPPER CENTER	0216	0538	01 R
7		. DOOR ASSY-REFER TO 54-50-00 FIGURE 01			RF
- 8	6612050-31	. SKIN-LH LOWER CENTER	0001	0201	01
9	6612050-233	. SKIN-LH LOWER CENTER	0202	0538	01
- 10	6612050-32	. SKIN-RH LOWER CENTER	0001	0201	01
11	6612050-234	. SKIN-RH LOWER CENTER	0202	0538	01
- 12	6612050-115	. SKIN-LH UPPER AFT	0001	0201	01
13	6612050-235	. SKIN-LH UPPER AFT	0202	0538	01
- 14	6612050-114	. SKIN-RH UPPER AFT	0001	0201	01
15	6612050-236	. SKIN-RH UPPER AFT	0202	0538	01
- 16	6612050-117	. SKIN-LH LOWER AFT	0001	0201	01
17	6612050-237	. SKIN-LH LOWER AFT	0202	0538	01
- 18	6612050-116	. SKIN-RH LOWER AFT	0001	0201	01
19	6612050-238	. SKIN-RH LOWER AFT	0202	0538	01
20	6612050-110	. SKIN-LH AND RH INNER UPPER			02
21	6612050-111	. SKIN-LH AND RH INNER LOWER			02

- ITEM NOT ILLUSTRATED

CHAPTER SECTION SUBJECT		NUMBER OF PAGES	DATE
55 - TITLE			
55 - LIST OF EFFECTIVE PAGES			
55 - RECORD OF TEMPORARY REVISIONS			
55 - TABLE OF CONTENTS			
55-10-00	Figure 01	4	Mar 1/2010
55-10-00	Figure 02	6	Feb 1/2009
55-10-00	Figure 02A	2	Mar 1/2010
55-10-00	Figure 03	2	Feb 1/2009
55-10-00	Figure 04	2	Feb 1/2009
55-20-00	Figure 01	6	Mar 1/2011
55-30-00	Figure 01	6	Aug 1/2015
55-30-00	Figure 01A	2	Mar 1/2010
55-30-00	Figure 02	4	Mar 1/2010
55-30-00	Figure 03	4	Mar 1/2011
55-40-00	Figure 01	6	Mar 1/2011
55-40-00	Figure 02	4	Aug 1/2013
55-40-00	Figure 03	4	Aug 1/2015
55-40-00	Figure 04	2	Aug 1/2015

© Cessna Aircraft Company

SUBJECT	CHAPTER SECTION SUBJECT	FIGURE	EFFECTIVITY START	EFFECTIVITY END
HORIZONTAL STABILIZER INSTALLATION	55-10-00	01		
HORIZONTAL STABILIZER RIBS AND SPARS	55-10-00	02		
HORIZONTAL STABILIZER - FRENCH AND DUTCH CERTIFIED AIRPLANES	55-10-00	02A	0058	0538
HORIZONTAL STABILIZER STRINGERS AND SUPPORTS	55-10-00	03		
HORIZONTAL STABILIZER SKINS AND DOUBLERS	55-10-00	04		
ELEVATOR INSTALLATION	55-20-00	01		
VERTICAL FIN INSTALLATION	55-30-00	01	0001	0538
VERTICAL FIN INSTALLATION - FRENCH AND DUTCH CERTIFIED AIRPLANES	55-30-00	01A	0001	0538
VERTICAL FIN - ACCESS PANELS AND SUPPORTS	55-30-00	02	0001	0538
VERTICAL FIN INSTALLATION	55-30-00	03	0539	& ON
RUDDER INSTALLATION	55-40-00	01	0001	0538
RUDDER TIP ASSEMBLY, SKINS AND TRIM TAB	55-40-00	02	0001	0538
RUDDER INSTALLATION	55-40-00	03	0539	& ON
RUDDER TIP ASSEMBLY, SKINS AND TRIM TAB	55-40-00	04	0539	& ON

© Cessna Aircraft Company

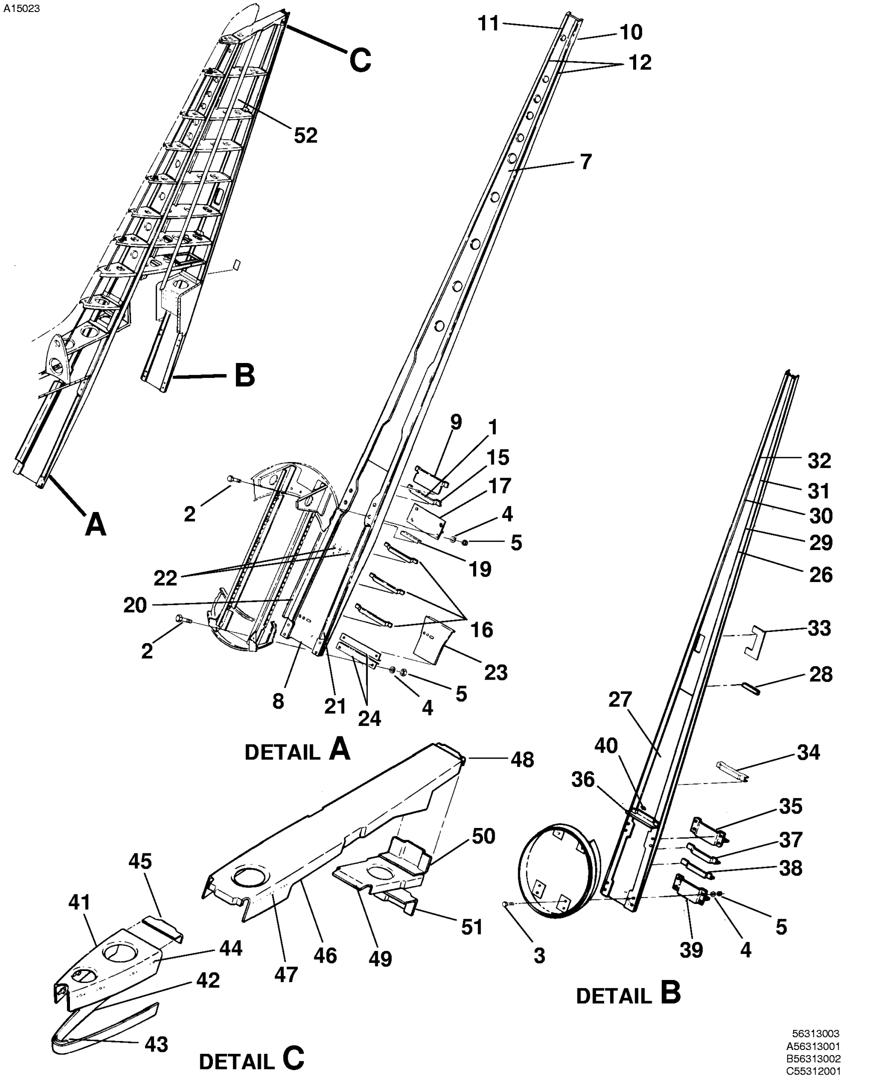

VERTICAL FIN INSTALLATION
FIGURE 01 (SHEET 1)

FIG ITEM	PART NUMBER	NOMENCLATURE 1 2 3 4 5 6 7			UNITS PER ASSY
01					
-		VERTICAL FIN INSTALLATION	0001	0538	RF
1	S1050-3	. GROMMET 3.00 INCHES LONG BKI REFER TO NOTE 1	0268	0538	AR
- 1A	6531000-2	. VERTICAL FIN ASSY FSO 6531000-200	0001	0137	NP
- 1B	6531000-12	. VERTICAL FIN ASSY FSO 6531000-200	0138	0538	NP
- 1C	6531000-200	. VERTICAL FIN ASSY			01
		ATTACHING PARTS			
2	NAS464P6LA11	. BOLT-FORWARD SPAR			08
3	NAS464P6LA8	. BOLT-AFT SPAR			08
4	NAS1149F0632P	. WASHER			16
5	MS21042L6	. NUT			16
		—*—			
- 6	6531003-2	. . SPAR ASSY-FORWARD			01
7	5531016-8	. . . WEB-UPPER			01
8	6431016-8	. . . WEB LOWER			01
9	5531016-14	. . . SPLICE			01
10	5531016-4	. . . CAP-LH			01
11	5531016-3	. . . CAP-RH			01
12	5531016-7	. . . STRAP UPPER			02
- 13	6531003-3	. . . STRAP LOWER			02
- 14	6531003-4	. . . STRAP			02
15	5531016-9	. . . STIFFENER	0001	0485	01
- 15A	6431016-28	. . . STIFFENER	0486	0538	01
16	5531016-10	. . . STIFFENER			03
17	6431016-10	. . . TEE	0001	0485	01
- 17A	6431016-27	. . . TEE	0486	0538	01
- 18	6431016-9	. . . FILLER			01
19	6565440-37	. . . MOUNT ANGLE			01
20	6531003-6	. . . ANGLE-RH			01
21	6531003-5	. . . ANGLE-LH			01
22	MS21075L3N	. . . NUTPLATE			03
23	6431016-12	. . . DOUBLER			01
24	6431016-11	. . . STIFFENER			02
- 24A	DDA0141-2	. . . FILLER-STIFFNER REINFORCEMENT REF 6531000 REFER TO NOTE 2	0105	0105	01 R
- 24B	NAS464-6LA8	. . . BOLT-FILLER ATTACH	0105	0105	02
- 24C	NAS1149F0632P	. . . WASHER-FILLER ATTACH	0105	0105	02
- 24D	MS21042L6	. . . NUT-FILLER ATTACH	0105	0105	02
- 25	6531004-2	. . ASSY-AFT SPAR			01
26	5531018-14	. . . WEB-UPPER			01
27	5531018-17	. . . WEB-LOWER			01
28	5531018-13	. . . SPLICE PLATE			01
29	5531018-3	. . . SPAR CAP-LH			01
30	5531018-4	. . . SPAR CAP-RH			01
31	5531018-5	. . . STRAP-LH			01
32	5531018-6	. . . STRAP-RH			01
33	6531004-3	. . . DOUBLER			01
34	6531004-4	. . . STIFFENER			01
35	5531018-12	. . . TEE			01
36	5531018-10	. . . STIFFENER	0001	0109	01
- 36A	5531018-18	. . . STIFFENER	0110	0538	01
37	5531018-9	. . . STIFFENER			01
38	5531018-8	. . . STIFFENER			01
39	5531018-11	. . . TEE			01
40	MS21069L06	. . . NUTPLATE			01
41	5531019-21	. . RIB ASSY			01
42	5531019-82	. . . STRAP			01
43	5531019-81	. . . DOUBLER			01
44	MS21069L08	. . . NUTPLATE			08
45	5531019-37	. . ANGLE			01
46	5531019-2	. . RIB ASSY			01
47	MS21069L08	. . . NUTPLATE			05
- 47A	MS21073L08	. . NUTPLATE			01
48	5531019-56	. . ANGLE			01
- 48A	MS21073L08	. . . NUTPLATE			01
49	5531019-5	. . RIB			01
50	5531019-45	. . ANGLE			01
51	5531019-53	. . ANGLE			01
52	6531000-7	. . STIFFENER-LH			01
- 53	6531000-8	. . STIFFENER-RH			01

NOTE 1—AIRPLANES -0268 THRU -0538 AND -0001 THRU -0267 INCORPORATING SB560-35-04.

NOTE 2—WHEN ORDERING DDA PART NUMBERS, ALSO PROVIDE REFERENCE DRAWING NUMBER SHOWN IN NOMENCLATURE. R

- ITEM NOT ILLUSTRATED

A15025

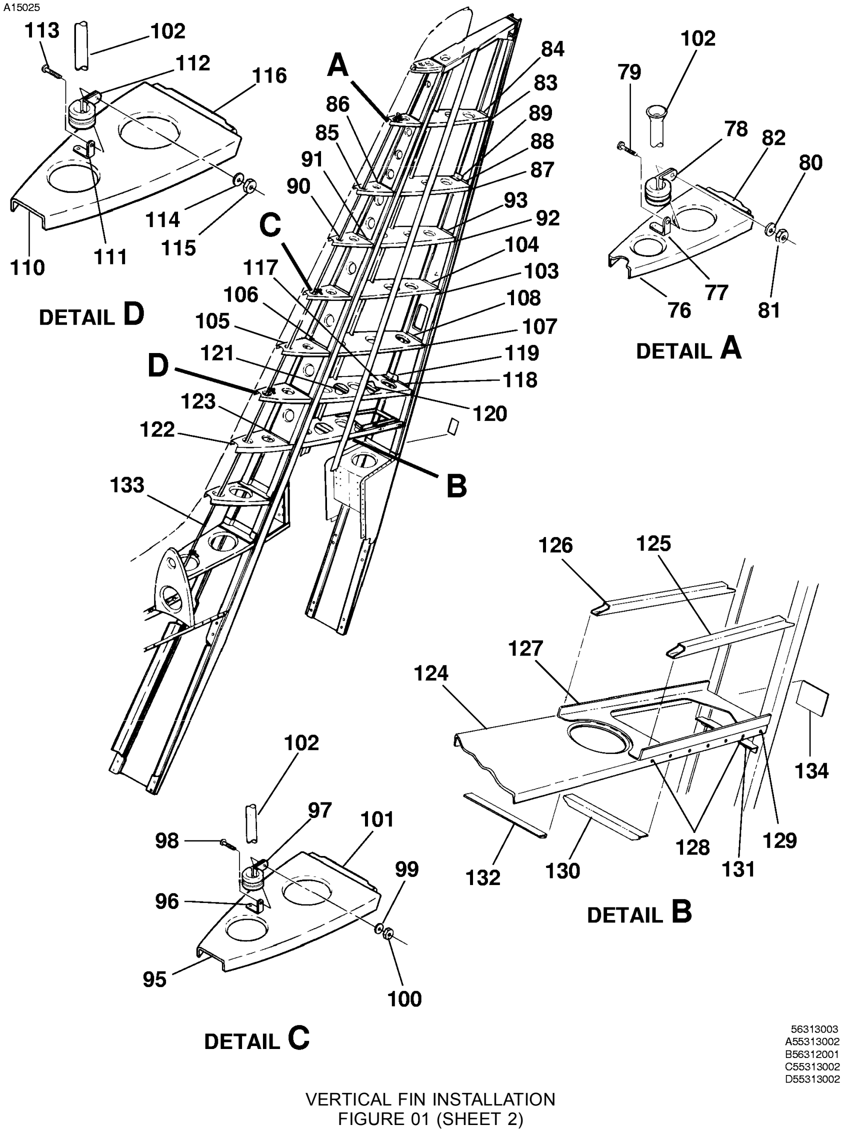

VERTICAL FIN INSTALLATION
FIGURE 01 (SHEET 2)

FIG ITEM	PART NUMBER	NOMENCLATURE 1 2 3 4 5 6 7			UNITS PER ASSY	
01						
- 75	5531019-75	. . RIB ASSY			01	
76	5531019-24	. . . RIB			01	
77	AN743-13	. . . BRACKET			01	
78	MS9024-15	. . . CLAMP			01	
		ATTACHING PARTS				
79	NAS603-8	. . . SCREW			01	
80	NAS1149D0316H	. . . WASHER			01	
81	MS21044N3	. . . NUT			01	
		—*—				
82	5531019-38	. . ANGLE			01	
83	5531019-182	. . RIB	0001	0259	01	
- 83A	5531019-186	. . RIB	0260	0538	01	
84	5531019-46	. . ANGLE			01	
85	5531019-26	. . RIB			01	
86	5531019-39	. . ANGLE			01	
87	5531019-180	. . RIB	0001	0259	01	
- 87A	5531019-188	. . RIB	0260	0538	01	
88	5531019-47	. . ANGLE			01	
89	5531019-54	. . ANGLE			01	
90	5531019-28	. . RIB			01	
91	5531019-40	. . ANGLE			01	
92	5531019-178	. . RIB	0001	0259	01	
- 92A	5531019-190	. . RIB	0260	0538	01	
93	5531019-48	. . ANGLE			01	
- 94	5531019-65	. . RIB ASSY			01	
95	5531019-30	. . . RIB			01	
96	AN743-13	. . . BRACKET			01	
97	MS9024-15	. . . CLAMP			01	
98	NAS603-8	. . . SCREW			01	
99	NAS1149D0316H	. . . WASHER			01	
100	MS21044N3	. . . NUT			01	
101	5531019-41	. . ANGLE			01	
102	5531015-19	. . CONDUIT			01	
103	5531019-177	. . RIB			01	
104	5531019-159	. . ANGLE			01	
105	5531019-32	. . RIB			01	
106	5531019-42	. . ANGLE			01	
107	5531019-168	. . RIB			01	
108	5531019-50	. . ANGLE			01	
- 109	5531019-66	. . RIB ASSY			01	
110	5531019-34	. . . RIB			01	
111	AN743-13	. . . BRACKET			01	
112	MS9024-15	. . . CLAMP			01	
113	NAS603-8	. . . SCREW			01	
114	NAS1149D0316H	. . . WASHER			01	
115	MS21044N3	. . . NUT			01	
116	5531019-43	. . ANGLE			01	
117	5531019-170	. . RIB			01	
118	5531019-51	. . ANGLE			01	
119	5531019-55	. . ANGLE			01	
120	5531019-59	. . ANGLE			01	
121	5531019-61	. . ANGLE			01	
122	DDA0061-3	. . RIB REF 6531003 REFER TO NOTE 2	0001	0051	01	R
- 122A	DDA0061-2	. . FILLER-RIB REF 6531003 REFER TO NOTE 2	0001	0051	01	R
- 122B	5531019-166	. . RIB	0052	0538	01	
123	5531019-44	. . ANGLE			01	
- 123A	6531003-7	. . SPACER	0052	0538	01	
124	5531019-161	. . RIB ASSY	0001	0195	01	
- 124A	5531019-173	. . RIB ASSY	0196	0538	01	
125	5531019-163	. . . STIFFENER-LH			01	
126	5531019-164	. . . STIFFENER-RH			01	
127	5531019-165	. . . DOUBLER			01	
128	MS21049L08	. . . NUTPLATE			12	
129	MS21053L08	. . . NUTPLATE			02	
130	5531019-78	. . . ANGLE			01	
131	5531019-52	. . ANGLE			01	
132	5531019-60	. . ANGLE			01	
133	5531015-20	. . CONDUIT			01	
134	MS27253-1	. . PLATE-IDENTIFICATION FSO S4053-1 OR S2674-3			NP	
- 134A	S4053-1	. . PLATE-IDENTIFICATION FOR SPARES ONLY REFER TO NOTE 1			01	
- 134B	S2674-3	. . PLATE-IDENTIFICATION FOR SPARES ONLY			01	

NOTE 1—PERMISSIBLE TO USE REMAINING STOCK OF MS27253-1

NOTE 2—WHEN ORDERING DDA PART NUMBERS, ALSO PROVIDE REFERENCE DRAWING NUMBER SHOWN IN NOMENCLATURE. R

- ITEM NOT ILLUSTRATED

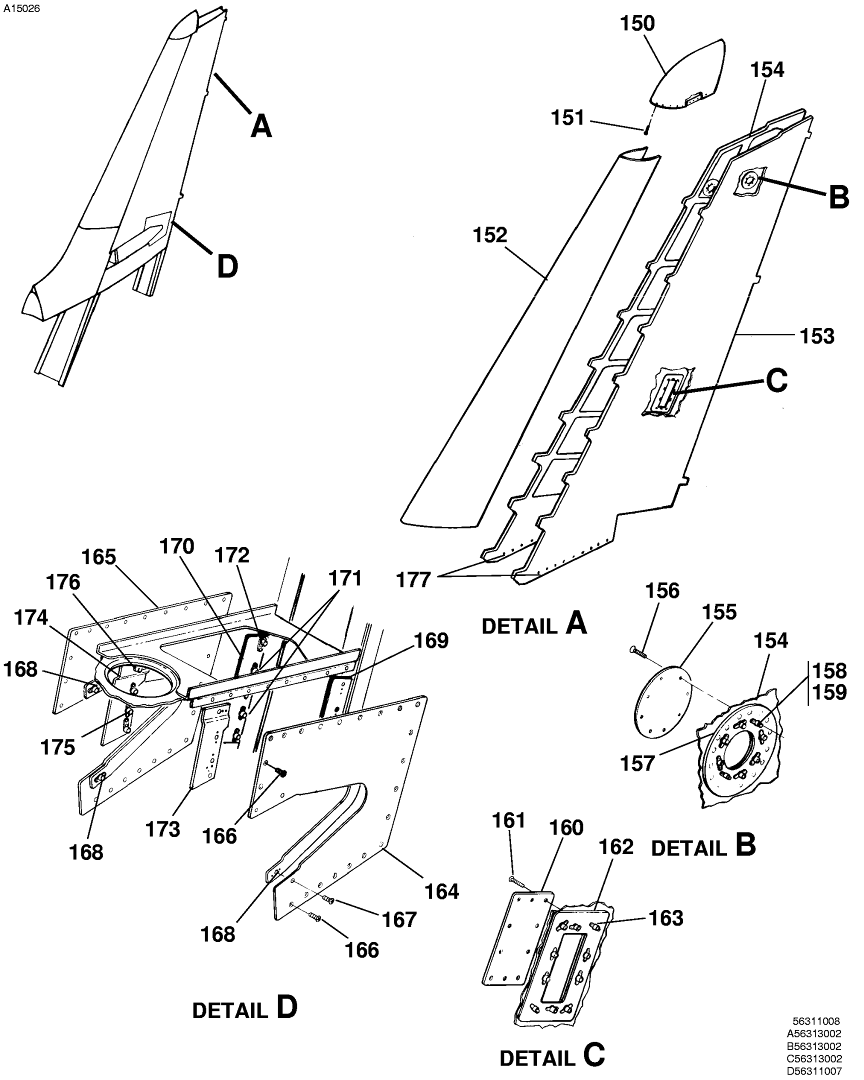

VERTICAL FIN INSTALLATION
FIGURE 01 (SHEET 3)

FIG ITEM	PART NUMBER	NOMENCLATURE 1 2 3 4 5 6 7			UNITS PER ASSY
01					
150		. . ANTENNA-VHF22A REFER TO 23-10-04 FIGURE 01			RF
		ATTACHING PARTS			
151	MS24694-S4	. . SCREW			14
		—*—			
152	5531015-11	. . SKIN-LEADING EDGE FSO 5531015-67	0001	0137	01
- 152A	5531015-67	. . SKIN-LEADING EDGE	0138	0538	NP
- 152B		. . SKIN-LEADING EDGE FRENCH CERTIFIED AIRPLANES REFER TO 55-30-00 FIGURE 01A	0058	0092	RF
153	6531000-3	. . SKIN BOND ASSY-LH FSO 6531000-13	0001	0137	NP
- 153A	6531000-13	. . SKIN BOND ASSY LH	0138	0368	01
- 153B	6531000-19	. . SKIN BOND ASSY LH	0369	0538	01
154	6531000-4	. . SKIN BOND ASSY-RH FSO 6531000-14	0001	0137	NP
- 154A	6531000-14	. . SKIN BOND ASSY RH	0138	0368	01
- 154B	6531000-20	. . SKIN BOND ASSY RH	0369	0538	01
155	5531005-3	. . DOOR-COVER ACCESS			02
		ATTACHING PARTS			
156	MS24693-S272	. . SCREW			08
		—*—			
157	5531005-8	. . DOUBLER ASSY			02
158	MS21059L3	. . . NUTPLATE			08
159	NAS500WDD8	. . . SHIM			08
160	5531005-10	. . COVER-ACCESS			01
		ATTACHING PARTS			
161	MS24693-S272	. . SCREW			10
		—*—			
162	5531005-11	. . DOUBLER ASSY			01
163	MS21049L3	. . . NUTPLATE			10
164	6531017-3	. DOOR ASSY LH-VERTICAL FIN			01
165	6531017-4	. DOOR ASSY RH-VERTICAL FIN			01
		ATTACHING PARTS			
166	MS24693-S48	. SCREW			22
167		. SCREW REFER TO 55-10-00 FIGURE 04			RF
		—*—			
168	MS21059L08	. . NUTPLATE			02
169	6531017-5	. DOUBLER ASSY LH			01
170	6531017-6	. DOUBLER ASSY RH			01
171	MS21049L08	. . NUTPLATE			04
172	MS21053L08	. . NUTPLATE			02
173	5531035-31	. SPLICE ASSY LH			01
174	5531035-32	. SPLICE ASSY RH			01
175	MS21049L08	. . NUTPLATE			03
176	MS21053L08	. NUTPLATE			02
177	MS21059L08	. NUTPLATE			22

- ITEM NOT ILLUSTRATED

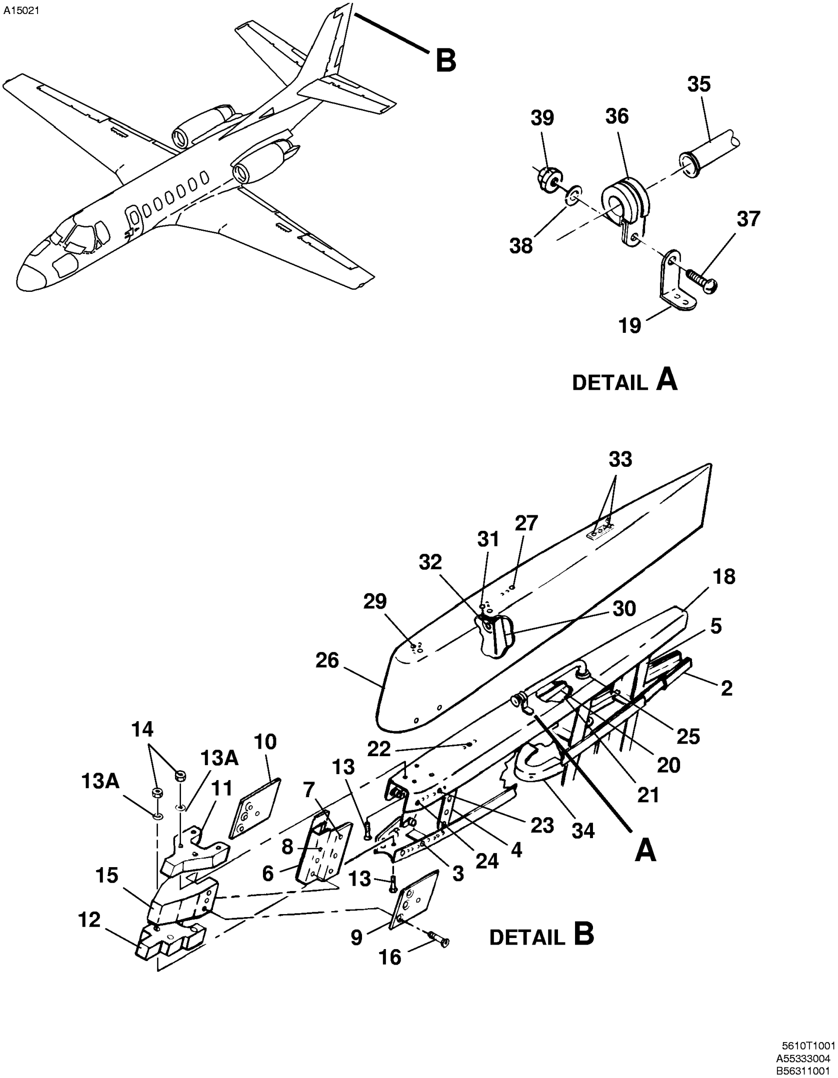

RUDDER TIP ASSEMBLY, SKINS AND TRIM TAB
FIGURE 02 (SHEET 1)

FIG ITEM	PART NUMBER	NOMENCLATURE 1 2 3 4 5 6 7			UNITS PER ASSY
02					
-		RUDDER TIP ASSEMBLY, SKINS AND TRIM TAB	0001	0538	RF
- 1	5533110-57	. RIB ASSY-UPPER RUDDER WL240.50	0001	0204	01
- 1A	5533110-163	. RIB ASSY-UPPER RUDDER WL240.50	0205	0475	01
- 1B	5533110-167	. RIB ASSY-UPPER RUDDER WL240.50	0476	0538	01
2	5533110-49	. . RIB	0001	0204	01
- 2A	5533110-165	. . RIB	0205	0475	01
- 2B	5533110-170	. . RIB	0476	0538	01
3	MS21073L08	. . NUTPLATE			04
4	5533000-23	. CHANNEL-FORWARD TIP SUPPORT			01
5	5533000-7	. CHANNEL-AFT TIP SUPPORT			01
6	5533150-11	. BRACKET ASSY-RUDDER BALANCE WEIGHT			01
7	MS21051L08	. . NUTPLATE			06
8	MS21069L3	. . NUTPLATE			06
9	5533150-9	. STRAP LH SUPPORT			01
10	5533150-10	. STRAP RH SUPPORT			01
11	5533150-23	. WEIGHT-COUNTERBALANCE	0001	0385	01
- 11A	5533150-27	. WEIGHT-COUNTERBALANCE	0386	0538	01
12	5533150-18	. WEIGHT-COUNTERBALANCE	0001	0385	01
- 12A	5533150-26	. WEIGHT-COUNTERBALANCE	0386	0538	01
13	AN3C7	. BOLT-WEIGHT ATTACH			04
13A	NAS1149F0332P	. WASHER-UNDER NUT WEIGHT ATTACH			04
14	MS21083N3	. NUT-WEIGHT ATTACH			04
15	5533150-15	. WEIGHT-COUNTERBALANCE	0001	0385	01
- 15A	5533150-25	. WEIGHT-COUNTERBALANCE	0386	0538	01
16	MS24694-S67	. SCREW			06
- 17	5533130-23	. RIB ASSY-TIP WL244.45	0001	0475	01
- 17A	5533130-36	. RIB ASSY-TIP WL244.45	0476	0538	01
18	5533130-22	. . RIB			01
19	5533130-11	. . BRACKET-CLAMP			01
20	5533130-14	. . ANGLE	0001	0475	01
- 20A	5533130-37	. . ANGLE	0476	0538	01
21	5533130-15	. . ANGLE	0001	0475	01
- 21A	5533130-38	. . ANGLE	0476	0538	01
22	MS21047L06	. . NUTPLATE			01
23	MS21047L08	. . NUTPLATE			02
24	MS21051L08	. . NUTPLATE			02
25	MS35489-11	. . GROMMET			01
26	5533130-30	. TIP ASSY RUDDER-FSO 5533130-34	0001	0219	NP
- 26A	5533130-34	. TIP ASSY, RUDDER	0220	0538	01
27	MS21069L3	. . NUTPLATE			01
- 28	5533130-4	. . BRACKET ASSY-FORWARD REFER TO NOTE 1			01
29	MS21071L3K	. . . NUTPLATE			02
30	5533130-7	. . BRACKET ASSY-AFT REFER TO NOTE 1			01
31	MS21071L3K	. . . NUTPLATE			02
32	MS35489-10	. . . GROMMET			01
33	MS21069L04	. . NUTPLATE-STATIC WICK			02
34	5533000-12	. CLIP-RIB SUPPORT			01
35		. CONDUIT-WIRE BUNDLE REFER TO 55-40-00 FIGURE 01			RF
36	MS21919DG6	. CLAMP			01
37	NAS603-6	. SCREW			01
38	NAS1149D0332K	. WASHER			01
39	MS21042L3	. NUT			01

NOTE 1—REPLACE 5533130-4 AND 5533130-7 WITH 5533130-34

- ITEM NOT ILLUSTRATED

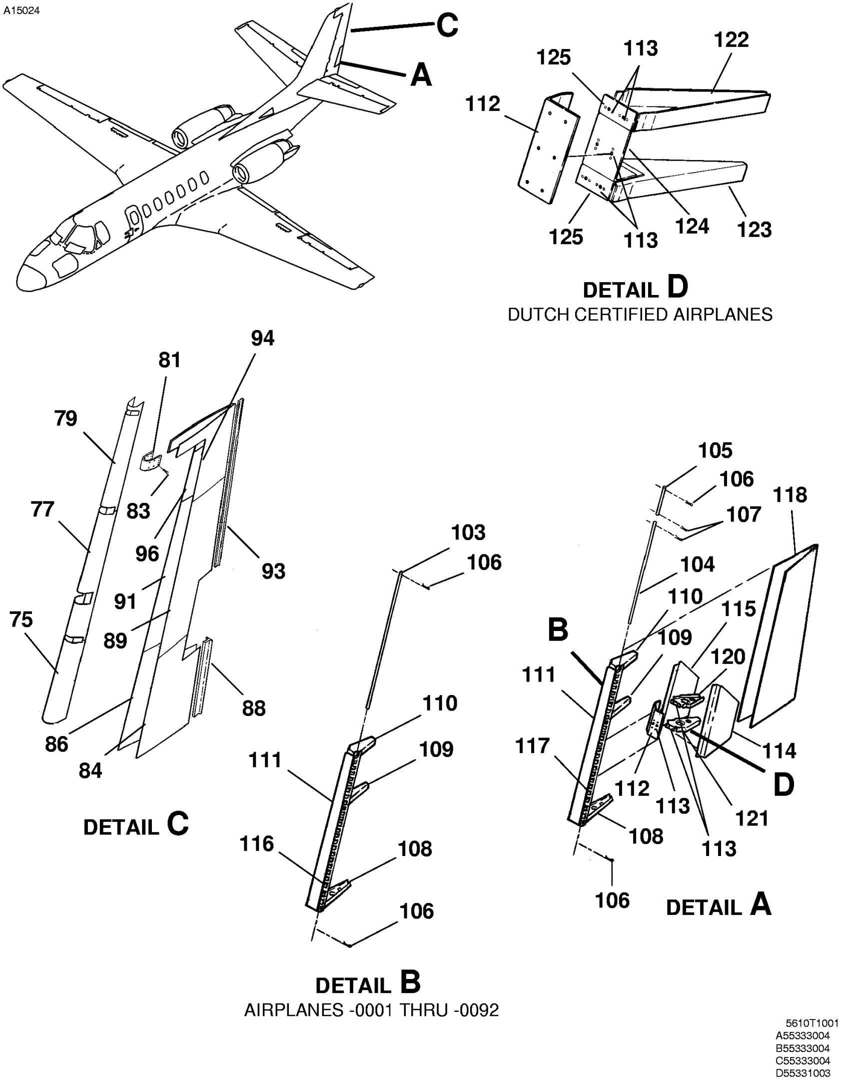

RUDDER TIP ASSEMBLY, SKINS AND TRIM TAB
FIGURE 02 (SHEET 2)

FIG ITEM	PART NUMBER	NOMENCLATURE 1 2 3 4 5 6 7			UNITS PER ASSY
02					
75	5533000-13	. SKIN LEADING EDGE LOWER FSO 5533000-78	0001	0137	NP
- 76	5533000-78	. SKIN LEADING EDGE LOWER	0138	0538	01
77	5533000-14	. SKIN LEDING EDGE CENTER FSO 5533000-77	0001	0137	NP
- 78	5533000-77	. SKIN LEADING EDGE CENTER	0138	0538	01
79	5533000-21	. SKIN LEADING EDGE UPPER FSO 5533000-76	0001	0137	NP
- 80	5533000-76	. SKIN LEADING EDGE UPPER	0138	0538	01
81	5533000-31	. SKIN LEADING EDGE HORN-RUDDER TIP FSO 5533000-75	0001	0137	NP
- 82	5533000-75	. SKIN LEADING EDGE HORN-RUDDER TIP	0138	0538	01
83	MS24694-S48	. SCREW SCREW-SKIN ATTACH			14
84	5533000-53	. SKIN LOWER LH FSO 5533000-89	0001	0137	NP
- 85	5533000-89	. SKIN LOWER LH	0138	0538	01
86	5533000-54	. SKIN LOWER RH FSO 5533000-90	0001	0137	NP
- 87	5533000-90	. SKIN LOWER RH	0138	0538	01
88	5533000-26	. TRAILING EDGE LOWER			01
89	5533000-16	. SKIN LH-CENTER FSO 5532000-65	0001	0137	NP
- 90	5533000-65	. SKIN LH-CENTER	0138	0538	01
91	5533000-27	. SKIN RH-CENTER	0001	0137	01
- 92	5533000-66	. SKIN RH-CENTER	0138	0538	01
93	5533000-30	. TRAILING EDGE UPPER			01
94	5533000-32	. SKIN ASSY-UPPER LH FSO 5533000-61	0001	0137	01
- 95	5533000-61	. SKIN BOND ASSY-LH HORN	0138	0538	01
96	5533000-29	. SKIN ASSY RH-UPPER RH FSO 5533000-62	0001	0137	01
- 97	5533000-62	. SKIN BOND ASSY-RH HORN	0138	0538	01
- 98	5533200-27	. RUDDER TRIM TAB ASSY FSO 5533200-200	0001	0092	NP
- 99	5533200-201	. RUDDER TRIM TAB KIT REFER TO NOTE 1	0001	0092	01
- 100	5533200-36	. TAB ASSY RUDDER TRIM REFER TO NOTE 1	0093	0137	01
- 101	5533200-40	. RUDDER TRIM TAB ASSY FSO 5533200-201	0138	0538	01
- 102	5596300-2	. TAB ASSY-RUDDER TRIM DUTCH CERTIFIED AIRPLANES	0100	0538	01
		ATTACHING PARTS			
103	MS20253P2-2677	. HINGE PIN USE ONLY WITH 5533200-27	0001	0092	01
104	MS20253P2-1931	. HINGE PIN REFER TO NOTE 1	0093	0538	01
105	MS20253P2-585	. HINGE PIN REFER TO NOTE 1	0093	0538	01
106	MS24665-132	. COTTER PIN	0001	0538	02
107	MS24665-132	. COTTER PIN REFER TO NOTE 1	0093	0538	02
		—*—			
108	5533200-31	. . RIB-LOWER			01
109	5533200-35	. . RIB-CENTER			01
110	5533200-34	. . RIB-UPPER			01
111	5533200-28	. . TAB SPAR			01
112	5533200-19	. . DOUBLER-SPAR			01
113	MS21069L3	. . NUTPLATE	0001	0092	06
- 113A	MS21069L3K	. . NUTPLATE	0093	& ON	02
- 113B	MS21073L3K	. . NUTPLATE	0093	& ON	04
114	5533200-26	. . DOUBLER			01
115	5533200-29	. . DOUBLER			01
116	5533200-30	. . HINGE HALF-TRIM TAB	0001	0092	01
117	5533200-37	. . HINGE HALF-TRIM TAB FSO 5533200-202	0093	0538	01
- 117A	5533200-202	. . TRIM TAB HINGE KIT REFER TO NOTE 1	0539	0563	01 R
118	5533200-18	. . SKIN FSO 5533200-39	0001	0137	NP
- 119	5533200-39	. . SKIN	0138	0538	01
120	5533200-33	. . RIB-UPPER			01
121	5533200-32	. . RIB-LOWER			01
122	5596300-3	. . RIB-MOD-UPPER DUTCH CERTIFIED AIRPLANES	0100	0538	01
123	5596300-4	. . RIB-MOD-LOWER DUTCH CERTIFIED AIRPLANES	0100	0538	01
124	5596300-5	. . BRACKET DUTCH CERTIFIED AIRPLANES	0100	0538	01
125	5596300-6	. . ANGLE DUTCH CERTIFIED AIRPLANES	0100	0538	02

NOTE 1—THIS KIT CONSISTS OF 5533200-43 HINGE HALF, 6633000-32 HINGE HALF, S3492-1-1931 PIN, S3492-1-585 PIN AND MS24665-151 COTTER PIN.

- ITEM NOT ILLUSTRATED

A27481

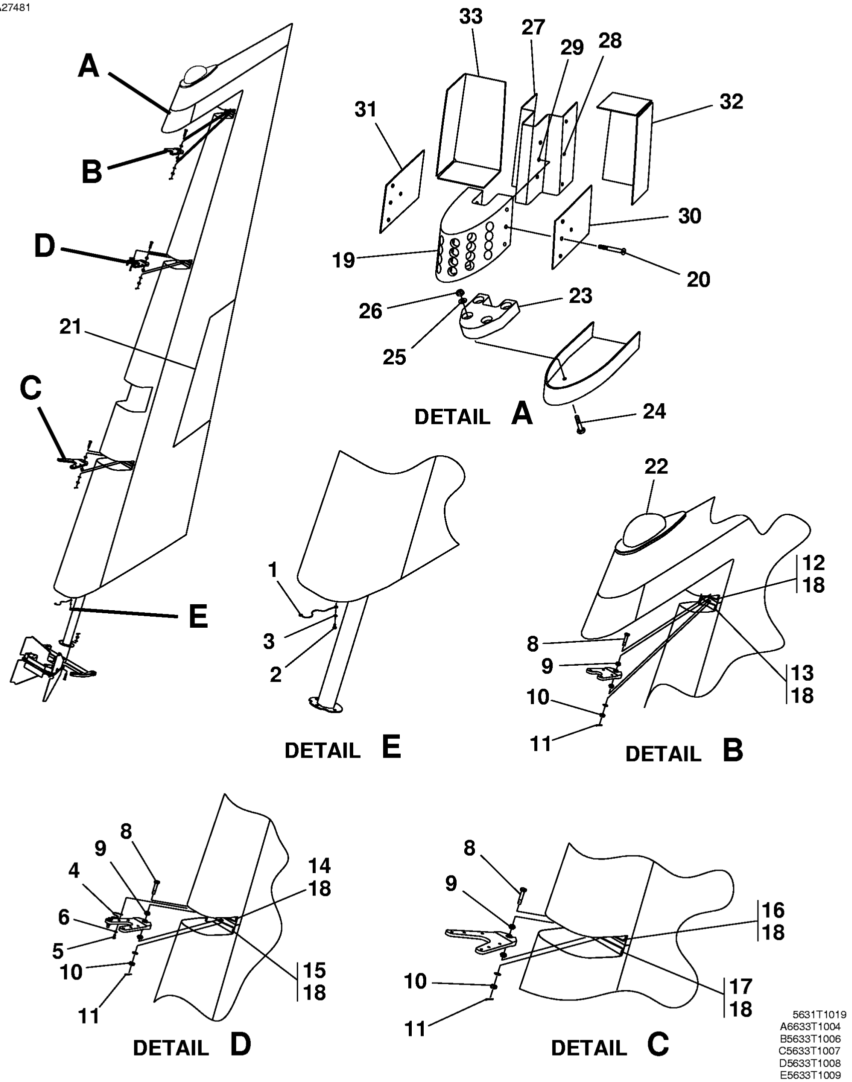

RUDDER INSTALLATION
FIGURE 03 (SHEET 1)

FIG ITEM	PART NUMBER	NOMENCLATURE 1 2 3 4 5 6 7			UNITS PER ASSY
03					
-		RUDDER INSTALLATION	0539	& ON	RF R
1	MS25083-2AA6	. JUMPER ASSY			01
		ATTACHING PARTS			
2	MS35206-227	. SCREW			01
3	AN961-6T	. WASHER			01
		—*—			
4	MS25083-2AB6	. JUMPER ASSY			01
		ATTACHING PARTS			
5	MS35206-227	. SCREW			01
6	AN961-6T	. WASHER			01
		—*—			
- 7	6633000-13	. RUDDER ASSY FSO 6633000-201	0539	0563	NP
- 7A	6633000-31	. RUDDER ASSY FSO 6633000-201	0564	& ON	NP R
- 7B	6633000-201	. RUDDER ASSY			01
		ATTACHING PARTS			
8	NAS6204-13D	. BOLT			03
9	NAS1149F0463P	. WASHER			03
10	MS17826-4	. NUT			03
11	MS24665-134	. COTTER PIN			03
		—*—			
12	6631210-23	. . HINGE HALF ASSY-TOP UPPER FSO 6631210-36	0539	0609	NP
- 12A	6631210-36	. . HINGE HALF ASSY-TOP UPPER	0602	& ON	01 R
13	6631210-25	. . HINGE HALF ASSY-TOP LOWER FSO 6631210-38	0539	0609	NP
- 13A	6631210-38	. . HINGE HALF ASSY-TOP LOWER	0602	& ON	01 R
14	6631210-27	. . HINGE HALF ASSY-MIDDLE UPPER FSO 6631210-40	0539	0609	01
- 14A	6631210-40	. . HINGE HALF ASSY-MIDDLE UPPER	0610	& ON	01 R
15	6631210-29	. . HINGE HALF ASSY-MIDDLE LOWER FSO 6631210-42	0539	0609	NP
- 15A	6631210-42	. . HINGE HALF ASSY-MIDDLE LOWER	0610	& ON	01 R
16	6631210-31	. . HINGE HALF ASSY-BOTTOM UPPER FSO 6631210-44	0539	0609	NP
- 16A	6631210-44	. . HINGE HALF ASSY-BOTTOM UPPER	0610	& ON	01 R
17	6631210-33	. . HINGE HALF ASSY-BOTTOM LOWER FSO 6631210-46	0539	0609	NP
- 17A	6631210-46	. . HINGE HALF ASSY-BOTTOM LOWER	0610	& ON	01 R
18	5522876-1	. . . SPACER			01
19	5533150-25	. . WEIGHT-RUDDER BALANCE			01
		ATTACHING PARTS			
20	MS24694-S67	. . SCREW			06
		—*—			
21	5533000-56	. . HINGE HALF-RUDDER FSO 5533200-202	0539	0563	NP
- 21A	5533200-202	. . TRIM TAB HINGE KIT REFER TO NOTE 1	0539	0563	01
- 21B	6633000-32	. . HINGE HALF-RUDDER	0564	& ON	01 R
22		. . LIGHT ASSY-EMPENNAGE GROUND RECOGNITION REFER TO 33-40-01 FIGURE 02			RF
23	6633150-8	. . WEIGHT-RUDDER BALANCE			01
		ATTACHING PARTS			
24	NAS6203-9D	. . BOLT			04
25	NAS1149F0332P	. . WASHER			04
26	MS21083N3	. . NUT			04
		—*—			
27	6633150-2	. . BRACKET ASSY			01
28	MS21051L08	. . . NUTPLATE			03
29	MS21069L3	. . . NUTPLATE			03
30	6633150-5	. . STRAP-LH			01
31	6633150-6	. . STRAP-RH			01
32	6633150-3	. . CHANNEL			01
33	6633150-4	. . CHANNEL			01

NOTE 1—THIS KIT CONSISTS OF 5533200-43 HINGE HALF, 6633000-32 HINGE HALF, S3492-1-1931 PIN, S3492-1-585 PIN AND MS24665-151 COTTER PIN.

- ITEM NOT ILLUSTRATED

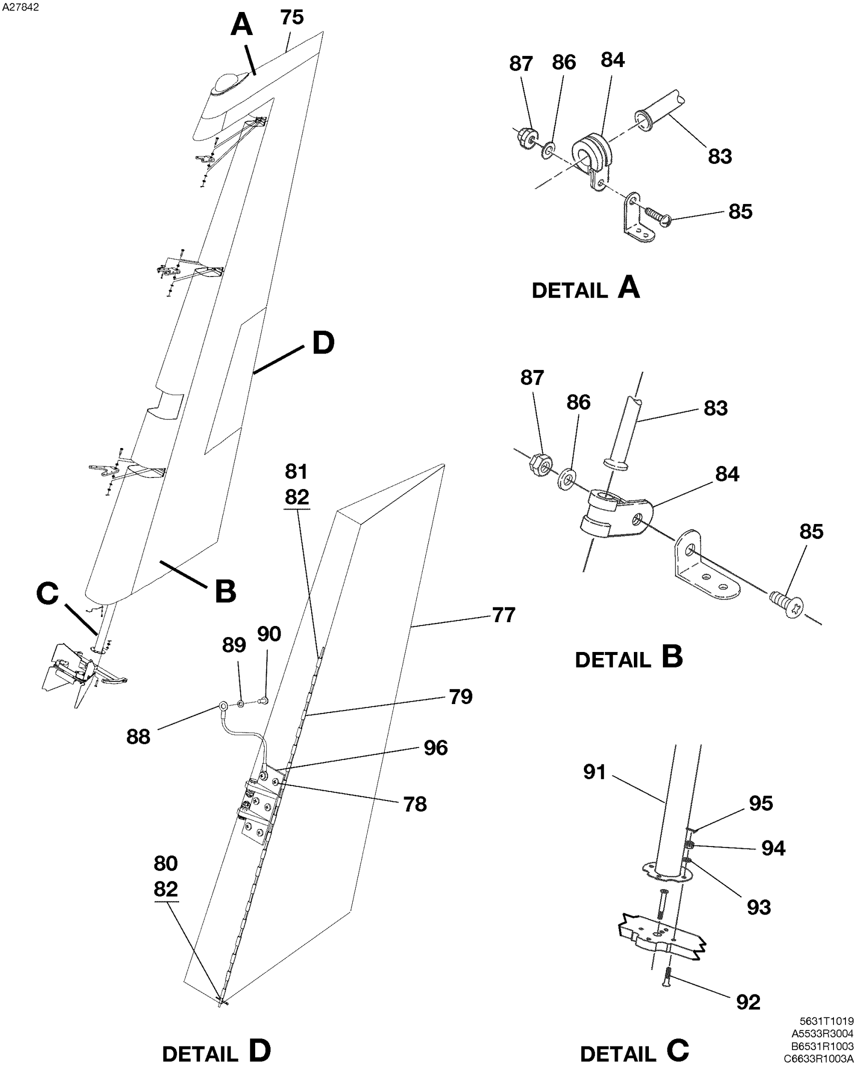

RUDDER INSTALLATION
FIGURE 03 (SHEET 2)

FIG ITEM	PART NUMBER	NOMENCLATURE 1 2 3 4 5 6 7			UNITS PER ASSY
03					
75	5533130-9	. . RUDDER TIP REFER TO NOTE 2			01
- 76		. . DELETED-NOT USED			
77	5533200-41	. . RUDDER TRIM TAB ASSY FSO 5533200-201	0539	0563	NP
- 77A	5533200-201	. . RUDDER TRIM TAB KIT	0539	0563	01
- 77B	5533200-42	. . RUDDER TRIM TAB ASSY FSO 5533200-46	0564	& ON	NP R
- 77C	5533200-46	. . RUDDER TRIM TAB ASSY	0564	& ON	01 R
78	MS21069L3K	. . . NUTPLATE			06
79	5533200-37	. . . HINGE HALF FSO 5533200-202	0539	0563	01
- 79A	5533200-202	. . . TRIM TAB HINGE KIT REFER TO NOTE 1	0539	& ON	01 R
- 79B	5533200-43	. . . HINGE HALF	0564	& ON	01 R
80	S3492P1-1931	. . PIN-HINGE	0539	0563	01
- 80A	S3492-1-1931	. . PIN-HINGE REFER TO NOTE 3	0564	& ON	NP R
81	S3492P1-585	. . PIN-HINGE	0539	0563	01
- 81A	S3492-1-585	. . PIN-HINGE	0564	& ON	01 R
82	MS24665-132	. . COTTER PIN	0539	0563	04
- 82A	MS24665-151	. . COTTER PIN	0564	& ON	04 R
83	6633000-9	. . CONDUIT			01
84	MS21919DG6	. . CLAMP			02
		ATTACHING PARTS			
85	NAS603-6	. . SCREW			01
86	NAS1149D0316K	. . WASHER			01
87	MS21042L3	. . NUT			01
		—*—			
88	MS25083-2AB4	. . JUMPER ASSY			01
		ATTACHING PARTS			
89	MS35206-227	. . SCREW			01
90	AN961-6T	. . WASHER			01
		—*—			
91	6633225-15	. . TORQUE TUBE ASSY FSO 6633225-21	0539	0655	NP
- 91A	6633225-21	. . TORQUE TUBE ASSY	0656	& ON	01 R
		ATTACHING PARTS			
92	NAS334CP10-5	. . BOLT			04
93	NAS1149F0463P	. . WASHER			04
94	MS17825-4	. . NUT			04
95	MS24665-134	. . COTTER PIN			04
		—*—			
96		. RUDDER TRIM TAB ACTUATOR INSTALLATION REFER TO 27-20-02 FIGURE 01			RF

NOTE 1—THIS KIT CONSISTS OF 5533200-43 HINGE HALF, 6633000-32 HINGE HALF, S3492-1-1931 PIN, S3492-1-585 PIN AND MS24665-151 COTTER PIN.

NOTE 2—REPLACE 5533130-9 WITH 5533130-34.

NOTE 3—REPLACE WITH 6633000-33 USING ONE MS24665-22 COTTER PIN.

- ITEM NOT ILLUSTRATED

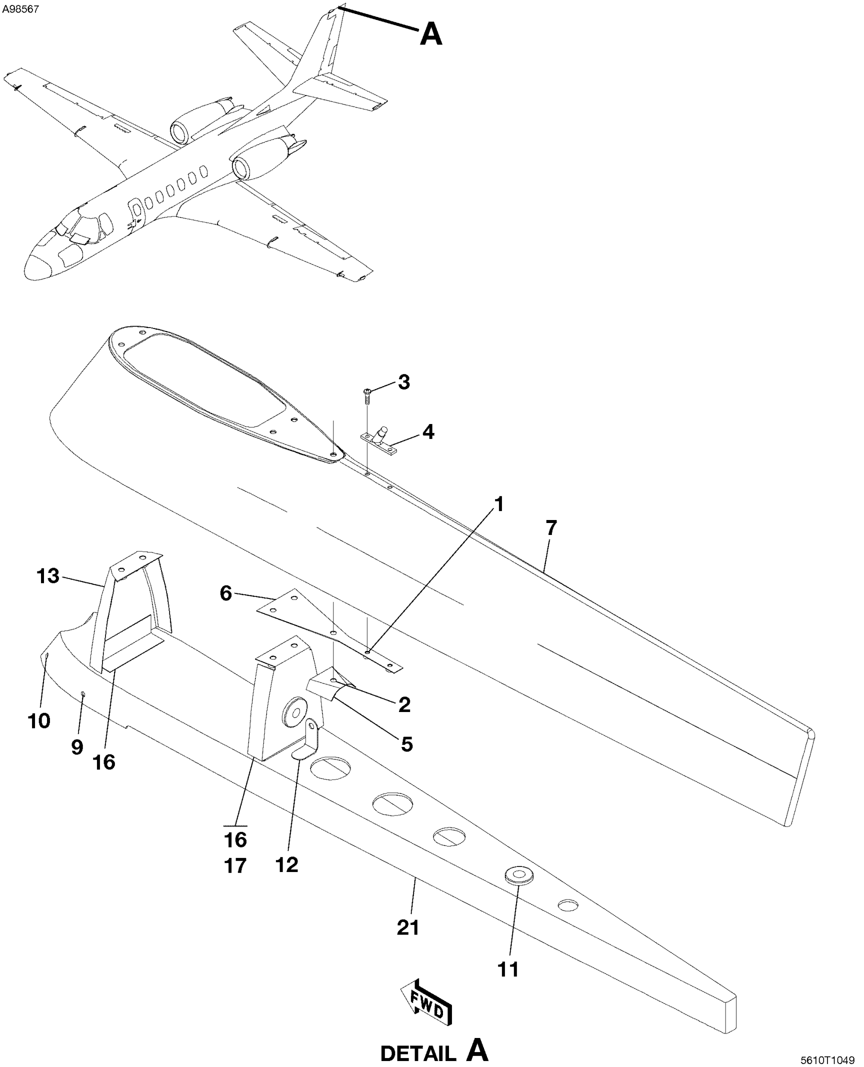

RUDDER TIP ASSEMBLY, SKINS AND TRIM TAB
FIGURE 04 (SHEET 1)

FIG ITEM	PART NUMBER	NOMENCLATURE 1 2 3 4 5 6 7			UNITS PER ASSY
04					
-		RUDDER TIP ASSEMBLY, SKINS AND TRIM TAB	0539	& ON	RF R
1	MS21069L04	. NUTPLATE			02 R
2	MS21069L3	. NUTPLATE			01 R
3	MS35206-216	. SCREW			02 R
4	15347	. MOUNTING BASE V55635			01 R
5	5533130-10	. BRACKET			01 R
6	5533130-33	. BRACKET			01 R
7	5533130-9	. RUDDER TIP			01 R
- 8	6633130-2	. RIB ASSY			01 R
9	MS21047L08	. . NUTPLATE			02 R
10	MS21051L08	. . NUTPLATE			02 R
11	MS35489-11	. . GROMMET			01 R
12	5533130-11	. . BRACKET			01 R
13	5533130-4	. . BRACKET ASSY			01 R
- 14	MS21071L3K	. . . NUTPLATE			02 R
- 15	5533130-5	. . . BRACKET			02 R
16	5533130-6	. . ANGLE			02 R
17	5533130-7	. . BRACKET ASSY			01 R
- 18	MS21071L3K	. . . NUTPLATE			02 R
- 19	MS35489-10	. . . GROMMET			01 R
- 20	5533130-8	. . . BRACKET			01 R
21	6633130-3	. . RIB			01 R

- ITEM NOT ILLUSTRATED

CHAPTER SECTION SUBJECT		NUMBER OF PAGES	DATE
56 - TITLE			
56 - LIST OF EFFECTIVE PAGES			
56 - RECORD OF TEMPORARY REVISIONS			
56 - TABLE OF CONTENTS			
56-10-00	Figure 01	6	Mar 1/2011
56-10-01	Figure 01	4	Aug 1/2013
56-10-02	Figure 01	2	Mar 1/2011
56-20-00	Figure 01	4	Aug 1/2015
56-20-00	Figure 02	2	Mar 1/2010

© Cessna Aircraft Company

SUBJECT	CHAPTER SECTION SUBJECT	FIGURE	EFFECTIVITY START	EFFECTIVITY END
WINDSHIELD - FLIGHT COMPARTMENT	56-10-00	01		
WINDOWS - FLIGHT COMPARTMENT	56-10-01	01		
WINDOW - FOUL WEATHER	56-10-02	01		
CABIN WINDOWS	56-20-00	01		
WINDOWS - INNER CABIN	56-20-00	02		

© Cessna Aircraft Company

A15010

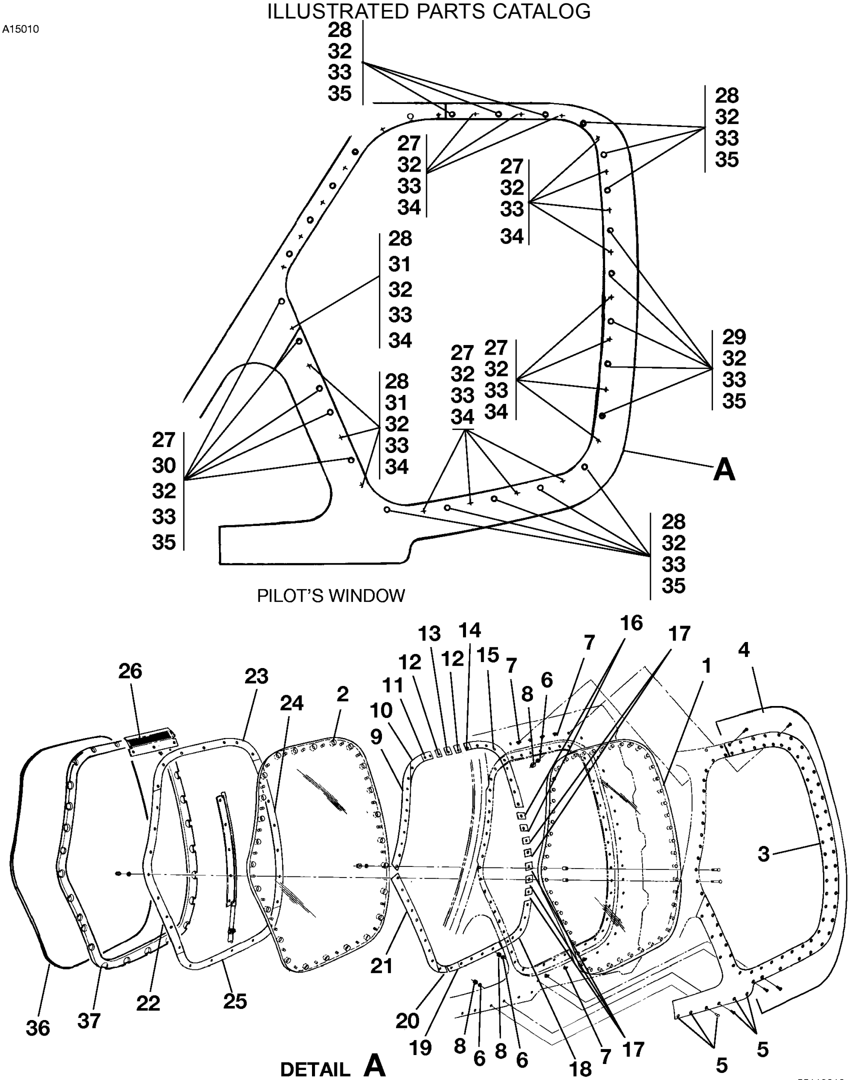

55112018
A56112005

WINDOWS - FLIGHT COMPARTMENT
FIGURE 01 (SHEET 1)

FIG ITEM	PART NUMBER	NOMENCLATURE 1 2 3 4 5 6 7	Vendor	From	To	UNITS PER ASSY
01						
-		WINDOWS - FLIGHT COMPARTMENT				RF
1	5511285-3	. OUTER PANE-LH PILOTS WINDOW FSO 5511285-47		0001	0136	NP
- 1A	5511285-47	. OUTER PANE-LH PILOTS WINDOW		0137	& ON	01
2	5511285-5	. INNER PANE-LH PILOTS INNER				01
- 2A	4508	. TAPE	V28218			AR
3	5511265-5	. RETAINER LH REFER TO NOTE 4		0001	0215	NP
- 3A	5511265-19	. RETAINER LH FSO 5511265-203		0216	& ON	NP
- 3B	5511265-203	. RETAINER-LH		0001	0750	01 R
				0752	& ON	
4	MS24694-S48	. SCREW				27
5	MS24694-S49	. SCREW				06
6	NAS1149F0332P	. WASHER				25
7	NAS1474A3	. NUTPLATE				08
8	MS21042L3	. NUT				25
9	5511285-13	. SHIM FSO 5511285-59		0001	0571	NP
- 9A	5511285-59	. SHIM		0572	& ON	01
10	5511285-40	. SHIM FSO 5511285-67		0001	0571	NP
- 10A	5511285-67	. SHIM		0572	& ON	01
11	5511285-39	. SHIM FSO 5511285-66		0001	0571	NP
- 11A	5511285-66	. SHIM		0572	& ON	01
12	5511285-37	. SHIM FSO 5511285-64		0001	0571	NP
- 12A	5511285-64	. SHIM		0572	& ON	02
13	5511285-38	. SHIM FSO 5511285-65		0001	0571	NP
- 13A	5511285-65	. SHIM		0572	& ON	01
14	5511285-36	. SHIM FSO 5511285-63		0001	0571	NP
- 14A	5511285-63	. SHIM		0572	& ON	01
15	5511285-41	. SHIM FSO 5511285-68		0001	0571	NP
- 15A	5511285-68	. SHIM		0572	& ON	01
16	5511285-46	. SHIM FSO 5511285-73		0001	0571	NP
- 16A	5511285-73	. SHIM		0572	& ON	02
17	5511285-25	. SHIM FSO 5511285-61		0001	0571	NP
- 17A	5511285-61	. SHIM		0572	& ON	05
18	5511285-26	. SHIM FSO 5511285-62		0001	0571	NP
- 18A	5511285-62	. SHIM		0572	& ON	01
19	5511285-45	. SHIM FSO 5511285-71		0001	0571	NP
- 19A	5511285-71	. SHIM		0572	& ON	01
20	5511285-43	. SHIM FSO 5511285-69		0001	0571	NP
- 20A	5511285-69	. SHIM		0572	& ON	01
21	5511285-15	. SHIM FSO 5511285-75		0001	0571	NP
- 21A	5511285-75	. SHIM		0572	& ON	01
22	5511285-19	. INNER RING				01
23	5511285-21	. INNER RING				01
24	5511285-29	. INNER RING				01
25	5511285-23	. INNER RING				01
26	5511285-31	. SCREEN ASSY LH REFER TO NOTE 1		0001	0538	01
- 26A	5511285-49	. RETAINER LH REFER TO NOTE 2		0539	& ON	01
- 26B	5511285-54	. CHECK VALVE ASSY REFER TO NOTE 2		0539	& ON	01
- 26C	6590333-5	. STOP REFER TO NOTE 3		0001	0538	01
- 26D	5511285-57	. STOP		0539	& ON	01
27	HL19PB6-10	. PIN-HI LOK	V73197	0001	0306	AR
- 27A	HL19PB6-10	. PIN-HI LOK	V73197	0307	& ON	AR
28	HL19PB6-15	. PIN-HI LOK	V73197	0001	0306	AR
- 28A	HL19PB6-15	. PIN-HI LOK	V73197	0307	& ON	AR
29	HL19PB6-16	. PIN-HI LOK	V73197	0307	& ON	AR
30	NAS1581F3R15	. BOLT FSO NAS1581A3R15 OR NAS1581C3R15P		0307	& ON	NP
- 30A	NAS1581A3R15	. BOLT		0307	& ON	05
- 30B	NAS1581C3R15P	. BOLT		0307	& ON	05
31	NAS1581F3R10	. BOLT FSO NAS1581A3R10 OR NAS1581C3R10P		0307	& ON	NP
- 31A	NAS1581A3R10	. BOLT		0307	& ON	04
- 31B	NAS1581C3R10P	. BOLT		0307	& ON	04
32	CM3697-1-0.45	. TUBE-BUSHING				51
33	NAS1149F0332P	. WASHER				51
34	MS21042L3	. NUT				50
35	MS21083N3	. NUT				26
36	6519435-1	. FROST PANE-LH				01
37	6519435-3	. SEAL-LH-FROST PANE		0002	0421	01
- 38	6519435-11	. SEAL-LH-FROST PANE		0422	& ON	01

NOTE 1—AIRPLANES -0001 THRU -0538 NOT INCORPORATING SB560-21-15.

NOTE 2—AIRPLANES -0539 AND ON AND AIRPLANES -0001 THRU -0538 INCORPORATING SB560-21-15.

NOTE 3—AIRPLANES -0001 THRU -0538 INCORPORATING SB560-21-15.

NOTE 4—FOR SPARES ORDER 5511265-19 WITH HOLES & 5511265-203 WITHOUT HOLES

- ITEM NOT ILLUSTRATED

A19112

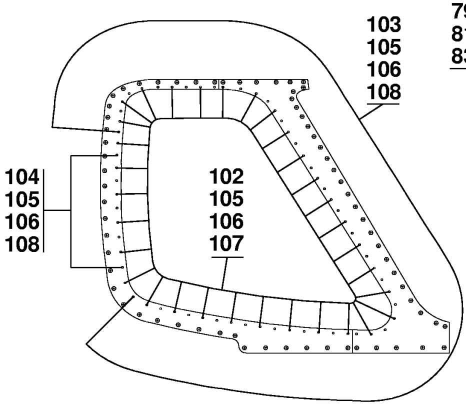

HI-LOK LOCATIONS

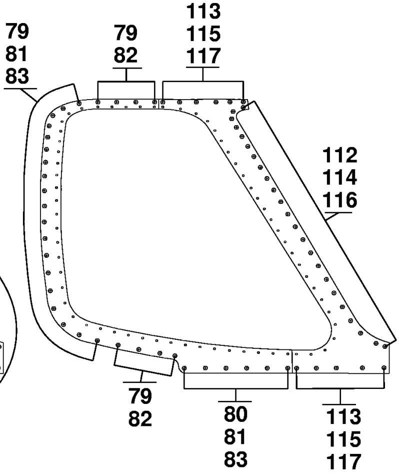

SCREW LOCATIONS

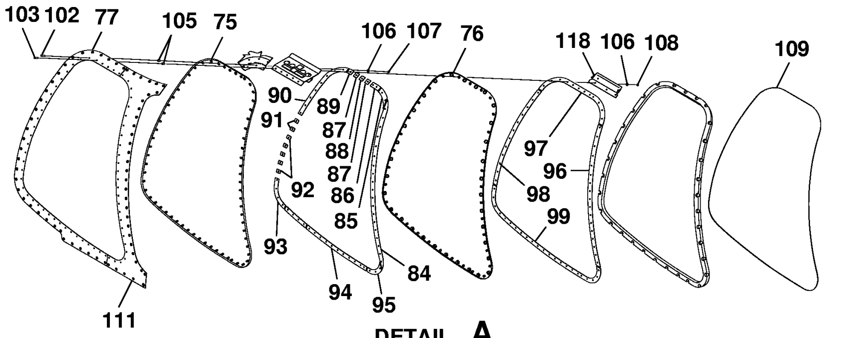

DETAIL A

5611T1078
A5611T1079

WINDOWS - FLIGHT COMPARTMENT
FIGURE 01 (SHEET 2)

FIG ITEM	PART NUMBER	NOMENCLATURE 1 2 3 4 5 6 7				UNITS PER ASSY
01						
75	5511285-4	. OUTER PANE-RH WINDOW FSO 5511285-200		0001	0136	NP
- 75A	5511285-48	. OUTER PANE-RH WINDOW FSO 5511285-200		0137	0648	NP
- 75B	5511285-200	. OUTER PANE KIT-RH WINDOW		0001	0648	01
- 75C	5511285-78	. OUTER PANE-RH WINDOW		0649	& ON	01
76	5511285-6	. INNER PANE-RH WINDOW				01
77	5511265-6	. RETAINER RH REFER TO NOTE 5		0001	0215	NP
- 78	5511265-18	. RETAINER RH FSO 5511265-204		0216	& ON	NP
- 78A	5511265-204	. RETAINER-RH		0001	0750	01 R
				0752	& ON	
79	MS24694-S48	. SCREW				27
80	MS24694-S49	. SCREW				06
81	NAS1149D0363H	. WASHER				25
- 81A		. DELETED-NOT USED				
82	NAS1474A3	. NUTPLATE				08
83	MS21042L3	. NUT				33
84	5511285-58	. SHIM				01
85	5511285-67	. SHIM				01
86	5511285-66	. SHIM				01
87	5511285-64	. SHIM				01
88	5511285-65	. SHIM				01
89	5511285-63	. SHIM				01
90	5511285-68	. SHIM				01
91	5511285-73	. SHIM				01
92	5511285-61	. SHIM				01
93	5511285-62	. SHIM				01
94	5511285-72	. SHIM				01
95	5511285-70	. SHIM				01
96	5511285-20	. INNER RING				01
97	5511285-30	. INNER RING				01
98	5511285-24	. INNER RING				01
99	5511285-22	. INNER RING				01
- 100	5511285-50	. RETAINER RH REFER TO NOTE 1		0539	& ON	01
- 101	5511285-54	. CHECK VALVE ASSY REFER TO NOTE 1		0539	& ON	01
102	HL19PB6-10	. PIN-HI-LOK	V73197	0001	0648	32
- 102A	HL19PB5-10	. PIN-HI-LOK	V73197	0649	& ON	32
103	HL19PB6-15	. PIN-HI-LOK	V73197	0001	0648	27
- 103A	HL19PB5-15	. PIN-HI-LOK	V73197	0649	& ON	27
104	HL19PB6-16	. PIN-HI-LOK	V73197	0001	0648	05
- 104A	HL19PB5-16	. PIN-HI-LOK	V73197	0649	& ON	05
105	CM3697-1-0.45	. TUBE-BUSHING		0001	0648	64
- 105A	CM3697A2-0.45	. TUBE-BUSHING		0649	& ON	64
- 105B	5511285-77	. SPACER		0649	& ON	64
106	NAS1149F0332P	. WASHER		0001	0648	64
- 106A	NAS1149FN832P	. WASHER		0649	& ON	64
107	MS21042L3	. NUT		0001	0648	32
- 107A	MS21042L08	. NUT		0649	& ON	32
108	MS21083N3	. NUT		0001	0648	32
- 108A	MS21083N08	. NUT		0649	& ON	32
109	6519435-2	. FROST PANE-RH				01
- 110	6519435-4	. SEAL-RH FROST PANE		0001	0421	01
- 110A	6519435-12	. SEAL-RH FROST PANE		0422	& ON	01
111	5591020-4	. RETAINER-RH FORWARD REFER TO NOTE 2				01
112	NAS1581C4T17	. BOLT REFER TO NOTE 2				23
113	MS24694-S49	. SCREW REFER TO NOTE 2				11
114	NAS1149D0463H	. WASHER REFER TO NOTE 2				23
115	NAS1149D0332H	. WASHER REFER TO NOTE 2				11
116	MS21042L4	. NUT REFER TO NOTE 2				23
117	MS21042L3	. NUT REFER TO NOTE 2				11
118	5511285-32	. SCREEN ASSY RH REFER TO NOTE 3		0001	0538	01
- 119	6590333-5	. STOP REFER TO NOTE 4		0001	0538	01

NOTE 1—AIRPLANES -0539 AND ON AND AIRPLANES -0001 THRU -0538 INCORPORATING SB560-21-15

NOTE 2—AIRPLANES-0002, 0006, -0013, -0037, -0040, -0049, -0067, -0071A, -0075, -0095, -0100, -0101, -0110, -0113, -0156, -0170, -0183, -0190, -0203, -0256, -0311, -0320, -0330, -0331, -0341, -0344 THRU -0500, 0502 THRU -0554 AND ANY OTHER UNITS THAT HAVE REPLACED THE RIGHT HAND COPILOT SIDE WINDOW SINCE 01/01/1997 INCORPORATING SB560-56-01.

NOTE 3—AIRPLANES -0001 THRU -0538 NOT INCORPORATING SB560-21-15

NOTE 4—AIRPLANES -0001 THRU -0538 INCORPORATING SB560-21-15

NOTE 5—FOR SPARES ORDER 5511265-18 WITH HOLES & 5511265-204 WITHOUT HOLES

- ITEM NOT ILLUSTRATED

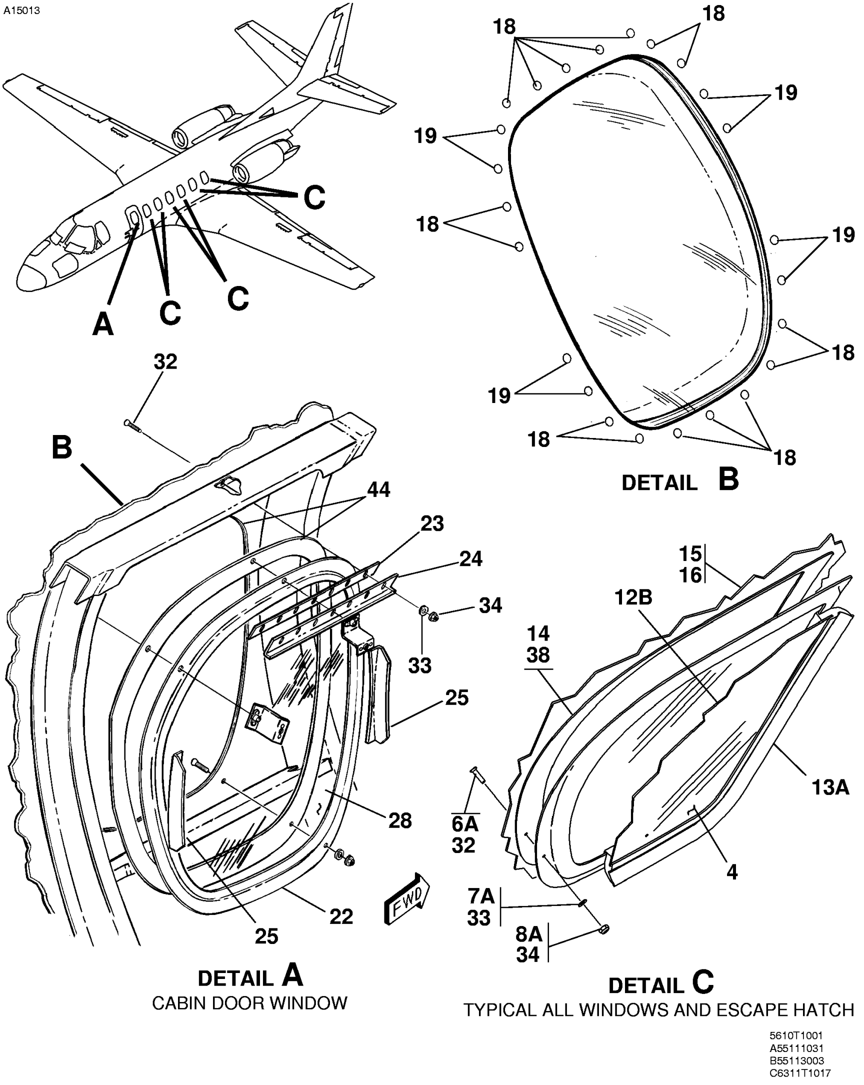

CABIN WINDOWS
FIGURE 01 (SHEET 1)

FIG ITEM	PART NUMBER	NOMENCLATURE 1 2 3 4 5 6 7				UNITS PER ASSY
01						
-		CABIN WINDOWS				RF
- 1	5511260-8	. WINDOW ASSY-CABIN AND ESCAPE HATCH FSO 6311123-204		0001	0109	NP
- 2	5511260-9	. WINDOW ASSY-CABIN AND ESCAPE HATCH FSO 6311123-11, 6311123-204 OR 6311123-203 W/FROST PANE		0110	0464	NP
- 3	6311123-11	. WINDOW ASSY-CABIN AND ESCAPE HATCH FSO 6311123-201		0135	0464	NP
- 3A	6311123-201	. WINDOW ASSY-CABIN AND ESCAPE HATCH ALSO USE 6211260-6 WITH THIS ASSY		0260	0300	13
4	6311123-13	. WINDOW ASSY-CABIN AND ESCAPE HATCH FSO 6311123-203 W/FROST PANE OR 6311123-206		0465	0538	NP
- 4A	6311123-203	. WINDOW ASSY-CABIN AND ESCAPE HATCH FROST PANE ALSO USE 6211260-6 WITH THIS ASSY		0301	0538	13
- 4B	6311123-204	. WINDOW ASSY-CABIN AND ESCAPE HATCH ALSO USE 6211260-6 WITH THIS ASSY				13
- 4C	6311123-206	. WINDOW ASSY-CABIN AND ESCAPE HATCH FROST PANE ALT FOR 6311123-203				13
- 5	6511571-1	. WINDOW ASSY-CABIN AND ESCAPE HATCH FSO 6511571-201		0539	& ON	NP
- 5A	6511571-201	. WINDOW ASSY - CABIN AND ESCAPE HATCH FOR SPARES ONLY		0539	& ON	13
		ATTACHING PARTS				
- 6	MS24694-S7	. SCREW		0001	0134	02
6A	HL19PB5-4	. PIN	V73197	0135	& ON	02
- 7	NAS1149DN832H	. WASHER		0001	0134	04
7A	NAS1149FN816P	. WASHER		0135	& ON	02
- 8	MS21083N08	. NUT		0001	0134	02
8A	S3191-08	. NUT		0135	& ON	02
- 8B	HL70-5	. COLLAR ALT FOR S3191-08	V73197	0135	& ON	02
		—*—				
- 9	9912207-1	. . WINDOW FSO 9912207-8		0001	0109	NP
- 10	9912207-8	. . WINDOW		0110	& ON	01
- 11	5511262-1	. . WINDOW RETAINER				01
- 12	6319030-3	. . FROST PANE		0135	0464	01
- 12A	6519437-5	. . FROST PANE		0465	0538	01
12B	6519667-2	. . CABIN FROST PANE		0539	& ON	01
- 13	6319054-2	. . FROST PANE SEAL - CABIN		0135	0538	01
13A	6519667-1	. . CABIN FROST PANE SEAL		0539	& ON	01
14	6211260-6	. . SEAL		0465	& ON	01
15		. SKIN BOND ASSEMBLY REFER TO 53-30-00 FIGURE 01 AND 52-20-01 FIGURE 01				RF
16		. WINDOW SHADE-PASSENGER COMPARTMENT REFER TO 25-20-02 FIGURE 01				RF
- 17	9912207-1	. WINDOW-CABIN DOORFSO 9912207-8		0001	0109	NP
- 17A	9912207-8	. WINDOW-CABIN DOOR		0001	0464	01
		ATTACHING PARTS				
18	MS24694-S7	. SCREW		0001	0134	16
19	MS24694-S7	. SCREW		0001	0134	08
- 19A		. DELETED-NOT USED				
- 20	NAS1149DN832H	. WASHER		0001	0134	24
- 21	MS21083N08	. NUT		0001	0134	24
- 21A	NAS1022N08	. NUT ALT FOR MS21083N08		0001	0134	24
		—*—				
22	5511262-1	. WINDOW RETAINER		0001	0464	01
23	5511230-41	. SHIM FSO 6511700-15		0001	0464	NP
24	5511230-40	. ANGLE FSO 6511700-14		0001	0464	NP
25	5511230-42	. ANGLE FSO 6511700-13		0001	0464	NP
- 26	9912075-3	. SEAL-CABIN DOOR WINDOW		0001	0008	01
- 27	9912075-4	. SEAL-CABIN DOOR WINDOW		0009	& ON	01
28	6311123-12	. WINDOW ASSY-CABIN DOOR FSO 6311123-208		0465	& ON	NP R
- 29	6311123-202	. WINDOW ASSY-CABIN DOOR WITH FROST PANE FSO 6311123-208		0260	& ON	NP R
- 29A	6311123-208	. WINDOW ASSY-CABIN DOOR WITH FROST PANE FOR SPARES ONLY		0260	0750	01 R
				0752	& ON	
- 30		. DELETED-NOT USED				
- 31		. DELETED-NOT USED				
32	HL19PB5-4	. PIN	V73197	0465	& ON	19
33	NAS1149FN816P	. WASHER		0465	& ON	19
34	MS21043-08	. NUT		0465	& ON	19
- 34A	NAS1291C08	. NUT ALT FOR MS21043-08		0465	& ON	19
- 35	9912207-8	. . WINDOW-DOOR		0465	& ON	01
- 36	6319054-1	. . FROST PANE SEAL - DOOR USED W/6311123-12 AND 6311123-202		0465	0538	01
- 37	6319054-3	. . FROST PANE - DOOR USED W/6311123-12 AND 6311123-202		0260	& ON	01
38	6211260-6	. . SEAL		0465	& ON	01
- 39	6511700-15	. SHIM		0651	& ON	01
- 40	6511700-14	. ANGLE		0651	& ON	01
- 41	6511700-13	. ANGLE		0651	0813	01
- 41A	6511700-36	. ANGLE		0814	& ON	01
- 42	5514776-42	. INNER WINDOW-CABIN DOOR		0001	0395	01
- 43	5514776-102	. INNER WINDOW-CABIN DOOR		0393	0538	01
44		. DOOR SKIN BOND ASSEMBLY REFER TO 52-10-00 FIGURE 02				RF

- ITEM NOT ILLUSTRATED

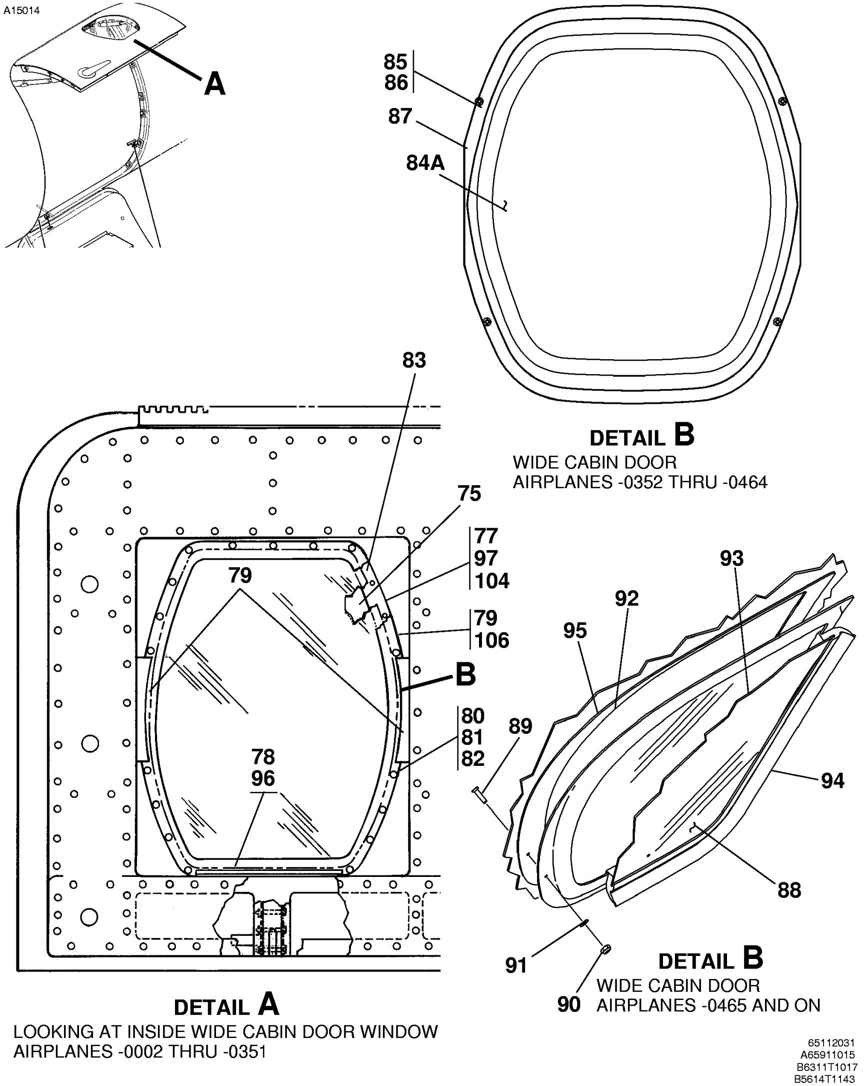

CABIN WINDOWS
FIGURE 01 (SHEET 2)

FIG ITEM	PART NUMBER	NOMENCLATURE 1 2 3 4 5 6 7			UNITS PER ASSY
01					
75	9912207-8	. WINDOW-WIDE CABIN DOOR	0111	0464	01
- 76	5511262-2	. RETAINER-CABIN DOOR WINDOW FSO 5511262-5			NP R
- 76A	5511262-5	. RETAINER-CABIN DOOR WINDOW	0260 0752	0750 & ON	01 R
77	5511160-42	. DOUBLER-WIDE CABIN DOOR FSO 6511698-2	0111	0464	01
78	6511211-31	. ANGLE-WIDE CABIN DOOR	0111	0464	01
79	5511230-42	. ANGLE-WIDE CABIN DOOR FSO 6511700-13	0111	0134	NP
		ATTACHING PARTS			
80	MS24694-S7	. SCREW	0111	0134	19
- 80A		. DELETED-NOT USED			
81	NAS1149DN832H	. WASHER	0111	0134	19
82	MS20365-832	. NUT	0111	0134	19
- 82A	MS21044N08	. NUT ALT FOR MS20365-832	0111	0134	19
		—*—			
83	5514776-42	. INNER WINDOW-WIDE CABIN DOOR	0111	0351	01
- 84	6519516-2	. FROST PANE FSO 6519516-3	0352	0392	NP
84A	6519516-3	. FROST PANE-REFER TO NOTE 1	0393	& ON	01
		ATTACHING PARTS			
85	AN525-832R6	. SCREW-REFER TO NOTE 2	0352	& ON	04
86	MS21047L08	. NUTPLATE-REFER TO NOTE 2	0352	& ON	04
		—*—			
87	6519516-1	. CLOSEOUT RING-REFER TO NOTE 2	0352	& ON	01
88	6311123-12	. WINDOW ASSY-WIDE CABIN DOOR WITH FROST PANE FSO 6311123-202, 6311123-205, 6311123-207 OR 6311123-208	0465	& ON	NP R
		ATTACHING PARTS			
89	HL19PB5-4	. PIN-HI-LOK	0465	& ON	19
90	MS21043-08	. NUT	0465	& ON	19
- 90A	NAS1291C08	. NUT ALT FOR MS21043-08	0465	& ON	19
91	NAS1149FN816P	. WASHER	0465	& ON	19
		—*—			
92	9912207-8	. . WINDOW-WIDE DOOR	0465	& ON	01
93	6319054-3	. . FROST PANE - DOOR	0465	& ON	01
94	6319054-1	. . FROST PANE SEAL - DOOR	0465	& ON	01
95	6211260-6	. SEAL	0465	& ON	01
96	6511211-31	. ANGLE	0465	& ON	01
97	5511160-42	. DOUBLER-WINDOW FSO 6511698-2	0465	& ON	NP
- 98	6311123-202	. WINDOW ASSY-WIDE CABIN DOOR WITH FROST PANE FSO 6311123-208	0260 0752	0750 & ON	NP R
- 98A	6311123-207	. WINDOW ASSY-WIDE CABIN DOOR WITH FROST PANE FSO 6311123-208	0260 0752	0750 & ON	NP R
- 98B	6311123-208	. WINDOW ASSY-WIDE CABIN DOOR WITH FROST PANE	0260 0752	0750 & ON	01 R
- 99	9912207-8	. . WINDOW-WIDE DOOR	0465	& ON	01
- 100	6211260-6	. . SEAL	0465	& ON	01
- 101	5511262-2	. . RETAINER-CABIN DOOR WINDOW FSO 5511262-5	0465	& ON	NP R
- 101A	5511262-5	. . RETAINER-CABIN DOOR WINDOW	0260 0752	0750 & ON	01 R
- 102	6319054-3	. . FROST PANE - DOOR	0465	& ON	01
- 103	6319054-1	. . FROST PANE SEAL - DOOR	0465	& ON	01
104	6511698-2	. WINDOW DOUBLER	0651	& ON	01
- 105	6511211-31	. ANGLE-WIDE CABIN DOOR	0465	0647	01
- 105A	6511211-55	. ANGLE ASSY-WIDE CABIN DOOR	0648	& ON	01
106	6511700-13	. ANGLE-WIDE CABIN DOOR	0651	& ON	02

NOTE 1—AIRPLANES -0393 AND ON AND AIRPLANES -0539 AND ON INCORPORATING SB560-52-21.

NOTE 2—AIRPLANES -0352 AND ON AND AIRPLANES -0539 AND ON INCORPORATING SB560-52-21.

- ITEM NOT ILLUSTRATED

CHAPTER SECTION SUBJECT		NUMBER OF PAGES	DATE
57 - TITLE			
57 - LIST OF EFFECTIVE PAGES			
57 - RECORD OF TEMPORARY REVISIONS			
57 - TABLE OF CONTENTS			
57-10-01	Figure 01	8	Mar 1/2011
57-10-01	Figure 02	6	Feb 1/2007
57-10-01	Figure 03	6	Feb 1/2009
57-10-02	Figure 01	4	Mar 1/2010
57-10-02	Figure 02	4	Aug 1/2013
57-10-03	Figure 01	4	Mar 1/2010
57-10-03	Figure 02	2	Aug 1/2013
57-10-04	Figure 01	2	Aug 1/2007
57-20-00	Figure 01	2	Aug 1/2007
57-20-00	Figure 02	2	Aug 1/2006
57-20-01	Figure 01	4	Feb 1/2008
57-20-01	Figure 02	2	Nov 1/2001
57-20-02	Figure 01	4	Apr 5/2005
57-20-02	Figure 02	2	Apr 5/2005
57-30-00	Figure 01	4	Mar 1/2010
57-30-00	Figure 02	2	Mar 1/2010
57-30-00	Figure 03	2	Mar 1/2010
57-30-00	Figure 04	2	Feb 1/2009
57-40-00	Figure 01	8	Mar 1/2011
57-40-00	Figure 02	2	Mar 1/2010
57-40-00	Figure 03	2	Mar 1/2010
57-40-01	Figure 01	2	Mar 1/2010
57-50-00	Figure 01	14	Aug 1/2015
57-50-00	Figure 02	6	Aug 1/2015
57-50-01	Figure 01	4	Apr 5/2005
57-50-01	Figure 02	2	Aug 1/2007
57-60-00	Figure 01	4	Aug 1/2013
57-70-00	Figure 01	2	Mar 1/2011

© Cessna Aircraft Company

SUBJECT	CHAPTER SECTION SUBJECT	FIGURE	EFFECTIVITY START	EFFECTIVITY END
WING CENTER SECTION	57-10-01	01	0001	0538
WING FORWARD CENTER SECTION	57-10-01	02	0539	& ON
WING AFT CENTER SECTION	57-10-01	03	0539	& ON
WING SPAR - MAIN	57-10-02	01	0001	0538
WING SPAR - MAIN	57-10-02	02	0539	& ON
WING SPAR - AFT	57-10-03	01	0001	0538
WING SPAR - AFT	57-10-03	02	0539	& ON
WING MAIN LANDING GEAR FAIRINGS	57-10-04	01	0539	& ON
WING ACCESS PANELS	57-20-00	01	0001	0538
WING ACCESS PANELS	57-20-00	02	0539	& ON
WING SKINS	57-20-01	01	0001	0538
WING SKINS	57-20-01	02	0539	& ON
WING ATTACH FITTINGS	57-20-02	01	0001	0538
WING ATTACH AND COMPONENTS	57-20-02	02	0539	& ON
WING TIP ASSEMBLY	57-30-00	01	0001	0256
WING TIP ASSEMBLY	57-30-00	02	0257	0259
WING TIP ASSEMBLY	57-30-00	03	0260	0538
WING TIP ASSEMBLY	57-30-00	04	0539	& ON
WING LEADING EDGE	57-40-00	01	0001	0538
WING LEADING EDGE - OUTBOARD	57-40-00	02	0539	& ON
WING LEADING EDGE - INBOARD	57-40-00	03	0539	& ON
FUEL CLOSURE - WING LEADING EDGE	57-40-01	01	0001	0538
WING TRAILING EDGE	57-50-00	01	0001	0538
WING TRAILING EDGE	57-50-00	02	0539	& ON
FLAP INSTALLATION	57-50-01	01		
FLAP SEALS	57-50-01	02		
AILERON AND TRIM TAB INSTALLATION	57-60-00	01		
SPEED BRAKE	57-70-00	01		

© Cessna Aircraft Company

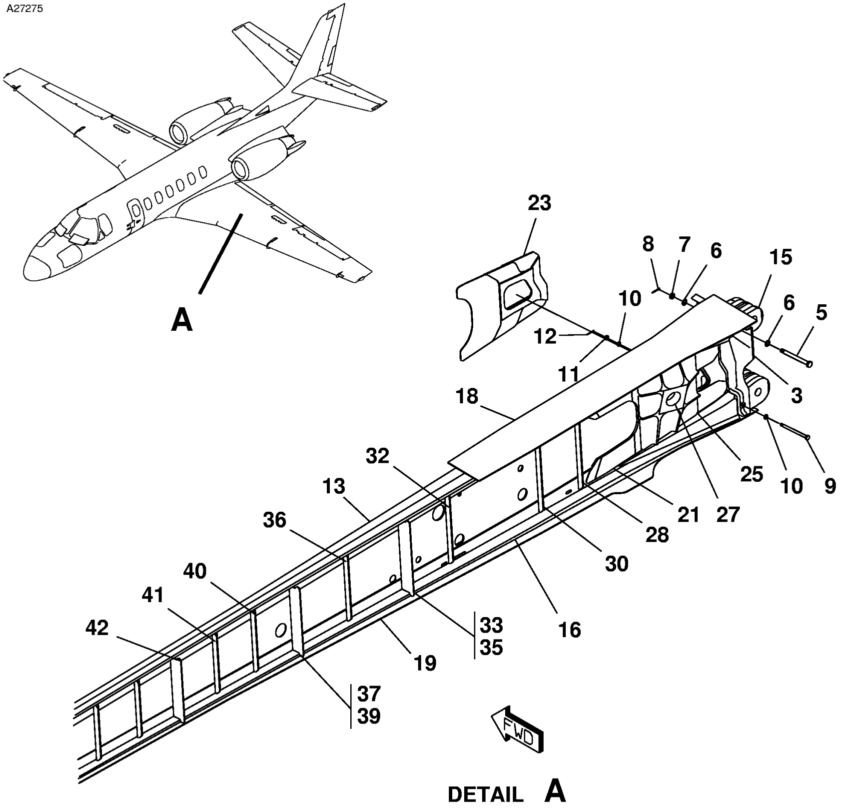

WING SPAR - MAIN
FIGURE 02 (SHEET 1)

FIG ITEM	PART NUMBER	NOMENCLATURE 1 2 3 4 5 6 7			UNITS PER ASSY
02					
-		WING SPAR - MAIN	0539	& ON	RF
- 1	6522621-3	. SPAR ASSY-LH WING MAIN FSO 6522621-5	0539	0542	NP
- 1A	6522621-5	. SPAR ASSY-LH WING MAIN	0543	& ON	01
- 2	6522621-4	. SPAR ASSY-RH WING MAIN FSO 6522621-6	0539	0542	NP
- 2A	6522621-6	. SPAR ASSY-RH WING MAIN	0543	& ON	01
3	6622128-3	. . END FITTING-LH MAIN SPAR			01
- 4	6622128-4	. . END FITTING-RH MAIN SPAR			01
		ATTACHING PARTS			
5	NAS6207-56D	. . BOLT	0539	0542	01
		ATTACHING PARTS			
- 5A	NAS6207-62D	. . BOLT	0543	& ON	01
6	NAS1149C0732R	. . WASHER			AR
7	AN320C7	. . NUT			01
8	MS24665-300	. . COTTER PIN			01
9	NAS6205-56D	. . BOLT	0539	0542	01
- 9A	NAS6205-62D	. . BOLT	0543	& ON	01
10	NAS1149C0532R	. . WASHER			AR
11	AN320C5	. . NUT			01
12	MS24665-153	. . COTTER PIN			01
		—*—			
13	6622122-1	. . SPAR CAP ASSY-UPPER LH			01
- 14	6622122-2	. . SPAR CAP ASSY-UPPER RH			01
15	6511154-9	. . . BUSHING			03
16	6622122-9	. . SPAR CAP ASSY-LOWER LH	0539	0542	01
- 16A	6622122-17	. . SPAR CAP ASSY-LOWER LH	0543	& ON	01
- 17	6622122-10	. . SPAR CAP ASSY-LOWER RH	0539	0542	01
- 17A	6622122-18	. . SPAR CAP ASSY-LOWER RH	0543	& ON	01
18	6622127-1	. . SKIN SPLICE ASSY-UPPER			02
19	6522624-1	. . SKIN SPLICE BOND ASSY-LH LOWER			01
- 20	6522624-2	. . SKIN SPLICE BOND ASSY-RH LOWER			01
21	6622126-1	. . DOUBLER-LH			01
- 22	6622126-2	. . DOUBLER-RH			01
23	6622125-1	. . DOUBLER-LH			01
- 24	6622125-2	. . DOUBLER-RH			01
25	6522640-1	. . FITTING ASSY-LH MAIN GEAR TRUNNION FSO 6522640-201			NP
- 25A	6522640-201	. . FITTING ASSY-LH	0805	& ON	01 R
- 26	6522640-2	. . FITTING ASSY-RH MAIN GEAR TRUNNION FSO 6522640-202			NP
- 26A	6522640-202	. . FITTING ASSY-RH	0805	& ON	01 R
27	ADW20-5N(L)	. . . BEARING V15860			01
28	6522002-19	. . STIFFENER LH			01
- 29	6522002-20	. . STIFFENER RH			01
30	6622120-3	. . STIFFENER-WS 107.80			02
- 31	6522002-18	. . TAPERED FILLER			AR
32	6522002-17	. . STIFFENER			02
33	6522014-9	. . BRACKET-LH			01
- 34	6522014-10	. . BRACKET-RH			01
35	6622120-4	. . SHIM-WS 149.573			02
36	6522002-16	. . STIFFENER			02
37	6522014-39	. . BRACKET LH			01
- 38	6522014-40	. . BRACKET RH			01
39	6622120-5	. . SHIM-WS 131.073			01
40	6522002-15	. . STIFFENER			02
41	6522002-14	. . STIFFENER			02
42	6522014-29	. . BRACKET-LH			02
- 43	6522014-30	. . BRACKET-RH			02

- ITEM NOT ILLUSTRATED

A27276

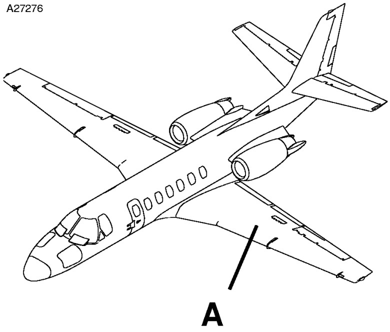

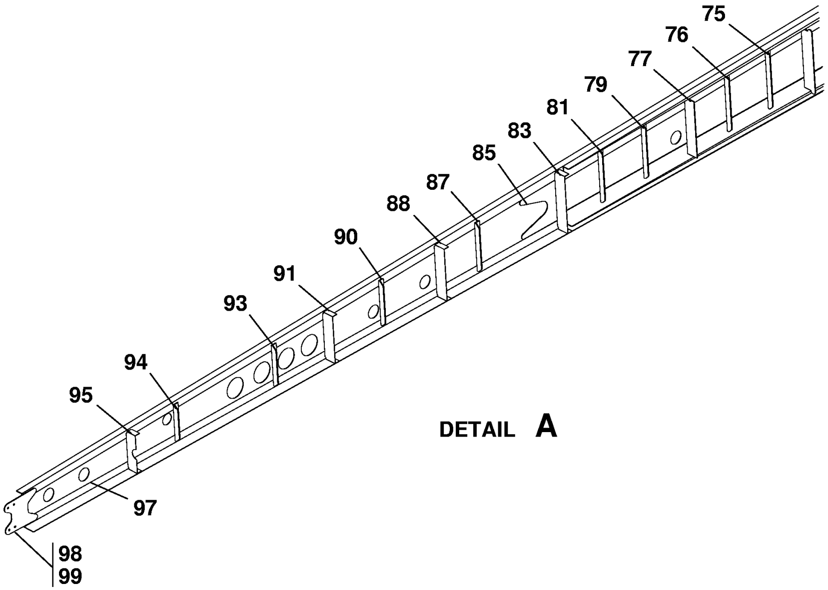

DETAIL A

5610T1049
A5622T1038

WING SPAR - MAIN
FIGURE 02 (SHEET 2)

FIG ITEM	PART NUMBER	NOMENCLATURE 1 2 3 4 5 6 7	UNITS PER ASSY
02			
75	6522002-13	. . STIFFENER	02
76	6522002-12	. . STIFFENER	02
77	6522015-11	. . BRACKET-LH	01
- 78	6522015-12	. . BRACKET-RH	01
79	6522002-9	. . STIFFENER LH	01
- 80	6522002-10	. . STIFFENER RH	01
81	6522002-7	. . STIFFENER LH	01
- 82	6522002-8	. . STIFFENER RH	01
83	6522015-21	. . BRACKET-LH	01
- 84	6522015-22	. . BRACKET-RH	01
85	6522622-1	. . WEB BOND ASSY-LH BONDED	01
- 86	6522622-2	. . WEB BOND ASSY-RH BONDED	01
87	6522002-6	. . STIFFENER	02
88	6522015-31	. . BRACKET-LH	01
- 89	6522015-32	. . BRACKET-RH	01
90	6522002-5	. . STIFFENER	02
91	6522015-41	. . BRACKET-LH	01
- 92	6522015-42	. . BRACKET-RH	01
93	6522002-4	. . STIFFENER	02
94	6522002-3	. . STIFFENER	02
95	6522016-7	. . BRACKET LH	01
- 96	6522016-8	. . BRACKET RH	01
97	6622121-7	. . WEB-OUTBD	02
98	6622121-8	. . SPLICE PLATE	02
99	6622121-9	. . FILLER	02

- ITEM NOT ILLUSTRATED

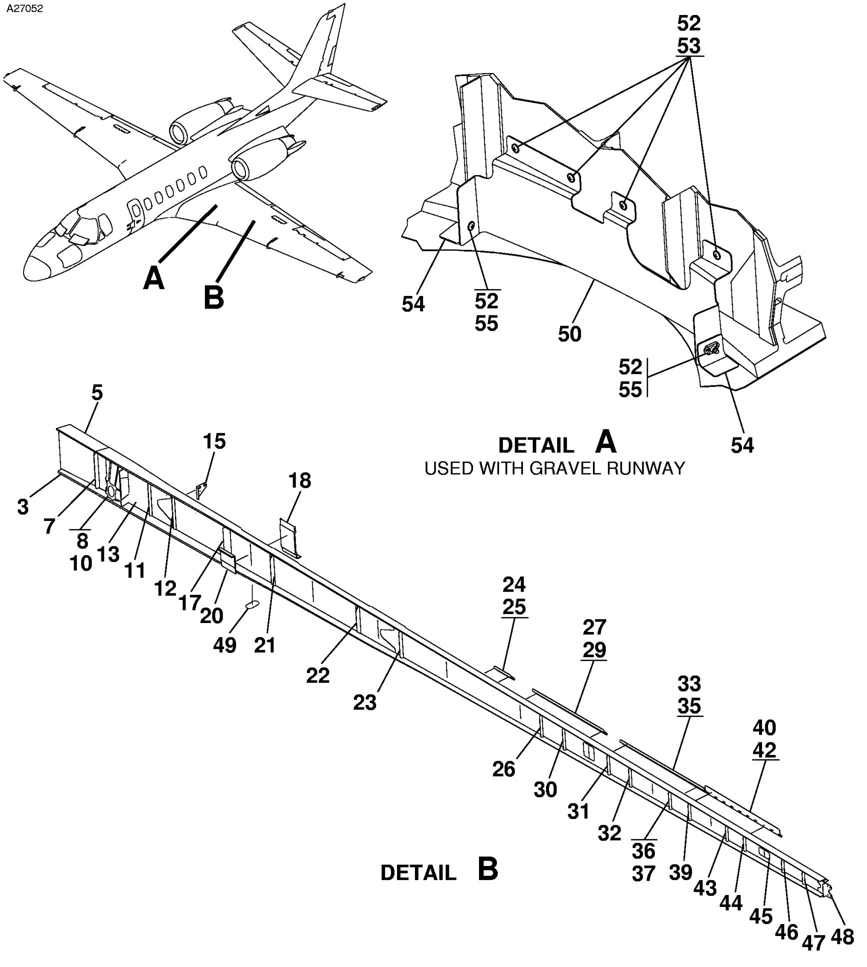

WING SPAR - AFT
FIGURE 02 (SHEET 1)

FIG ITEM	PART NUMBER	NOMENCLATURE 1 2 3 4 5 6 7			UNITS PER ASSY
02					
-		WING SPAR - AFT	0539	& ON	RF
- 1	6522631-1	. SPAR ASSY-LH AFT FSO 6522631-3	0539	0542	NP
- 1A	6522631-3	. SPAR ASSY-LH AFT	0543	& ON	01
- 2	6522631-2	. SPAR ASSY-RH AFT FSO 6522631-4	0539	0542	NP
- 2A	6522631-4	. SPAR ASSY-RH AFT	0543	& ON	01
3	6522639-3	. . SPAR CAP-REAR OUTBOARD LOWER LH			01
- 4	6522639-4	. . SPAR CAP-REAR OUTBOARD LOWER RH			01
5	6522632-3	. . SPAR CAP-REAR OUTBOARD UPPER LH			01
- 6	6522632-4	. . SPAR CAP-REAR OUTBOARD UPPER RH			01
7	6621151-15	. . ANGLE - SPAR			02
8	6522634-5	. . FITTING ASSY-LH MAIN LANDING GEAR TRUNNION FSO 6522634-201			NP
- 8A	6522634-201	. . FITTING ASSY-LH MAIN LANDING GEAR TRUNNION	0805	& ON	01 R
- 9	6522634-6	. . FITTING ASSY-RH MAIN LANDING GEAR TRUNNION FSO 6522634-202			NP
- 9A	6522634-202	. . FITTING ASSY-RH MAIN LANDING GEAR TRUNNION	0805	& ON	01 R
10	ADW16N-L	. . . BEARING V15860			01
11	6622131-6	. . STIFFENER WS 101.52			02
12	6622131-11	. . STIFFENER WS 108.66			02
13	6522635-1	. . REAR SPAR WEB ASSY LH			01
- 14	6522635-2	. . REAR SPAR WEB ASSY RH			01
15	6522027-53	. . BRACKET-LH			01
- 16	6522027-54	. . BRACKET-RH			01
17	6522027-7	. . STIFFENER			02
18	6522029-3	. . FITTING-LH JACKPAD AND ACTUATOR SUPPORT			01
- 19	6522029-4	. . FITTING-RH JACKPAD AND ACTUATOR SUPPORT			01
20	6522023-8	. . ANGLE			02
21	6522027-8	. . STIFFENER			02
22	6522027-9	. . STIFFENER			02
23	6522027-10	. . STIFFENER			02
24	6622013-1	. . SEAL ANGLE ASSY			02
25	MS21069L08	. . . NUTPLATE			03
26	6522027-13	. . STIFFENER			02
27	6622013-3	. . SEAL ANGLE ASSY-LH			01
- 28	6622013-4	. . SEAL ANGLE ASSY-RH			01
29	MS21069L08	. . . NUTPLATE			09
30	6522027-14	. . STIFFENER			02
31	6522027-15	. . STIFFENER			02
32	6522027-16	. . STIFFENER			02
33	6622013-5	. . SEAL ANGLE ASSY-LH			01
- 34	6622013-6	. . SEAL ANGLE ASSY-RH			01
35	MS21069L08	. . . NUTPLATE			11
36	6522027-17	. . STIFFENER			02
37	6622131-19	. . BRACKET - LH			01
- 38	6622131-20	. . BRACKET - RH			01
39	6522027-18	. . STIFFENER			02
40	6622013-7	. . SEAL ANGLE ASSY-LH			01
- 41	6622013-8	. . SEAL ANGLE ASSY-RH			01
42	MS21069L08	. . . NUTPLATE			10
43	6522027-19	. . STIFFENER			02
44	6522027-20	. . STIFFENER			02
45	6522027-25	. . FILLER			02
46	6522027-21	. . STIFFENER			02
47	6522027-22	. . STIFFENER			02
48	6622131-12	. . SPLICE PLATE			02
49	6322000-16	. JACK PAD			02
50	6500134-3	. SPAR PROTECTOR-LH USED WITH GRAVEL RUNWAY INSTL	0569	& ON	01
- 51	6500134-4	. SPAR PROTECTOR-RH USED WITH GRAVEL RUNWAY INSTL	0569	& ON	01
		ATTACHING PARTS			
52	AN525-832R8	. SCREW	0569	& ON	06
53	MS21075L08N	. NUTPLATE-LH AND RH USED WITH GRAVEL RUNWAY INSTL	0569	& ON	04
54	6500134-5	. CLIP-LH AND RH USED WITH GRAVEL RUNWAY INSTL	0569	& ON	02
55	MS21075L08N	. NUTPLATE-LH AND RH USED WITH GRAVEL RUNWAY INSTL	0569	& ON	02

- ITEM NOT ILLUSTRATED

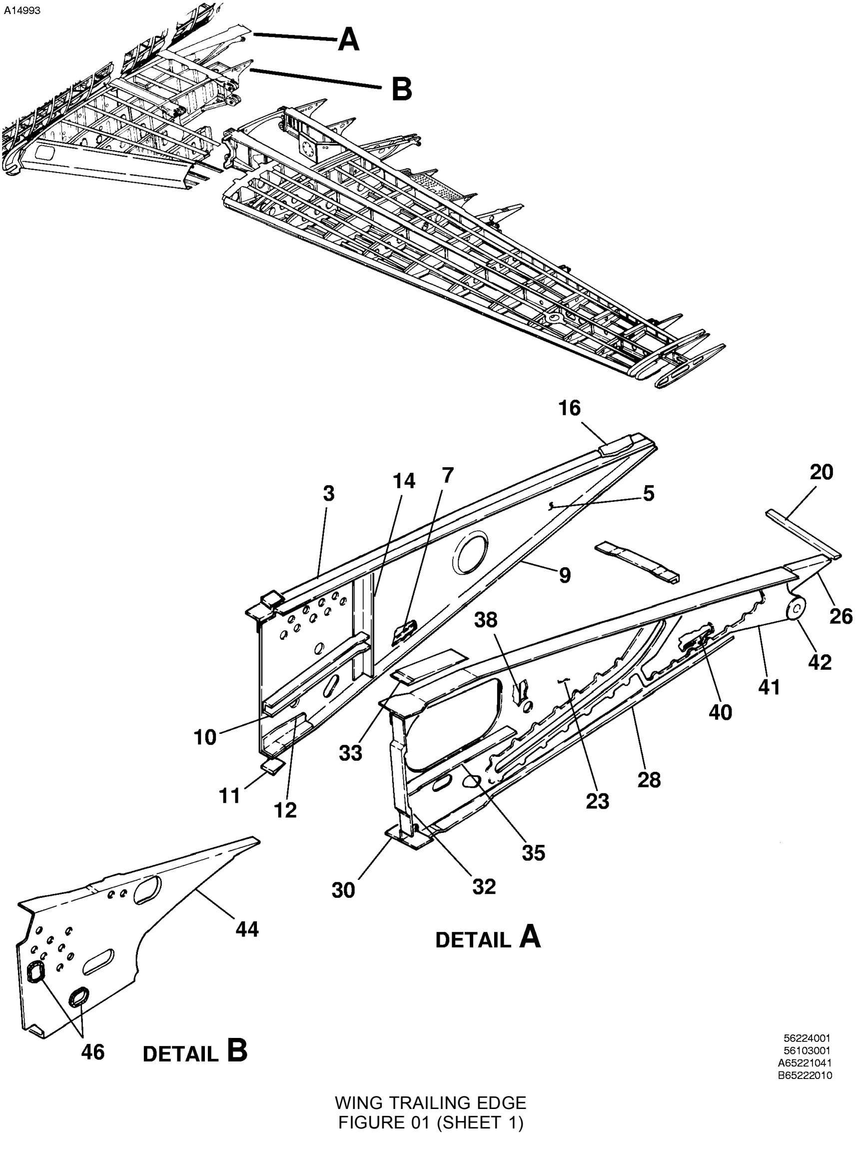

WING TRAILING EDGE
FIGURE 01 (SHEET 1)

FIG ITEM	PART NUMBER	NOMENCLATURE 1 2 3 4 5 6 7			UNITS PER ASSY
01					
-		WING TRAILING EDGE	0001	0538	RF
- 1	6522058-3	. STRUCTURE ASSY 0FLAP ISLAND LH INBOARD	0001	0095	01
- 1A	6522058-87	. STRUCTURE ASSY LH-INBOARD FLAP ISLAND FSO 6522058-101	0096	0203	NP
- 1B	6522058-101	. STRUCTURE ASSY LH-INBOARD FLAP ISLAND	0204	0264	01
- 1C	6522058-97	. STRUCTURE ASSY LH-INBOARD FLAP ISLAND	0265	0493	01
- 1D	6522058-105	. STRUCTURE ASSY LH-INBOARD FLAP ISLAND	0494	0537	01
- 1E	6522058-107	. STRUCTURE ASSY LH-INBOARD FLAP ISLAND	0538	0538	01
- 2	6522058-4	. STRUCTURE ASSY-RH INBOARD FLAP ISLAND	0001	0095	01
- 2A	6522058-88	. STRUCTURE ASSY RH-INBOARD FLAP ISLAND FSO 6522058-100	0096	0203	NP
- 2B	6522058-100	. STRUCTURE ASSY RH-RH INBOARD FLAP ISLAND	0204	0264	01
- 2C	6522058-96	. STRUCTURE ASSY RH-RH INBOARD FLAP ISLAND RH INBOARD	0265	0493	01
- 2D	6522058-106	. STRUCTURE ASSY RH-INBOARD FLAP ISLAND	0494	0537	01
- 2E	6522058-108	. STRUCTURE ASSY RH-INBOARD FLAP ISLAND	0538	0538	01
3	6522058-81	. . CAP ASSY, LH-UPPER BL29.50 FSO 6522058-89	0001	0264	NP
- 3A	6522058-89	. . CAP BOND ASSY LH-UPPER BL29.50	0265	0538	01
- 4	6522058-82	. . CAP ASSY, RH-UPPER BL29.50 FSO 6522058-90	0001	0264	NP
- 4A	6522058-90	. . CAP BOND ASSY RH-UPPER BL29.50	0265	0538	01
5	6522058-75	. . RIB LH			01
- 6	6522058-76	. . RIB RH			01
7	6522058-31	. . CAP LOWER LH-INBOARD			01
- 8	6522058-32	. . CAP LOWER RH-INBOARD			01
9	6522058-26	. . STRAP-LOWER OUTBOARD			01
10	6522058-49	. . STIFFENER-FORWARD			01
11	6522058-43	. . FILLER-LOWER			01
12	6522058-53	. . ANGLE LH-LOWER FORWARD			01
- 13	6522058-54	. . ANGLE RH-LOWER FORWARD			01
14	6522058-67	. . STIFFENER LH			01
- 15	6522058-68	. . STIFFENER RH			01
16	6511034-91	. . STRAP-SPLICE UPPER LH			01
- 17	6511034-92	. . STRAP-SPLICE LOWER RH			01
- 18	6522058-45	. . ANGLE LH BL29.50 TO WS31.58			01
- 19	6522058-44	. . ANGLE RH BL29.50 TO WS31.58			01
20	6522058-79	. . TRAILING EDGE BL29.50 TO WS31.58			01
- 21	6522058-5	. . CAP UPPER LH WS31.58			01
- 22	6522058-6	. . CAP UPPER RH WS31.58			01
23	6522058-77	. . WEB FWD LH WEB-LH FORWARD			01
- 24	6522058-78	. . WEB FWD RH WEB-RH FORWARD			01
- 25	MS21059L08	. . NUTPLATE			04
26	6522058-7	. . WEB AFT LH			01
- 27	6522058-8	. . WEB AFT RH			01
28	6522058-63	. . CAP-OUTBOARD LOWER LH			01
- 29	6522058-62	. . CAP-OUTBOARD LOWER RH			01
30	6522058-85	. . CLIP-LH LOWER CAP			01
- 31	6522058-86	. . CLIP-RH LOWER CAP			01
32	6522058-64	. . ANGLE-FORWARD FSO 6522058-102	0001	0264	NP
- 32A	6522058-102	. . ANGLE-FORWARD	0265	0538	01
33	6522058-21	. . FILLER LH			01
- 34	6522058-22	. . FILLER RH			01
35	6522058-65	. . STIFFENER ASSY LH			01
- 36	6522058-66	. . STIFFENER ASSY RH			01
- 37	MS21071L3	. . . NUTPLATE			02
38	6522058-13	. . STIFFENER LH			01
- 38A	6522058-99	. . STIFFENER ASSY LH			01
- 39	6522058-14	. . STIFFENER RH	0001	0203	01
- 39A	6522058-98	. . STIFFENER ASSY RH-RH	0204	0538	01
40	6522058-25	. . RADIUS BLOCK			01
41	6522060-1	. . TRACK INBOARD	0001	0493	01
- 41A	6522060-3	. . TRACK INBOARD FSO 6522060-201 AND 6522060-202	0494	0538	NP R
- 41B	6522060-201	. . TRACK INBOARD-LH FOR SPARES ONLY			01 R
- 41C	6522060-202	. . TRACK INBOARD-RH FOR SPARES ONLY			01 R
42	6525124-5	. . BUSHING-FLAP BEARING			01
- 43		. . SKIN-UPPER AND LOWER-REFER TO 57-20-01 FIGURE 01			RF
44	6511174-13	. RIB-TRAILING EDGE LH WS54.07 FSO 6511174-17	0001	0202	NP
- 44A	6511174-17	. RIB-TRAILING EDGE LH WS54.07	0203	0538	01
- 45	6511174-14	. RIB-TRAILING EDGE RH WS54.07 FSO 6511174-18	0001	0202	NP
- 45A	6511174-18	. RIB-TRAILING EDGE RH WS54.07	0203	0538	01
46	S1050-2	. GROMMET			AR

- ITEM NOT ILLUSTRATED

A14996

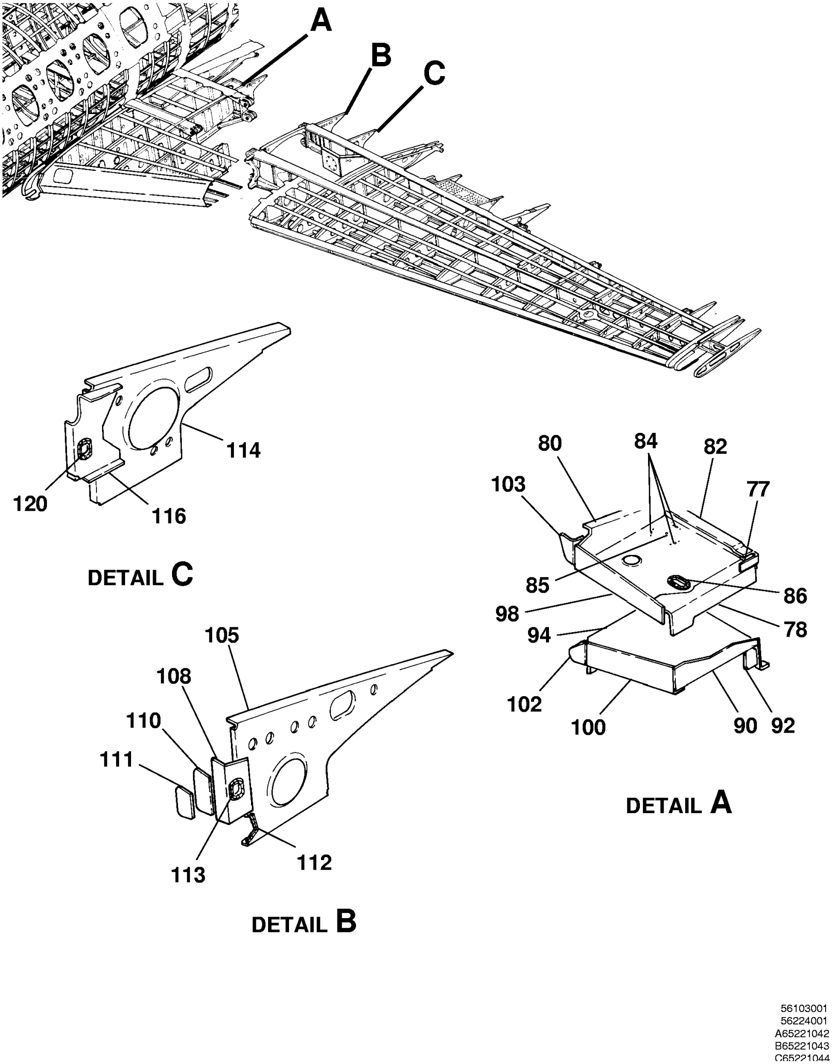

WING TRAILING EDGE
FIGURE 01 (SHEET 2)

FIG ITEM	PART NUMBER	NOMENCLATURE 1 2 3 4 5 6 7			UNITS PER ASSY
01					
- 75	6565051-3	. BRACKET ASSY-LH BELLCRANK MOUNT WS46.67			01
- 76	6565051-4	. BRACKET ASSY-RH BELLCRANK MOUNT WS46.67			01
77	6565051-25	. . ANGLE			02
78	6565051-59	. . ANGLE LH			01
- 79	6565051-60	. . ANGLE RH			01
80	6565051-55	. . SUPPORT UPPER LH			01
- 81	6565051-56	. . SUPPORT UPPER RH			01
82	6565051-57	. . DOUBLER UPPER LH			01
- 83	6565051-58	. . DOUBLER UPPER RH			01
84	MS21047L4	. . NUTPLATE			03
85	NAS1773-4	. . NUTPLATE			01
86	S1050-3	. . GROMMET 4.42 IN LG BKI			AR
- 87	S1050-3	. . GROMMET 2.98 IN LG BKI			AR
- 88	6565051-5	. BRACKET ASSY-LH LOWER	0001	0512	01
- 88A	6565051-63	. BRACKET ASSY-LH LOWER	0513	0538	01
- 89	6565051-6	. BRACKET ASSY-RH LOWER	0001	0512	01
- 89A	6565051-64	. BRACKET ASSY-RH LOWER	0513	0538	01
90	6565051-15	. . SUPPORT LOWER LH			01
- 91	6565051-16	. . SUPPORT LOWER RH			01
92	6565051-21	. . CLIP LH			01
- 93	6565051-22	. . CLIP RH			01
94	6565051-37	. . DOUBLER LOWER LH			01
- 95	6565051-38	. . DOUBLER LOWER RH			01
- 96	MS21047L4	. . NUTPLATE			03
- 97	S1050-2-3.47	. . GROMMET			01
98	6565051-7	. TEE UPPER LH			01
- 99	6565051-8	. TEE UPPER RH			01
100	6565051-9	. TEE LOWER LH			01
- 101	6565051-10	. TEE LOWER RH			01
102	6565051-23	. ANGLE			02
103	6565051-24	. ANGLE			02
- 104	6511149-10	. DOUBLER-SPLICE LH AND RH WS54.07 - WS66.07			02
105	6511151-13	. RIB ASSY-LH TRAILING EDGE WS66.07			01
- 106	6511151-14	. RIB ASSY-RH TRAILING EDGE WS66.07			01
- 107	MS21059L3	. . NUTPLATE			01
108	6511151-7	. ANGLE LH			01
- 109	6511151-8	. ANGLE RH			01
110	6511151-9	. SHIM-LH AND RH			02
111	6511151-10	. SHIM SHIM-LH AND RH			02
112	S1050-2	. GROMMET GROMMET-LH AND RH 1.75 IN LG BKI			AR
113	S1050-2	. GROMMET GROMMET-LH AND RH 3.35 IN LG BKI			AR
114	6522063-13	. RIB-LH TRAILING EDGE WS81.30			01
- 115	6522063-14	. RIB-RH TRAILING EDGE WS81.30			01
116	6522063-11	. STIFFENER LH-LH FSO 6522063-15	0001	0306	NP
- 117	6522063-15	. STIFFENER LH-LH	0307	0538	01
- 118	6522063-12	. STIFFENER RH-RH FSO 6522063-16	0001	0306	NP
- 119	6522063-16	. STIFFENER RH-RH	0307	0538	01
120	S1050-1	. GROMMET-LH AND RH 3.80 IN LG BKI			AR

- ITEM NOT ILLUSTRATED

A14998

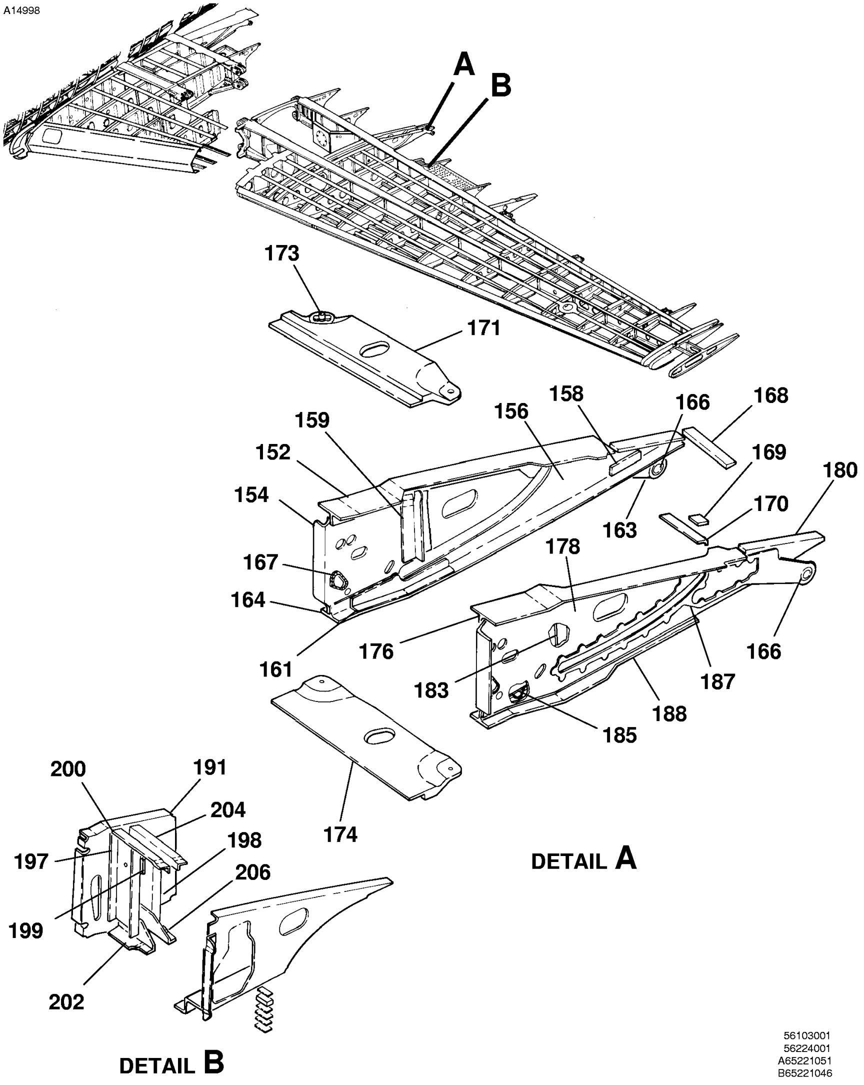

WING TRAILING EDGE
FIGURE 01 (SHEET 3)

FIG ITEM	PART NUMBER	NOMENCLATURE 1 2 3 4 5 6 7			UNITS PER ASSY
01					
- 150	6522036-69	. STRUCTURE ASSY-FLAP ISLAND LH CENTER	0001	0493	01
- 150A	6522036-71	. STRUCTURE ASSY-FLAP ISLAND LH CENTER	0494	0512	01
- 150B	6522036-83	. STRUCTURE ASSY-FLAP ISLAND LH CENTER	0513	0538	01
- 151	6522036-70	. STRUCTURE ASSY-FLAP ISLAND RH CENTER	0001	0493	01
- 151A	6522036-72	. STRUCTURE ASSY-FLAP ISLAND RH CENTER	0494	0512	01
- 151B	6522036-84	. STRUCTURE ASSY-FLAP ISLAND RH CENTER	0513	0538	01
152	6522036-13	. . CAP INBD UPR LH WS104.57			01
- 153	6522036-14	. . CAP INBD UPR RH WS104.57			01
154	6522036-63	. . RIB INBD FWD LH			01
- 155	6522036-64	. . RIB INBD FWD RH			01
156	6522036-7	. . RIB INBD AFT LH			01
- 157	6522036-8	. . RIB INBD AFT RH			01
158	6522037-16	. . RADIUS FILLER INBOARD AFT RIB			01
159	6522036-57	. . STIFFENER-INBOARD RIB LH			01
- 160	6522036-58	. . STIFFENER-INBOARD RIB RH			01
161	6522036-31	. . DOUBLER LH-INBOARD LOWER CAP			01
- 162	6522036-32	. . DOUBLER RH INBOARD LOWER CAP			01
- 162A	MS21047L08	. . . NUTPLATE-LH AND RH			04
163	6522061-1	. . TRACK INBOARD	0001	0493	01
- 163A	6522061-3	. . TRACK INBOARD	0494	0538	01
164	6522036-15	. . CAP INBD LWR LH			01
- 165	6522036-16	. . CAP INBD LWR RH			01
166	6525124-5	. . BUSHING-FLAP BEARING			02
167	S1050-1-3.78	. . GROMMET			01
168	6522036-30	. . FILLER			01
169	6522036-24	. . FILLER			01
170	6522036-29	. . STIFFENER			01
171	6565047-11	. . BRACKET-LH UPPER			01
- 172	6565047-12	. . BRACKET-RH UPPER			01
173	NAS1773-4	. . NUTPLATE-UPPER BRACKET			01
174	6565047-3	. . MOUNTING BRACKET-LH LOWER			01
- 175	6565047-4	. . MOUNTING BRACKET-RH LOWER			01
176	6522036-17	. . CAP-LH OUTBOARD UPPER WS107.90			01
- 177	6522036-18	. . CAP-RH OUTBOARD UPPER WS107.90			01
178	6522036-65	. . RIB OUTBD FWD LH			01
- 179	6522036-66	. . RIB OUTBD FWD RH			01
180	6522036-11	. . RIB OUTBD AFT LH			01
- 181	6522036-12	. . RIB OUTBD AFT RH			01
- 182	6522037-40	. . RADIUS FILLER OUTBOARD AFT RIB			01
183	6522036-27	. . STIFFENER-OUTBOARD RIB LH			01
- 184	6522036-28	. . STIFFENER-OUTBOARD RIB RH			01
185	6522036-33	. . DOUBLER LH-OUTBOARD LOWER CAP			01
- 186	6522036-34	. . DOUBLER RH-OUTBOARD LOWER CAP			01
187	6522060-2	. . TRACK OUTBOARD	0001	0493	01
- 187A	6522060-4	. . TRACK OUTBOARD	0494	0538	01
188	6522036-19	. . CAP OUTBD LWR LH			01
- 189	6522036-20	. . CAP OUTBD LWR RH			01
- 190		. . SKINS-REFER TO 57-20-01 FIGURE 01			RF
191	6565042-45	. RIB-LH SPEED BRAKE ACTUATOR WS128.00			01
- 192	6565042-46	. RIB-RH SPEED BRAKE ACTUATOR WS128.00			01
- 193	6565042-3	. ATTACH ASSY FWD LH			01
- 194	6565042-4	. ATTACH ASSY FWD RH			01
- 195	6565042-35	. ATTACH ASSY AFT LH			01
- 196	6565042-36	. ATTACH ASSY AFT RH			01
197	6565042-15	. . RIB-ACTUATOR ATTACH FORWARD			01
198	6565042-17	. . RIB-ACTUATOR ATTACH AFT			01
199	6565042-44	. . SPACER			01
200	6565042-7	. UPPER ANGLE FWD LH			01
- 201	6565042-8	. UPPER ANGLE FWD RH			01
202	6565042-9	. LOWER ANGLE FWD LH			01
- 203	6565042-10	. LOWER ANGLE FWD RH			01
204	6565042-11	. UPPER ANGLE AFT LH			01
- 205	6565042-12	. UPPER ANGLE AFT RH			01
206	6565042-13	. LOWER ANGLE AFT LH			01
- 207	6565042-14	. LOWER ANGLE AFT RH			01

- ITEM NOT ILLUSTRATED

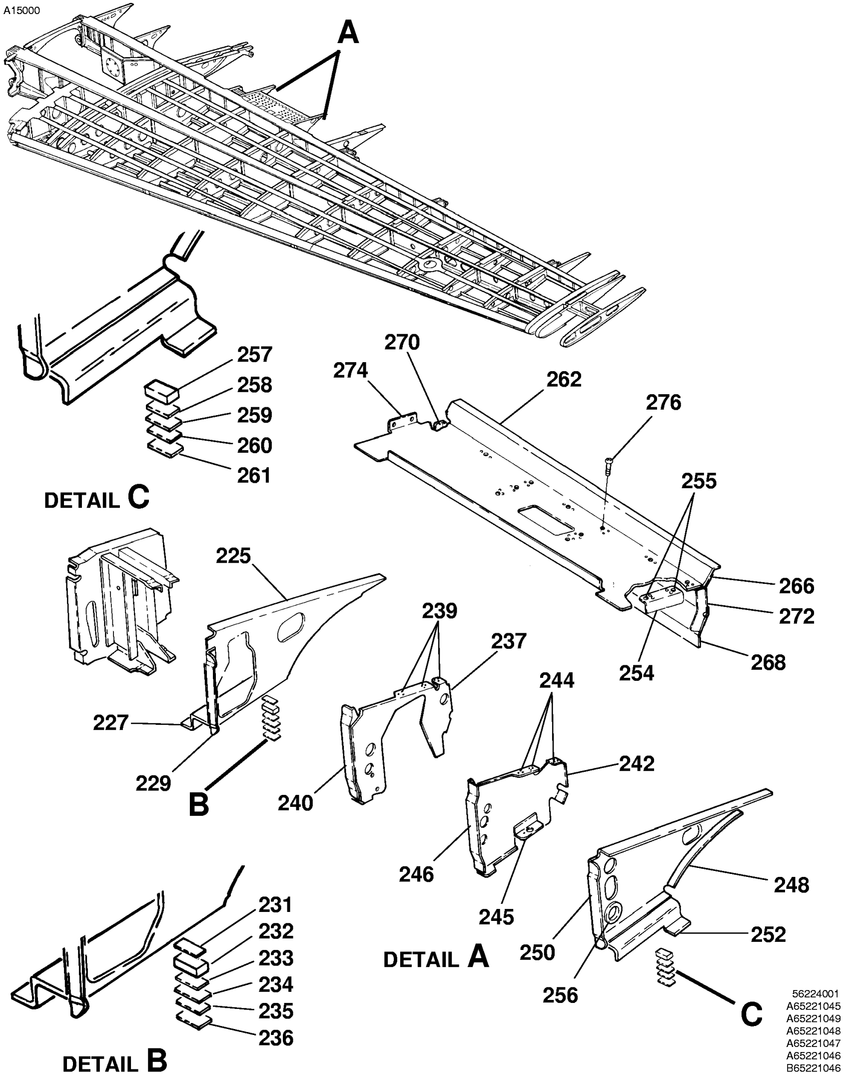

WING TRAILING EDGE
FIGURE 01 (SHEET 4)

FIG ITEM	PART NUMBER	NOMENCLATURE 1 2 3 4 5 6 7			UNITS PER ASSY
01					
225	6565042-31	. RIB ASSY LH RIB ASSY-LH SPEED BRAKE SUPPORT WS133.07			01
- 226	6565042-32	. RIB ASSY RH RIB ASSY-RH SPEED BRAKE SUPPORT WS133.07			01
227	6565042-21	. BRACKET-RIB LH			01
- 228	6565042-22	. RIB BRACKET RH BRACKET-RIB RH			01
229	6565042-37	. ANGLE-LH			01
- 230	6565042-38	. ANGLE RH			01
231	6565042-43	. SHIM-LH AND RH			02
232	5525500-9	. BLOCK-LH AND RH			AR
233	5525500-11	. SHIM-LH AND RH			AR
234	5525500-12	. SHIM-LH AND RH			AR
235	5525500-13	. SHIM-LH AND RH			AR
236	5525500-14	. SHIM-LH AND RH			AR
237	6522065-11	. RIB ASSY LH WS141.72			01
- 238	6522065-12	. RIB ASSY RH WS141.72			01
239	MS21086L08	. . NUTPLATE			03
240	6522065-15	. STIFFENER LH			01
- 241	6522065-16	. STIFFENER RH			01
242	6522065-5	. RIB ASSY LH WS149.07	0001	0512	01
- 242A	6522065-47	. RIB ASSY LH WS149.07	0513	0538	01
- 243	6522065-6	. RIB ASSY RH WS149.07	0001	0512	01
- 243A	6522065-48	. RIB ASSY RH WS149.07	0513	0538	01
244	MS21086L08	. . NUTPLATE			03
245	6522065-27	. . CLIP			01
246	6522065-13	. STIFFENER LH			01
- 247	6522065-14	. STIFFENER RH			01
248	6522065-33	. RIB LH WS157.07 FSO 6522065-49	0002	0260	NP
- 248A	6522065-35	. RIB LH WS157.07 FSO 6522065-49	0261	0512	NP
- 248B	6522065-49	. RIB LH WS157.07	0513	0538	01
- 249	6522065-32	. RIB RH WS157.07 FSO 6522065-50	0002	0260	NP
- 249A	6522065-34	. RIB RH WS157.07 FSO 6522065-50	0261	0512	NP
- 249B	6522065-50	. RIB RH WS157.07	0513	0538	01
250	6522065-21	. CLIP LH-STIFFENER			01
- 251	6522065-22	. CLIP RH-STIFFENER			01
252	6522065-23	. ZEE LH			01
- 253	6522065-24	. ZEE RH			01
254	6522065-25	. ANGLE ASSY-LH AND RH INBOARD			02
255	MS21086L08	. . NUTPLATE			02
256	S1050-1-2.36	. GROMMET-LH AND RH			02
257	5525500-9	. BLOCK-LH AND RH			AR
258	5525500-11	. SHIM-LH AND RH			AR
259	5525500-12	. SHIM-LH AND RH			AR
260	5525500-13	. SHIM-LH AND RH			AR
261	5525500-14	. SHIM-LH AND RH			AR
262	6522066-15	. Z-PAN ASSY LH-UPPER SPEED BRAKE			01
- 263	6522066-16	. Z-PAN ASSY RH-UPPER SPEED BRAKE			01
- 264	MS21069L08	. . NUTPLATE			03
- 265	MS21069L08	. . NUTPLATE			02
266	6522066-7	. CLOSURE PAN-LH			01
- 267	6522066-8	. CLOSURE PAN-RH			01
268	6522066-5	. Z-PAN LH-LOWER			01
- 269	6522066-6	. Z-PAN RH-LOWER			01
270	6522066-11	. CLIP LH INBOARD			01
- 271	6522066-12	. CLIP RH INBOARD			01
272	6522066-13	. CLIP LH OUTBOARD			01
- 273	6522066-14	. CLIP RH OUTBOARD			01
274	6522066-19	. SEAL PAN LH FSO 6522066-21			NP
- 274A	6522066-21	. SEAL PAN LH			01
- 275	6522066-20	. SEAL PAN RH FSO 6522066-22			NP
- 275A	6522066-22	. SEAL PAN RH			01
		ATTACHING PARTS			
276	MS27039-0806	. SCREW			15
		—*—			

- ITEM NOT ILLUSTRATED

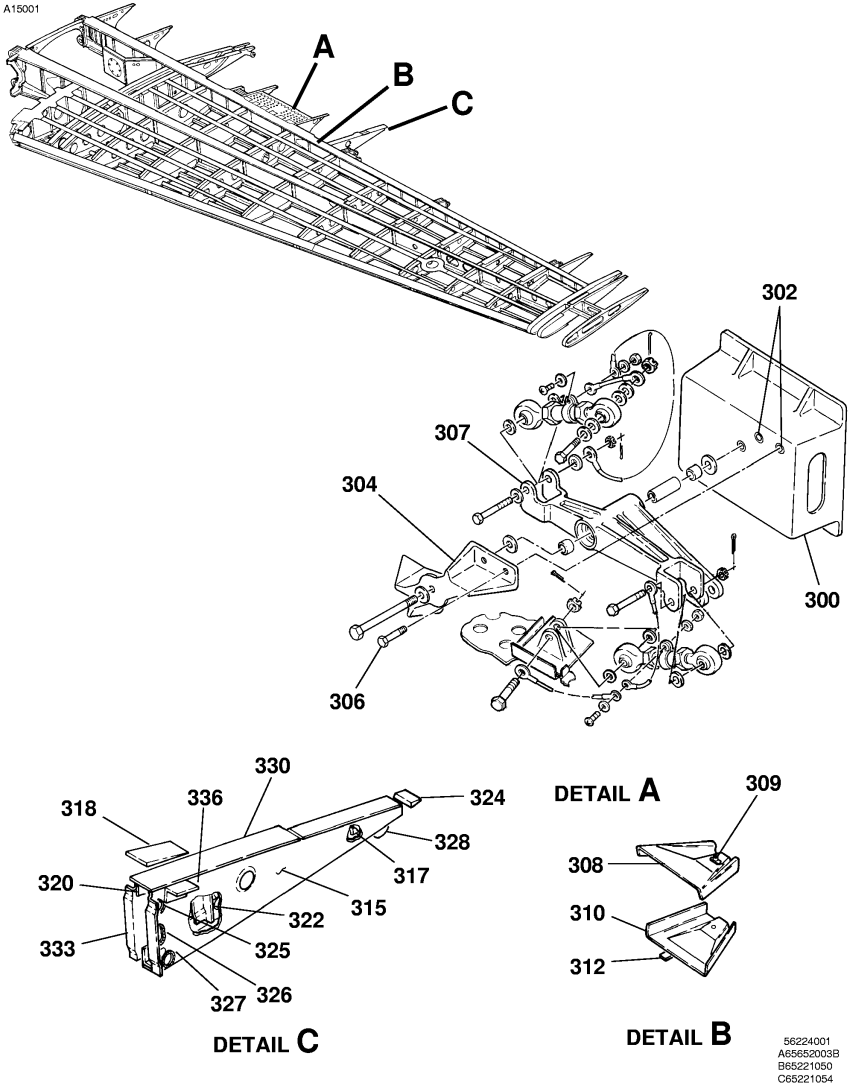

WING TRAILING EDGE
FIGURE 01 (SHEET 5)

FIG ITEM	PART NUMBER	NOMENCLATURE 1 2 3 4 5 6 7			UNITS PER ASSY
01					
300	5525502-27	. SUPPORT ASSY-SPEED BRAKE TRUNNION LH			01
- 301	5525502-28	. SUPPORT ASSY-SPEED BRAKE TRUNNION RH			01
302	MS21209F4-15	. . INSERT T-THREAD			05
- 303	6522067-3	. SHIM-UPPER REAR SPAR LH AND RH			02
304	5525502-5	. BRIDGE-BELLCRANK SUPPORT LH			01
- 305	5525502-6	. BRIDGE-BELLCRANK SUPPORT RH			01
		ATTACHING PARTS			
306	NAS144-9	. BOLT			04
		—*—			
307		. BELLCRANK-SPEED BRAKE DOORS-REFER TO 27-60-00 FIGURE 01			RF
308	6565046-5	. SUPPORT UPPER-LH AND RH BELLCRANK MOUNT			02
309	NAS1773-4	. NUTPLATE-LH AND RH			02
310	6565046-3	. SUPPORT LOWER LH-BELLCRANK MOUNT WS160.95			01
- 311	6565046-4	. SUPPORT LOWER RH-BELLCRANK MOUNT WS160.95			01
312	6565046-6	. SHIM-LH AND RH			02
- 313	6522037-51	. RIB ASSY LH-FLAP ISLAND OUTBOARD WS173.79	0001	0493	01
- 313A	6522037-65	. RIB ASSY LH-FLAP ISLAND OUTBOARD WS173.79	0494	0538	01
- 314	6522037-52	. RIB ASSY RH-FLAP ISLAND OUTBOARD WS173.79	0001	0493	01
- 314A	6522037-66	. RIB ASSY RH-FLAP ISLAND OUTBOARD WS173.79	0494	0538	01
315	6522037-57	. . WEB OUTBD LH			01
- 316	6522037-8	. . WEB OUTBD RH			01
317	6522037-16	. . RADIUS FILLER			01
318	6522037-17	. . SHIM LH			01
- 319	6522037-18	. . SHIM RH			01
320	6522037-19	. . DOUBLER LH			01
- 321	6522037-20	. . DOUBLER RH			01
322	6522037-45	. . STIFFENER LH			01
- 323	6522037-46	. . STIFFENER RH			01
324	6522037-49	. . FILLER			01
325	S1050-3-2.36	. . GROMMET			03
326	S1050-1-3.06	. . GROMMET			02
327	S1050-1-2.36	. . GROMMET			01
328	6522061-2	. . TRACK OUTBOARD	0001	0493	01
- 328A	6522061-4	. . TRACK OUTBOARD	0494	0538	01
- 329	6525124-5	. . BUSHING-FLAP BEARING			01
330	6522037-9	. . CAP LH			01
- 331	6522037-10	. . CAP RH			01
- 332		. . SKIN-UPPER AND LOWER-REFER TO 57-20-01 FIGURE 01			RF
333	6522037-53	. . WEB ASSY LH-NBOARD			01
- 334	6522037-42	. . WEB ASSY RH-INBOARD			01
- 335	MS21047L3	. . . NUTPLATE			02
336	6522037-15	. SKIN SUPPORT-LH AND RH OUTBOARD BRACKET			02

- ITEM NOT ILLUSTRATED

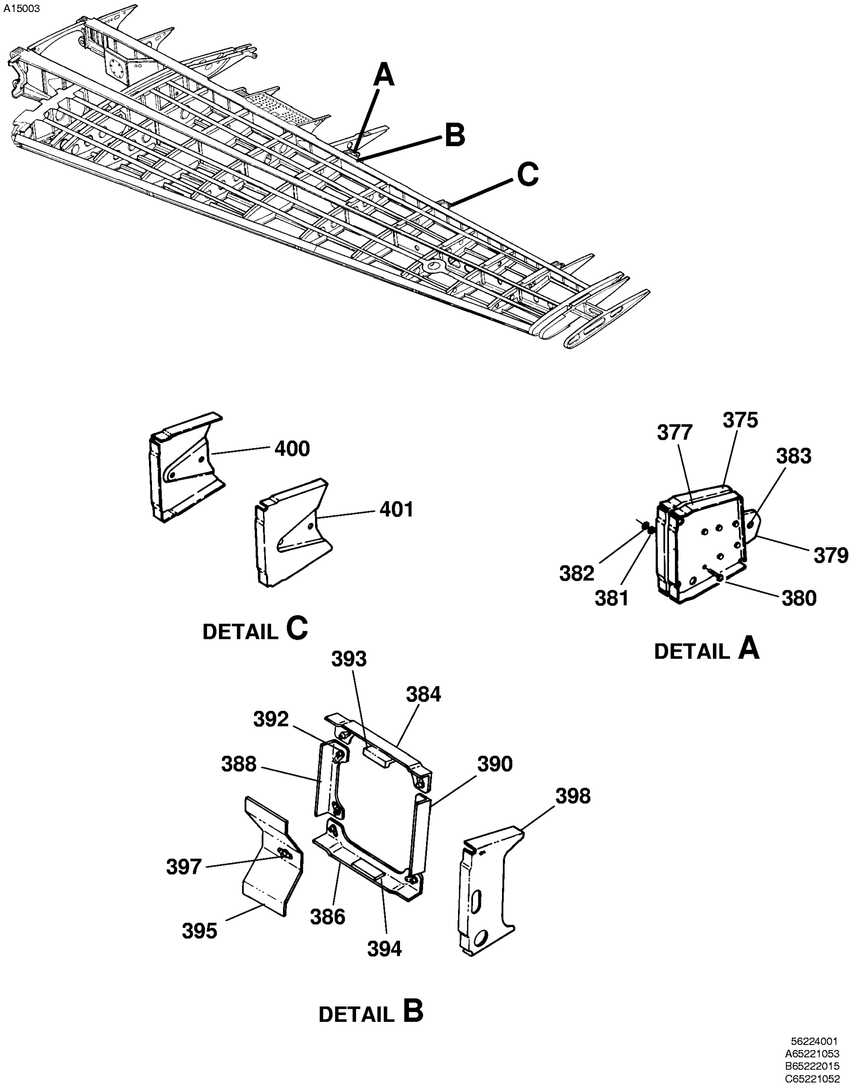

WING TRAILING EDGE
FIGURE 01 (SHEET 6)

FIG ITEM	PART NUMBER	NOMENCLATURE 1 2 3 4 5 6 7			UNITS PER ASSY
01					
375	6522035-4	. BRACKET-AILERON HINGE LH INBOARD WS179.57 FSO 6522035-6	0001	0111	NP
- 375A	6522035-6	. BRACKET-AILERON HINGE LH INBOARD WS179.57	0112	0538	01
- 376	6522035-4	. BRACKET-AILERON HINGE RH OUTBOARD WS179.57 FSO 6522035-6	0001	0111	NP
- 376A	6522035-6	. BRACKET-AILERON HINGE RH OUTBOARD WS179.57	0112	0538	01
377	6522035-3	. BRACKET-AILERON HINGE LH OUTBOARD WS179.57 FSO 6522035-7	0001	0111	NP
- 377A	6522035-7	. BRACKET-AILERON HINGE LH OUTBOARD WS179.57	0112	0538	01
- 378	6522035-3	. BRACKET-AILERON HINGE RH INBOARD WS179.57 FSO 6522035-7	0001	0111	NP
- 378A	6522035-7	. BRACKET-AILERON HINGE RH INBOARD WS179.57	0112	0538	01
379	5522865-1	. PLATE ASSY-BEARING LH AND RH			02
		ATTACHING PARTS			
380	AN3-7A	. BOLT			06
381	NAS1149D0363K	. WASHER			06
382	MS21042L3	. NUT			06
		—*—			
383	MS20201KP4A	. . BEARING FSO MS27641-4			NP
- 383A	MS27641-4	. . BEARING			01
384	6522043-25	. SUPPORT UPPER LH			01
- 385	6522043-26	. SUPPORT UPPER RH			01
386	6522043-29	. SUPPORT LOWER LH			01
- 387	6522043-30	. SUPPORT LOWER RH			01
388	6522043-33	. SUPPORT INBD LH	0002	0386	01
- 388A	6522043-43	. SUPPORT INBD LH	0387	0538	01
- 389	6522043-34	. SUPPORT INBD RH	0001	0538	01
390	6522043-37	. SUPPORT OUTBD LH	0001	0538	01
- 391	6522043-38	. SUPPORT OUTBD RH	0001	0538	01
392	NAS696A3	. NUT-PLATE			08
393	6522043-21	. GUARD UPPER			02
394	6522043-39	. GUARD LOWER	0001	0538	02
395	6522043-13	. BRACKET ASSY LH	0001	0538	01
- 396	6522043-14	. BRACKET ASSY RH			01
397	MS21059L4	. . NUTPLATE			01
398	6522043-17	. END RIB LH WS 186.07	0001	0538	01
- 398A	6522043-49	. END RIB LH WS 186.07	0538	0538	01
- 399	6522043-18	. END RIB RH WS 186.07	0001	0538	01
- 399A	6522043-48	. END RIB RH WS 186.07	0538	0538	01
400	6565031-6	. SUPPORT RIB INBD-AILERON TRIM TAB ACTUATOR SUPPORT LH WS193.07 FSO 6565031-8			NP
- 400A	6565031-8	. SUPPORT RIB INBD-AILERON TRIM TAB ACTUATOR SUPPORT LH WS193.07			01
401	6565031-5	. SUPPORT RIB OUTBD-AILERON TRIM TAB ACTUATOR SUPPORT LH WS197.07			01

- ITEM NOT ILLUSTRATED

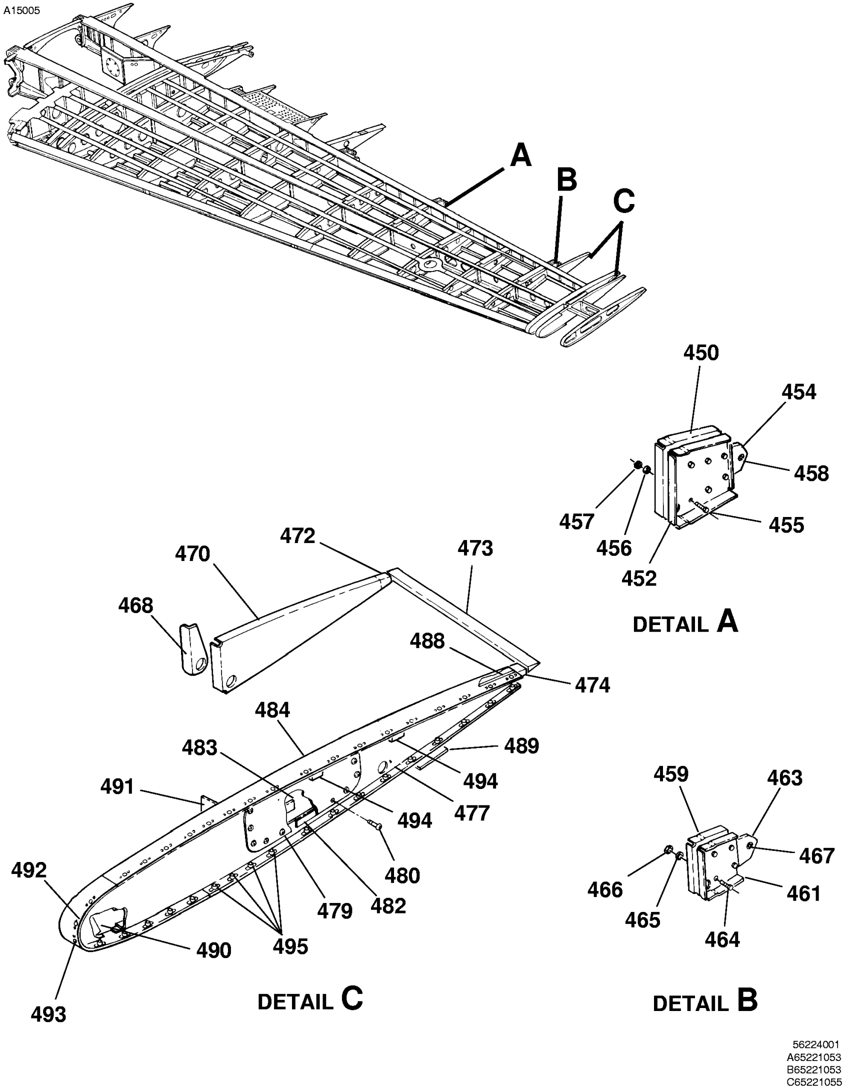

WING TRAILING EDGE
FIGURE 01 (SHEET 7)

FIG ITEM	PART NUMBER	NOMENCLATURE 1 2 3 4 5 6 7		UNITS PER ASSY
01				
450	6522041-6	. BRACKET-AILERON HINGE LH INBOARD WS222.07		01
- 451	6522041-6	. BRACKET-AILERON HINGE RH OUTBOARD WS222.07		01
452	6522041-5	. BRACKET-AILERON HINGE LH OUTBOARD WS222.07		01
- 453	6522041-5	. BRACKET-AILERON HINGE RH INBOARD WS222.07		01
454	5522865-1	. PLATE ASSY-BEARING LH AND RH		02
		ATTACHING PARTS		
455	AN3-7A	. BOLT		06
456	NAS1149D0363J	. WASHER		06
457	MS21042L3	. NUT		06
		—*—		
458	MS20201KP4A	. . BEARING		01
459	6522042-8	. BRACKET RH-AILERON HINGE INBOARD WS274.52		01
- 460	6522042-8	. BRACKET RH-AILERON HINGE OUTBOARD WS274.52		01
461	6522042-7	. BRACKET LH-AILERON HINGE OUTBOARD WS274.52		01
- 462	6522041-7	. BRACKET-AILERON HINGE RH INBOARD WS274.52		01
463	6522068-1	. BEARING PLATE ASSY LH AND RH		02
		ATTACHING PARTS		
464	AN3-7A	. BOLT		04
465	NAS1149D0363J	. WASHER		04
466	MS21042L3	. NUT		04
		—*—		
467	MS27641-4	. . BEARING		01
468	6522038-7	. BRACKET - LH WS278.77		01
- 469	6522038-8	. BRACKET - RH WS278.77		01
470	6522038-5	. RIB - WS278.77 - LH		01
- 471	6522038-6	. RIB - WS278.77 - RH		01
472	6522038-9	. BLOCK - INBOARD LH AND RH WS278.77		02
473	6522038-10	. TRAILING EDGE STRIP-LH AND RH		02
474	6522038-12	. BLOCK-OUTBOARD-LH AND RH WS293.02		02
- 475	6522017-21	. CLOSURE RIB ASSY LH WS293.02		01
- 476	6522017-22	. CLOSURE RIB ASSY RH WS293.02		01
477	6522017-29	. . CLOSURE RIB LH		01
- 478	6522017-30	. . CLOSURE RIB RH		01
479	6522017-17	. . ACCESS DOOR		01
		ATTACHING PARTS		
480	NAS623-3-3	. . SCREW		19
		—*—		
- 481	NAS1473A3	. . NUTPLATE		19
482	6522017-18	. . SEAL		01
483	6522017-20	. . BRACKET		01
484	6522017-25	. ATTACH STRAP LH		01
- 485	6522017-27	. FILLER LH-NOSE		01
- 486	6522017-26	. ATTACH STRAP RH		01
- 487	6522017-28	. FILLER RH-NOSE		01
488	6522017-31	. SHIM UPPER-LH AND RH		02
489	6522017-32	. SHIM LOWER-LH AND RH		02
490	6522017-11	. ANGLE-LH AND RH		02
491	5522120-37	. BRACKET-MAIN SPAR LH AND RH		02
492	F6010L10A	. NUTPLATE-LH AND RH	V08524	04
493	MS21075L3N	. NUTPLATE-LH AND RH		02
494	MS3341-2-9	. MOUNT-WIRE BUNDLE LH AND RH		04
495	MS21059L3	. NUTPLATE-LH AND RH		74

- ITEM NOT ILLUSTRATED

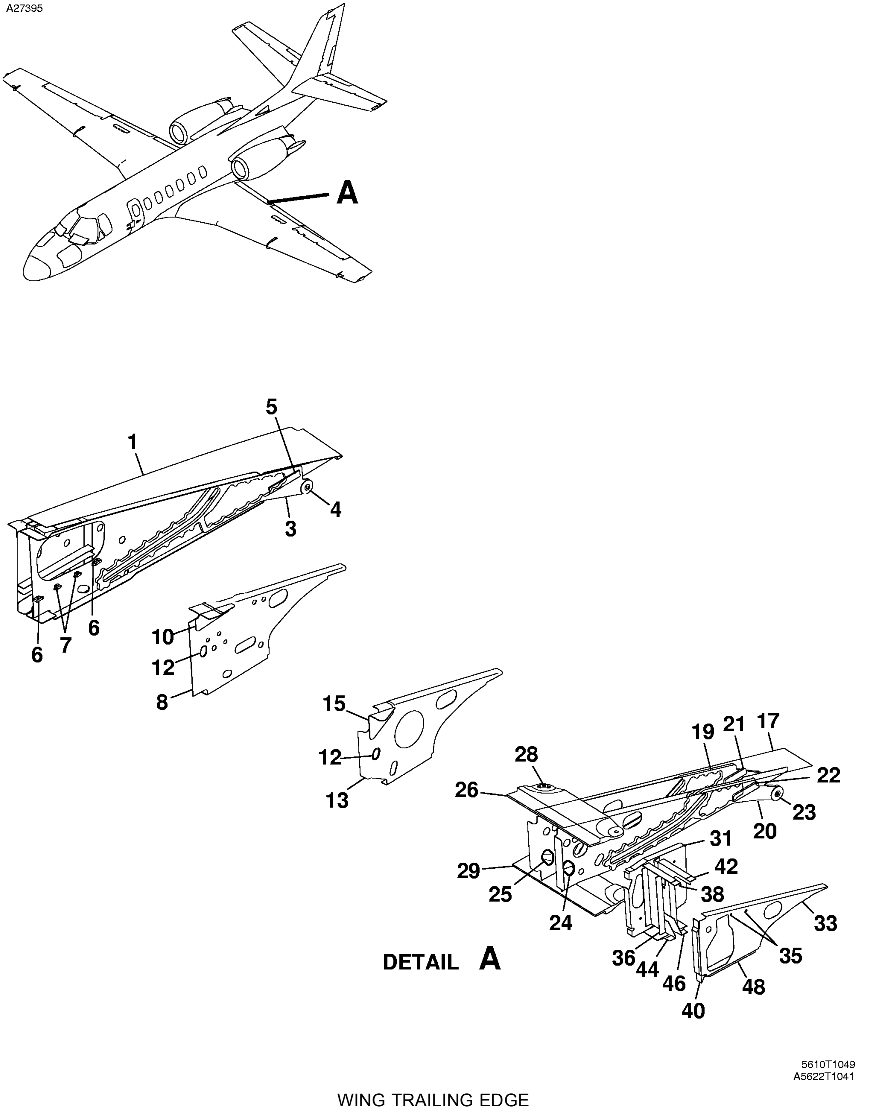

WING TRAILING EDGE
FIGURE 02 (SHEET 1)

FIG ITEM	PART NUMBER	NOMENCLATURE 1 2 3 4 5 6 7			UNITS PER ASSY
02					
-		WING TRAILING EDGE	0539	& ON	RF
1	6522708-3	. FLAP ISLAND ASSY-INBD LH FSO 6522708-7	0539	0645	NP
- 1A	6522708-7	. FLAP ISLAND ASSY-INBD LH FSO 6522708-9	0646	0647	NP
- 1B	6522708-9	. FLAP ISLAND ASSY-INBD LH	0688	& ON	01
- 2	6522708-4	. FLAP ISLAND ASSY-INBD RH FSO 6522708-6	0539	0645	NP
- 2A	6522708-6	. FLAP ISLAND ASSY-INBD RH FSO 6522708-10	0646	0647	NP
- 2B	6522708-10	. FLAP ISLAND ASSY-INBD RH	0688	& ON	01
3	6522060-3	. . TRACK INBOARD-FLAP FSO 6522060-201 AND 6522060-202			NP R
- 3A	6522060-201	. . TRACK INBOARD-FLAP LH FOR SPARES ONLY			01 R
- 3B	6522060-202	. . TRACK INBOARD-FLAP RH FOR SPARES ONLY			01 R
4	6525124-5	. . BUSHING-FLAP TRACK			01
5	6522058-25	. . RADIUS BLOCK-FLAP TRACK BUSHING			01
6	MS21061L08	. . NUTPLATE	0539	0647	02
- 6A	MS21061L3	. . NUTPLATE	0648	& ON	02
7	MS21059L08	. . NUTPLATE	0539	0647	02
- 7A	MS21059L3	. . NUTPLATE	0648	& ON	02
8	6522704-1	. RIB-LH WING TRAILING EDGE FSO 6522704-5	0539	0661	NP
- 8A	6522704-5	. RIB-LH WING TRAILING EDGE	0662	& ON	01
- 9	6522704-2	. RIB-RH WING TRAILING EDGE FSO 6522704-6	0539	0661	NP
- 9A	6522704-6	. RIB-RH WING TRAILING EDGE	0662	& ON	01
10	6522704-3	. CLIP- LH			01
- 11	6522704-4	. CLIP- RH			01
12	S1050-2	. GROMMET			02
13	6522706-1	. RIB-LH WING TRAILING EDGE FSO 6522706-5	0539	0661	NP
- 13A	6522706-5	. RIB-LH WING TRAILING EDGE	0662	& ON	01
- 14	6522706-2	. RIB-RH WING TRAILING EDGE FSO 6522706-6	0539	0661	NP
- 14A	6522706-6	. RIB-RH WING TRAILING EDGE	0662	& ON	01
15	6522706-3	. CAP CLIP- LH			01
- 16	6522706-4	. CAP CLIP- RH			01
17	6522036-75	. FLAP ISLAND ASSY-LH CENTER	0539	0542	01
- 17A	6522036-87	. FLAP ISLAND ASSY-LH CENTER FSO 6522036-103	0543	0644	NP
- 17B	6522036-93	. FLAP ISLAND ASSY-LH CENTER FSO 6522036-103	0645	0658	NP
- 17C	6522036-103	. FLAP ISLAND ASSY-LH CENTER	0659	& ON	01
- 18	6522036-76	. FLAP ISLAND ASSY-RH CENTER	0539	0542	01
- 18A	6522036-88	. FLAP ISLAND ASSY-RH CENTER FSO 6522036-104	0543	0644	NP
- 18B	6522036-94	. FLAP ISLAND ASSY-RH CENTER FSO 6522036-104	0645	0658	NP
- 18C	6522036-104	. FLAP ISLAND ASSY-RH CENTER	0659	& ON	01
19	6522060-4	. TRACK OUTBOARD-CENTER FLAP			02
20	6522061-3	. TRACK INBOARD-CENTER FLAP			02
21	6522037-16	. RADIUS FILLER-BLOCK CENTER OUTBOARD			02
22	6522037-40	. RADIUS FILLER-BUSHING CENTER INBOARD			02
23	6525124-5	. BUSHING-FLAP TRACK			04
24	S1050-1	. GROMMET-CENTER OUTBOARD 4.75 IN LG BKI			02
25	S1050-1	. GROMMET-CENTER INBOARD 4.60 IN LG BKI			02
26	6565047-11	. BRACKET-LH UPPER MOUNTING			01
- 27	6565047-12	. BRACKET-RH UPPER MOUNTING			01
28	NAS1773-4	. NUTPLATE			01
29	6565047-3	. BRACKET-LH LOWER MOUNTING			01
- 30	6565047-4	. BRACKET-RH LOWER MOUNTING			01
31	6565042-45	. RIB-LH SUPPORT			01
- 32	6565042-46	. RIB-RH SUPPORT			01
33	6565042-31	. RIB ASSY LH			01
- 34	6565042-32	. RIB ASSY RH			01
35	MS21047L08	. . NUTPLATE			02
36	6565042-3	. ATTACH ASSY FWD LH			01
- 37	6565042-4	. ATTACH ASSY FWD RH			01
38	6565042-7	. UPPER ANGLE FWD LH			01
- 39	6565042-8	. UPPER ANGLE FWD RH			01
40	6565042-37	. ANGLE-LH RIB			01
- 41	6565042-38	. ANGLE-RH RIB			01
42	6565042-11	. UPPER ANGLE AFT LH			01
- 43	6565042-12	. UPPER ANGLE AFT RH			01
44	6565042-9	. LOWER ANGLE FWD LH			01
- 45	6565042-10	. LOWER ANGLE FWD RH			01
46	6565042-13	. LOWER ANGLE AFT LH			01
- 47	6565042-14	. LOWER ANGLE AFT RH			01
48	6565042-21	. RIB BRACKET LH			01
- 49	6565042-22	. RIB BRACKET RH			01

- ITEM NOT ILLUSTRATED

A27396

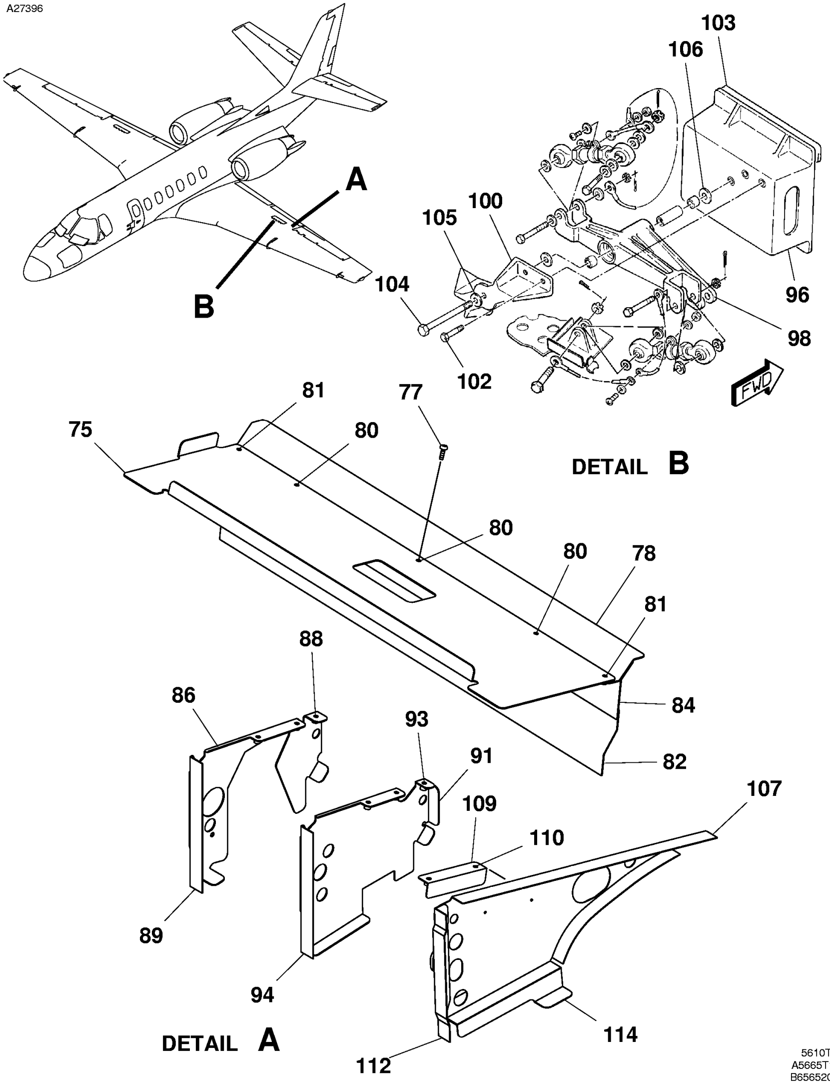

5610T1049
A5665T1005
B65652003B

WING TRAILING EDGE
FIGURE 02 (SHEET 2)

FIG ITEM	PART NUMBER	NOMENCLATURE 1 2 3 4 5 6 7			UNITS PER ASSY
02					
75	6522066-19	. SEAL PAN LH SPEED BRAKE FSO 6522066-21	0539	0777	NP
- 75A	6522066-21	. SEAL PAN LH SPEED BRAKE	0778	& ON	01
- 76	6522066-20	. SEAL PAN-RH SPEED BRAKE FSO 6522066-22	0539	0777	NP
- 76A	6522066-22	. SEAL PAN RH SPEED BRAKE	0778	& ON	01
		ATTACHING PARTS			
77	MS27039-0806	. SCREW			15
		—*—			
78	6522066-15	. Z-PAN ASSY LH UPPER			01
- 79	6522066-16	. Z-PAN ASSY RH UPPER			01
80	MS21070L08K	. . NUTPLATE			03
81	MS21086L08K	. . NUTPLATE			02
82	6522066-5	. Z-PAN LH LOWER			01
- 83	6522066-6	. Z-PAN RH LOWER			01
84	6522066-7	. CLOSURE PAN-LH			01
- 85	6522066-8	. CLOSURE PAN-RH			01
86	6522065-11	. RIB ASSY LH			01
- 87	6522065-12	. RIB ASSY RH			01
88	MS21086L08	. . NUTPLATE			03
89	6522065-15	. STIFFENER LH			01
- 90	6522065-16	. STIFFENER RH			01
91	6522065-39	. RIB ASSY LH			01
- 92	6522065-40	. RIB ASSY RH			01
93	MS21086L08	. . NUTPLATE			03
94	6522065-13	. STIFFENER LH			01
- 95	6522065-14	. STIFFENER RH			01
96	5525502-27	. SUPPORT ASSY-LH TRUNNION FSO 5525502-41	0539	0647	NP
- 96A	5525502-41	. SUPPORT ASSY-LH TRUNNION	0648	& ON	01
- 97	5525502-28	. SUPPORT ASSY-RH TRUNNION FSO 5525502-42	0539	0647	NP
- 97A	5525502-42	. SUPPORT ASSY-RH TRUNNION	0648	& ON	01
98	6565250-1	. BELLCRANK ASSY LH TRUNNION			01
- 99	6565250-2	. BELLCRANK ASSY RH TRUNNION			01
100	5525502-5	. TRUNNION BRIDGE-LH			01
- 101	5525502-6	. TRUNNION BRIDGE-RH			01
		ATTACHING PARTS			
102	NAS144-9	. BOLT			04
		—*—			
103	6522067-3	. SHIM			02
104	AN4-27A	. BOLT			02
105	NAS1149F0432P	. WASHER			02
106	NAS1149F0463P	. WASHER			02
107	6522065-49	. RIB LH			01
- 108	6522065-50	. RIB RH			01
109	6522065-25	. ANGLE ASSY			02
110	MS21086L08	. . NUTPLATE			02
- 111	S1050-1	. GROMMET-2.36 IN LG BKI			02
112	6522065-21	. CLIP LH RIB			01
- 113	6522065-22	. CLIP RH RIB			01
114	6522065-23	. ZEE LH RIB			01
- 115	6522065-24	. ZEE RH RIB			01

- ITEM NOT ILLUSTRATED

A27397

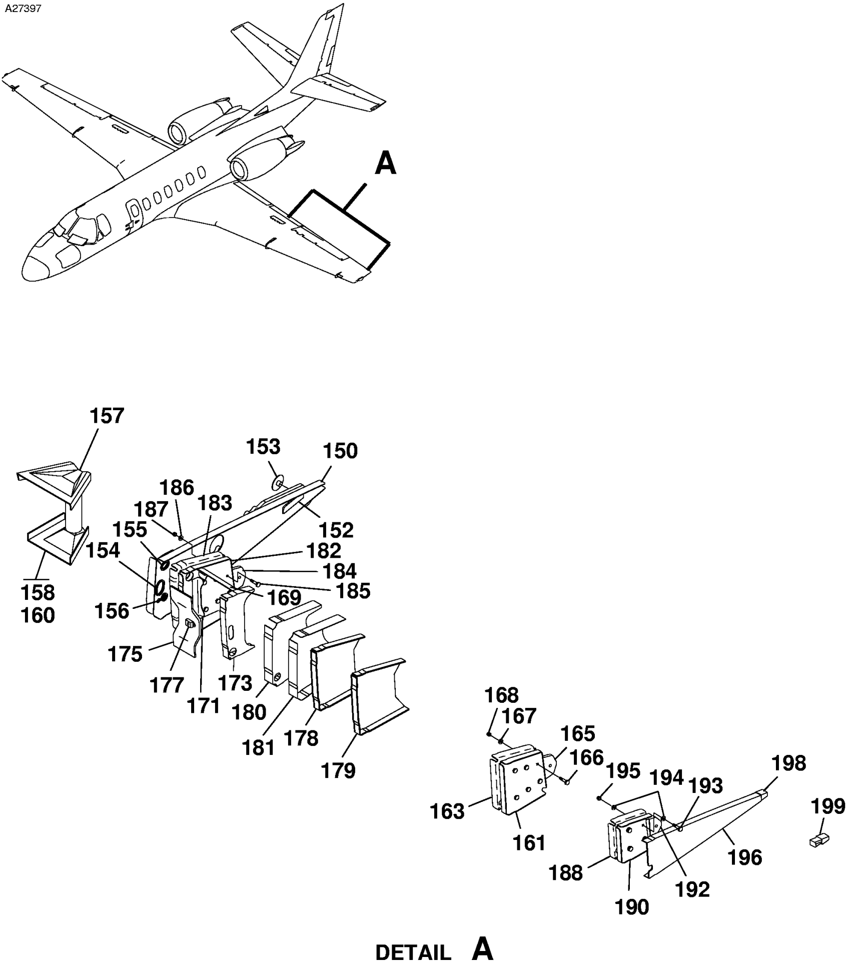

5610T1049
A5622T1042

WING TRAILING EDGE
FIGURE 02 (SHEET 3)

FIG ITEM	PART NUMBER	NOMENCLATURE 1 2 3 4 5 6 7			UNITS PER ASSY
02					
150	6522037-85	. RIB ASSY-LH OUTBOARD FLAP ISLAND	0539	0542	01
- 150A	6522037-91	. RIB ASSY-LH OUTBOARD FLAP ISLAND FSO 6522037-99	0543	0650	NP
- 150B	6522037-93	. RIB ASSY-LH OUTBOARD FLAP ISLAND FSO 6522037-99	0651	0658	NP
- 150C	6522037-99	. RIB ASSY-LH OUTBOARD FLAP ISLAND	0659	& ON	01
- 151	6522037-86	. RIB ASSY-RH OUTBOARD FLAP ISLAND	0539	0542	01
- 151A	6522037-92	. RIB ASSY-RH OUTBOARD FLAP ISLAND	0543	0650	01
- 151B	6522037-94	. RIB ASSY-RH OUTBOARD FLAP ISLAND FSO 6522037-100	0651	0658	NP
- 151C	6522037-100	. RIB ASSY-RH OUTBOARD FLAP ISLAND	0659	& ON	01
152	6522037-16	. RADIUS FILLER			02
153	6525124-5	. BUSHING-FLAP TRACK			02
154	S1050-1	. GROMMET-4.15 IN LG BKI			04
155	S1050-1	. GROMMET-2.90 IN LG BKI			04
156	S1050-1	. GROMMET-2.36 IN LG BKI			04
157	6565046-5	. SUPPORT UPPER			02
158	6565046-3	. SUPPORT LOWER LH			01
- 159	6565046-4	. SUPPORT LOWER RH			01
160	6565046-6	. SHIM			02
161	6622096-3	. BRACKET-LH OUTBD HINGE LH CENTER			01
- 162	6622096-4	. BRACKET-RH OUTBD HINGE RH CENTER			01
163	6622096-1	. BRACKET-LH INBD HINGE LH CENTER			01
- 164	6622096-2	. BRACKET-RH INBD HINGE RH CENTER			01
165	5522865-1	. BEARING PLATE ASSY-AILERON HINGE			02
		ATTACHING PARTS			
166	AN3-7A	. BOLT			06
167	NAS1149D0363K	. WASHER			06
168	MS21042L3	. NUT			06
		—*—			
169	6522043-25	. SUPPORT UPPER LH			01
- 170	6522043-26	. SUPPORT UPPER RH			01
171	6522043-37	. SUPPORT OUTBD LH			01
- 171A		. DELETED-NOT USED			
- 172		. DELETED-NOT USED			
- 172A	6522043-38	. SUPPORT OUTBD RH			01
173	6522043-17	. END RIB LH	0539	0639	01
- 173A	6522043-49	. END RIB LH WS 186.07	0640	& ON	01
- 174	6522043-18	. END RIB RH	0539	0639	01
- 174A	6522043-48	. END RIB RH WS 186.07	0640	& ON	01
175	6522043-13	. BRACKET ASSY LH			01
- 176	6522043-14	. BRACKET ASSY RH			01
177	MS21059L4	. . NUTPLATE			01
178	6565031-5	. SUPPORT RIB OUTBD TAB ACTUATOR			01
- 178A	6522043-42	. SUPPORT INBD RH			01
- 178B	6522043-43	. SUPPORT INBD LH			01
179	6565031-6	. SUPPORT RIB INBD TAB ACTUATOR FSO 6565031-8	0539	0761	NP
- 179A	6565031-8	. SUPPORT RIB INBD TAB ACTUATOR	0762	& ON	01
- 179B	6522043-47	. GUARD UPPER			01
- 179C	6660327-10	. GUARD-LWR			01
180	6565024-3	. RIB INBOARD-RH			01
181	6565024-4	. RIB OUTBOARD-RH			01
182	6622095-3	. BRACKET-LH OUTBD AILERON HINGE			NP
- 182A	6622095-4	. BRACKET-RH OUTBD AILERON HINGE			01
183	6622095-1	. BRACKET-LH INBD AILERON HINGE			01
- 183A	6622095-2	. BRACKET-RH INBD AILERON HINGE			01
184	5522865-1	. BEARING PLATE ASSY-AILERON HINGE			02
		ATTACHING PARTS			
185	AN3-7A	. BOLT			06
186	NAS1149D0363K	. WASHER			06
187	MS21042L3	. NUT			06
		—*—			
188	6622097-1	. BRACKET-LH INBD AILERON HINGE			01
- 189	6622097-2	. BRACKET-RH INBD AILERON HINGE			01
190	6622097-3	. BRACKET-LH OUTBD AILERON HINGE			01
- 191	6622097-4	. BRACKET-RH OUTBD AILERON HINGE			01
192	6522068-1	. BEARING PLATE ASSY-AILERON HINGE			02
		ATTACHING PARTS			
193	AN3-7A	. BOLT			06
194	NAS1149D0363K	. WASHER			06
195	MS21042L3	. NUT			06
		—*—			
196	6622151-7	. RIB ASSY - LH			01
- 197	6622151-8	. RIB ASSY - RH			01
198	6522038-10	. TRAILING EDGE STRIP			02
199	6622151-5	. BLOCK - OUTBD TRAILING EDGE			02

- ITEM NOT ILLUSTRATED

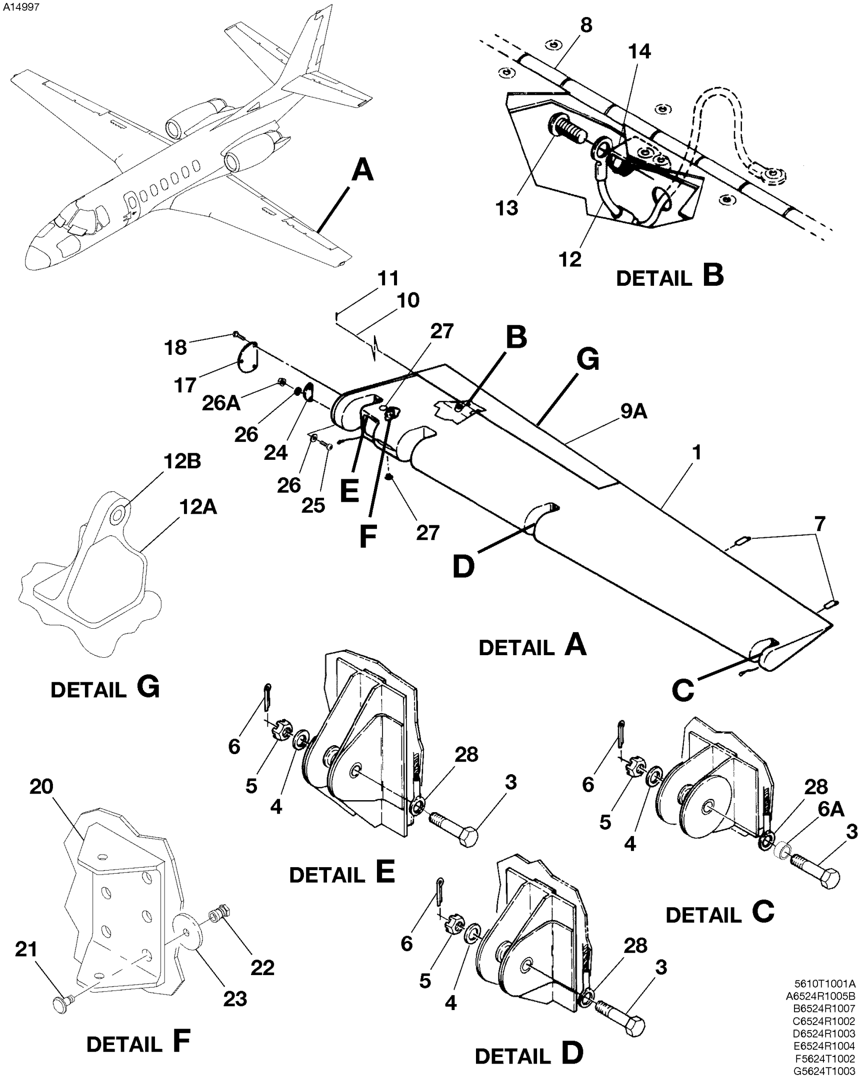

AILERON AND TRIM TAB INSTALLATION
FIGURE 01 (SHEET 1)

FIG ITEM	PART NUMBER	NOMENCLATURE 1 2 3 4 5 6 7				UNITS PER ASSY
01						
-		AILERON AND TRIM TAB INSTALLATION				RF
1	6524113-5	. AILERON ASSY-LH FSO 6524113-209		0001	0196	NP
- 1A	6524113-9	. AILERON ASSY-LH FSO 6524113-209		0197	0802	NP
- 1B	6524113-13	. AILERON ASSY-LH FSO 6524113-209		0803	& ON	NP
- 1C	6524113-201	. AILERON ASSY-LH FSO 6524113-209		0001	0802	NP R
- 1D	6524113-205	. AILERON ASSY-LH FSO 6524113-209		0001	0802	NP R
- 1E	6524113-209	. AILERON ASSY-LH-FOR SPARES ONLY		0803	& ON	01 R
- 2	6524010-10	. AILERON ASSY-RH FSO 6524010-204				NP
- 2A	6524010-204	. AILERON ASSY-RH				01
		ATTACHING PARTS				
3	NAS6204-16D	. BOLT				03
- 3A	NAS6204-18D	. BOLT SPARES ONLY				01 R
4	NAS1149F0463P	. WASHER				03
5	MS17825-4	. NUT				03
6	MS24665-134	. COTTER PIN				03
		—*—				
6A	NAS43HT4-10	. SPACER SPARES ONLY				03 R
7		. . BASE-STATIC WICK REFER TO 23-60-00 FIGURE 01				RF
8	6524122-3	. . HINGE-TRIM TAB LH				01
- 9	6524116-5	. . TRIM TAB ASSY LH FSO 6524116-7		0002	0196	NP
9A	6524116-7	. . TRIM TAB ASSY-AILERON LH		0197	& ON	01
		ATTACHING PARTS				
10	MS20253P2-4075	. . HINGE PIN				01
11	MS24665-132	. . COTTER PIN				02
		—*—				
12	MS25083-2AB3	. . . JUMPER ASSY-TRIM TAB ELECTRICAL GROUND				01
12A	6524122-1	. . . ACTUATOR LUG ASSY				02
12B	S1997-3G4	. . . . BEARING				01
13	MS27039-1-08	. . SCREW				01
14	AN256-10	. . NUTPLATE-LH ELECTRICAL GROUND				01
- 15	6524120-1	. . CAP ASSY-INBD LH				01
- 16	6524003-16	. . CAP ASSY RH-INBD				01
17	6524120-5	. . . COVER-ACCESS				01
		ATTACHING PARTS				
18	AN525-832R6	. . . SCREW				03
		—*—				
- 19	MS21075-08N	. . . NUTPLATE				01
20	6524004-10	. . DRIVE BRACKET-AILERON				01
		ATTACHING PARTS				
21	HL48-6-7	. . HI-LOK PIN PIN	V73197			06
22	HL78-6	. . COLLAR-HI-LOK	V73197			06
23	6524113-3	. . WASHER				06
		—*—				
24	6524004-12	. TUNING WEIGHT-INBOARD END LEADING EDGE				AR
		ATTACHING PARTS				
25	MS27039-1-XX	. SCREW REFER TO NOTE 1				02
26	NAS1149C0332R	. WASHER				04
26A	MS21042L3	. NUT				02
		—*—				
27	S1908W5	. BUTTON-PLUG				04
28	MS25083-2CB6	. JUMPER ASSY-ELECTRICAL GROUND LH AND RH FSO MS25083-2BC6				NP
- 28A	MS25083-2BC6	. JUMPER ASSY-ELECTRICAL GROUND LH AND RH FOR SPARES ONLY				06
		ATTACHING PARTS				
- 29	AN525-832R8	. SCREW ATTACH TO WING		0001	0751	01
- 29A	AN525-832R6	. SCREW		0752	& ON	01
- 30	MS21042-08	. NUT ATTACH TO WING				01
		—*—				

NOTE 1—LENGTH OF SCREW TO BE DETERMINED BY NUMBER OF TUNING WEIGHTS INSTALLED.

- ITEM NOT ILLUSTRATED

A15002

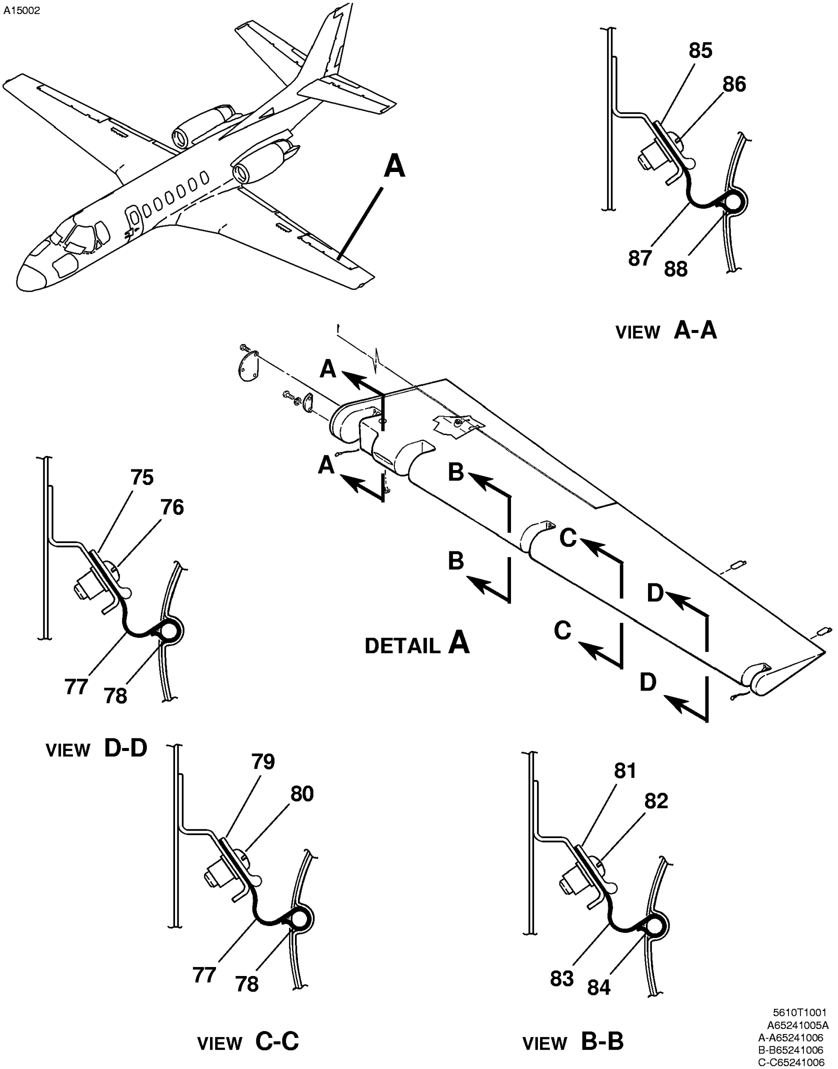

5610T1001
A65241005A
A-A65241006
B-B65241006
C-C65241006
D-D65241006

AILERON AND TRIM TAB INSTALLATION
FIGURE 01 (SHEET 2)

FIG ITEM	PART NUMBER	NOMENCLATURE 1 2 3 4 5 6 7	UNITS PER ASSY
01			
75	6565038-10	. STRAP-OUTBOARD OUTER	01
		ATTACHING PARTS	
76	MS27039-0807	. SCREW	10
		—*—	
77	6565038-3	. AILERON SEAL-OUTBOARD	01
78	6565038-6	. ROD-OUTBOARD	01
79	6565038-9	. STRAP-OUTBOARD INNER	01
		ATTACHING PARTS	
80	MS27039-0807	. SCREW	11
		—*—	
81	6565038-8	. STRAP-MIDDLE	01
		ATTACHING PARTS	
82	MS27039-0807	. SCREW	09
		—*—	
83	6565038-2	. AILERON SEAL-MIDDLE	01
84	6565038-5	. ROD-MIDDLE	01
85	6565038-7	. STRAP-INBOARD	01
		ATTACHING PARTS	
86	MS27039-0807	. SCREW	03
		—*—	
87	6565038-1	. AILERON SEAL-INBOARD	01
88	6565038-4	. ROD-INBOARD	01

- ITEM NOT ILLUSTRATED

CHAPTER SECTION SUBJECT		NUMBER OF PAGES	DATE
71 - TITLE			
71 - LIST OF EFFECTIVE PAGES			
71 - RECORD OF TEMPORARY REVISIONS			
71 - TABLE OF CONTENTS			
71-00-00	Figure 01	2	Aug 1/2007
71-00-00	Figure 02	2	Feb 1/2008
71-10-00	Figure 01	6	Aug 1/2015
71-10-00	Figure 02	2	Mar 1/2011
71-20-00	Figure 01	2	Mar 1/2011
71-20-00	Figure 02	2	Aug 1/2006
71-20-00	Figure 03	2	Aug 1/2006
71-30-00	Figure 01	2	May 1/2002
71-40-00	Figure 01	2	Aug 1/2007
71-50-00	Figure 01	4	Feb 1/2012
71-50-00	Figure 02	4	Aug 1/2007
71-50-00	Figure 03	4	Aug 1/2007
71-70-00	Figure 01	2	Aug 1/2013
71-70-00	Figure 02	2	Aug 1/2013

© Cessna Aircraft Company

SUBJECT	CHAPTER SECTION SUBJECT	FIGURE	EFFECTIVITY START	EFFECTIVITY END
POWERPLANT	71-00-00	01	0001	0538
POWERPLANT	71-00-00	02	0539	& ON
POWERPLANT COWLING	71-10-00	01	0001	0538
POWERPLANT COWLING	71-10-00	02	0539	& ON
POWERPLANT MOUNTING	71-20-00	01	0001	0538
POWERPLANT MOUNTING	71-20-00	02	0539	0750
POWERPLANT MOUNTING	71-20-00	03	0752	& ON
CHIP DETECTION SYSTEM	71-30-00	01	0539	& ON
POWERPLANT COWLING SUPPORTS	71-40-00	01	0001	0538
POWERPLANT WIRE HARNESS	71-50-00	01	0001	0259
POWERPLANT WIRE HARNESS	71-50-00	02	0260	0538
POWERPLANT WIRE HARNESS	71-50-00	03		
POWERPLANT DRAIN LINES	71-70-00	01	0001	0538
POWERPLANT DRAIN LINES - LH AND RH	71-70-00	02	0539	& ON

© Cessna Aircraft Company

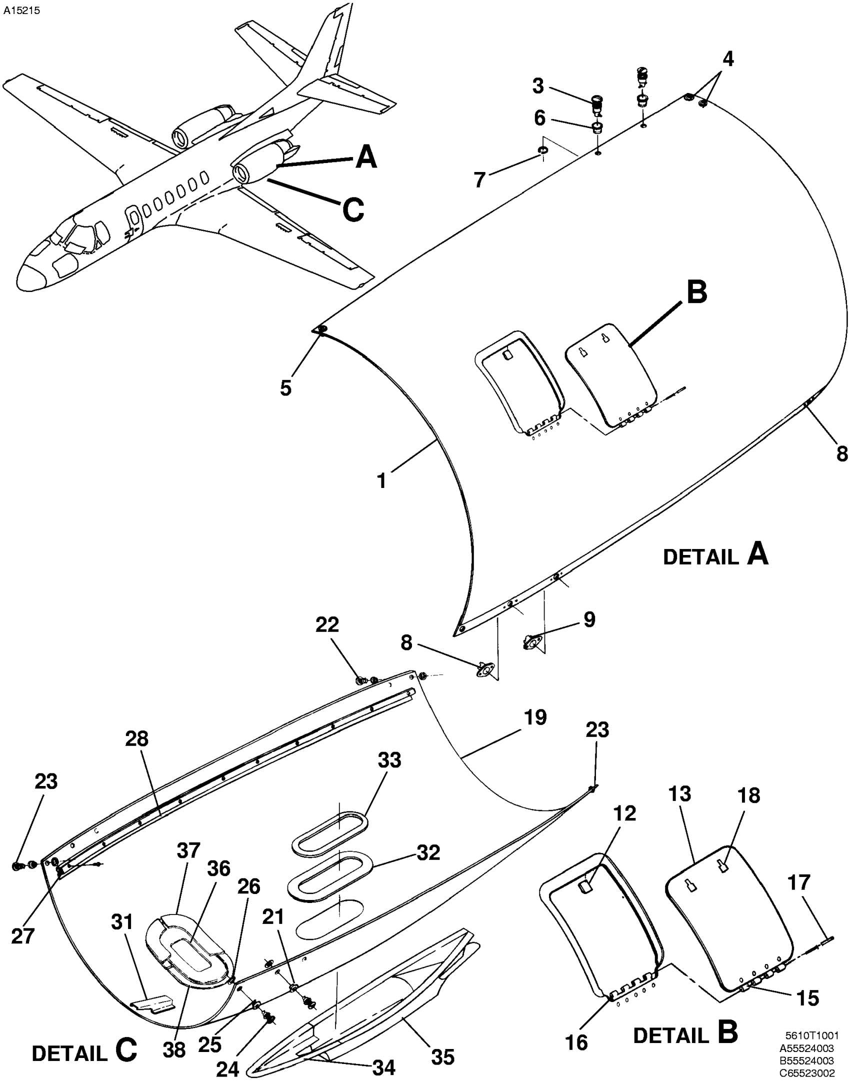

POWERPLANT COWLING
FIGURE 01 (SHEET 1)

FIG ITEM	PART NUMBER	NOMENCLATURE 1 2 3 4 5 6 7				UNITS PER ASSY
01						
-		POWERPLANT COWLING		0001	0538	RF
1	5552150-35	. COWL DOOR ASSY-LH UPPER		0001	0201	01
- 1A	5552150-49	. COWL DOOR ASSY-LH UPPER		0202	0538	01
- 2	5552150-34	. COWL DOOR ASSY-RH UPPER		0001	0201	01
- 2A	5552150-50	. COWL DOOR ASSY-RH UPPER		0202	0538	01
3	S3412-103	. . STUD				20
4	S3412-104	. . STUD				02
5	S3412-105	. . STUD				01
6	S2319-63	. . GROMMET				23
7	R4G	. . RING	V29372			23
8	214-16	. . RECEPTACLE	V29372			02
9	244-16	. . RECEPTACLE	V29372			05
- 10	5552150-33	. . SHIM-HINGE LH				01
- 11	5552150-32	. . SHIM-HINGE RH				01
12	5552150-31	. . BLOCK				02
13	5552150-37	. . DOOR ASSY-LH				01
- 14	5552150-38	. . DOOR ASSY-RH				01
15	5552155-5	. . . HINGE HALF-UPPER				01
16	5552155-6	. . . HINGE HALF-LOWER				01
17	MS20253P2-355	. . . PIN-HINGE				01
18	H5000-2-064-268	. . . LATCH	V83014			02
19	5552110-59	. COWL DOOR ASSY-LH LOWER		0001	0095	01
- 19A	5552110-69	. COWL DOOR ASSY-LH LOWER		0096	0201	01
- 19B	5552110-77	. COWL DOOR ASSY-LH LOWER FSO 5552110-85		0202	0202	NP
- 19C	5552110-85	. COWL DOOR ASSY-LH LOWER		0203	0259	01
- 19D	5552110-93	. COWL DOOR ASSY-LH LOWER		0260	0368	01
- 19E	5552110-99	. COWL DOOR ASSY-LH LOWER FSO 5552110-107		0369	0537	NP
- 19F	5552110-107	. COWL DOOR ASSY-LH LOWER		0538	0538	01
- 20	5552110-46	. COWL DOOR ASSY-RH LOWER FSO 5552110-60		0001	0002	NP
- 20A	5552110-60	. COWL DOOR ASSY-RH LOWER		0003	0201	01
- 20B	5552110-72	. COWL DOOR ASSY-RH LOWER FSO 5552110-86		0202	0202	NP
- 20C	5552110-86	. COWL DOOR ASSY-RH LOWER		0203	0259	01
- 20D	5552110-94	. COWL DOOR ASSY-RH LOWER		0260	0368	01
- 20E	5552110-100	. COWL DOOR ASSY-RH LOWER FSO 5552110-108		0369	0537	NP
- 20F	5552110-108	. COWL DOOR ASSY-RH LOWER		0538	0538	01
21	S3412-103	. . STUD				29
22	S3412-104	. . STUD				01
23	S3412-105	. . STUD				02
24	S3412-107	. . STUD				01
25	S2319-63	. . GROMMET				33
26	R4G	. . RING	V29372	0203	0259	33
- 26A	CM2791-1	. . RING		0260	0538	33
27	5552110-6	. . SEAL-REFER TO NOTE 1 FSO 5552110-101		0203	0259	NP
- 27A	5552110-95	. . SEAL-REFER TO NOTE 2 FSO 5552110-102		0260	0368	NP
- 27B	5552110-101	. . SEAL		0203	0259	01
- 27C	5552110-102	. . SEAL		0369	0538	01
28	5552110-7	. . RETAINER-LH		0203	0259	01
- 28A	5552110-97	. . RETAINER-LH		0260	0538	01
- 29	5552110-8	. . RETAINER-RH		0203	0259	01
- 29A	5552110-96	. . RETAINER-RH		0260	0538	01
		ATTACHING PARTS				
- 30	S1021A4-4	. . SCREW				16
		—*—				
31	5552110-21	. . SUPPORT		0203	0259	01
- 31A	5552110-92	. . SUPPORT		0260	0538	01
32	9597-103	. . SEAL	V11960			01
33	5552110-91	. . RETAINER-SEAL				01
34	5552116-7	. . FAIRING-DRAIN FORWARD				01
35	5552116-8	. . FAIRING ASSY-DRAIN AFT				01
36	6555059-32	. . SEAL				01
37	6555059-21	. . RETAINER				02
38	6555059-20	. . SPACER				02

NOTE 1—AIRPLANES -0203 THRU -0259 NOT INCORPORATING SB560-71-03.

NOTE 2—AIRPLANES -0203 THRU -0259 INCORPORATING SB560-71-03.

- ITEM NOT ILLUSTRATED

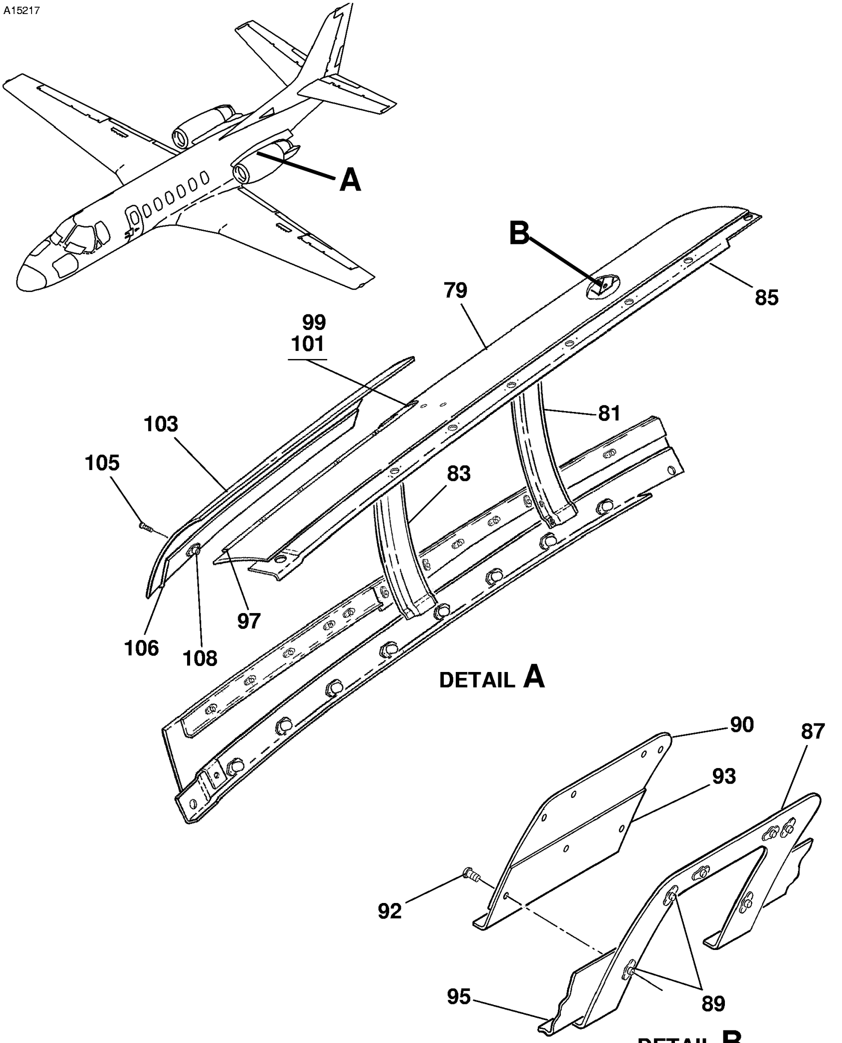

POWERPLANT COWLING
FIGURE 01 (SHEET 2)

FIG ITEM	PART NUMBER	NOMENCLATURE 1 2 3 4 5 6 7			UNITS PER ASSY
01					
- 75	6654100-49	. COWL ASSY-INBOARD UPPER LH	0002	0201	01
- 75A	6654100-91	. COWL ASSY-INBOARD UPPER LH	0202	0202	01
- 75B	6654100-103	. COWL ASSY-INBOARD UPPER LH	0203	0259	01
- 75C	6654100-105	. COWL ASSY-INBOARD UPPER LH	0260	0538	01
- 76	6654100-50	. COWL ASSY-INBOARD UPPER RH	0002	0201	01
- 76A	6654100-92	. COWL ASSY-INBOARD UPPER RH	0202	0202	01
- 76B	6654100-104	. COWL ASSY-INBOARD UPPER RH	0203	0259	01
- 76C	6654100-106	. COWL ASSY-INBOARD UPPER RH	0260	0538	01
- 77	6654100-5	. . SKIN ASSY-UPPER LH	0002	0201	01
- 77A	6654100-55	. . SKIN ASSY-UPPER LH	0202	0202	01
- 77B	6654100-101	. . SKIN ASSY-UPPER LH	0203	0259	01
- 77C	6654100-107	. . SKIN ASSY-UPPER LH	0260	0538	01
- 78	6654100-6	. . SKIN ASSY-UPPER RH	0002	0201	01
- 78A	6654100-56	. . SKIN ASSY-UPPER RH	0202	0202	01
- 78B	6654100-102	. . SKIN ASSY-UPPER RH	0203	0259	01
- 78C	6654100-108	. . SKIN ASSY-UPPER RH	0260	0538	01
79	6654100-13	. . . SKIN-LH	0002	0201	01
- 79A	6654100-63	. . . SKIN-LH	0202	0538	01
- 80	6654100-14	. . . SKIN-RH	0002	0201	01
- 80A	6654100-64	. . . SKIN-RH	0202	0538	01
81	5554100-55	. . . CHANNEL-AFT LH			01
- 82	5554100-56	. . . CHANNEL-AFT RH			01
83	5554100-53	. . . CHANNEL-FORWARD LH			01
- 84	5554100-54	. . . CHANNEL-FORWARD RH			01
85	5554100-51	. . . DOUBLER-UPPER LH	0001	0259	01
- 85A	5554100-57	. . . DOUBLER-UPPER LH	0260	0538	01
- 86	5554100-50	. . . DOUBLER-UPPER RH	0001	0259	01
- 86A	5554100-58	. . . DOUBLER-UPPER RH	0260	0538	01
87	6654100-21	. . . DOUBLER LH	0002	0201	01
- 87A	6654100-67	. . . DOUBLER LH	0202	0538	01
- 88	6654100-22	. . . DOUBLER RH	0002	0201	01
- 88A	6654100-68	. . . DOUBLER RH	0202	0538	01
89	MS21069L3	. . . NUTPLATE			06
90	6654100-9	. . . DOOR ASSY LH	0002	0201	01
- 90A	6654100-59	. . . DOOR ASSY LH	0202	0538	01
- 91	6654100-10	. . . DOOR ASSY RH	0002	0201	01
- 91A	6654100-60	. . . DOOR ASSY RH	0202	0538	01
		ATTACHING PARTS			
92	MS24694-S50	. . . SCREW			06
		—*—			
93	6654100-35	. . . . FIRESHIELD LH	0002	0201	01
- 93A	6654100-77	. . . . FIRESHIELD LH	0202	0538	01
- 94	6654100-36	. . . . FIRESHIELD RH	0002	0201	01
- 94A	6654100-78	. . . . FIRESHIELD RH	0202	0538	01
95	6654100-23	. . . FIRESHIELD LH	0002	0201	01
- 95A	6654100-85	. . . FIRESHIELD LH	0202	0538	01
- 96	6654100-24	. . . FIRESHIELD RH	0002	0201	01
- 96A	6654100-86	. . . FIRESHIELD RH	0202	0538	01
97	6554100-39	. . . DOUBLER LH			01
- 98	6554100-40	. . . DOUBLER RH			01
99	6654100-19	. . . SPACER LH			01
- 100	6654100-20	. . . SPACER RH			01
101	6654100-17	. . . DOUBLER LH			01
- 102	6654100-18	. . . DOUBLER RH			01
103	6654100-41	. . . DOOR ASSY-LH	0002	0201	01
- 103A	6654100-61	. . . DOOR ASSY-LH	0202	0202	01
- 103B	6654100-99	. . . DOOR ASSY-LH	0203	0538	01
- 104	6654100-42	. . . DOOR ASSY-RH	0002	0201	01
- 104A	6654100-62	. . . DOOR ASSY-RH	0202	0202	01
- 104B	6654100-100	. . . DOOR ASSY-RH	0203	0538	01
		ATTACHING PARTS			
105	MS24694-S50	. . . SCREW			07
		—*—			
106	6654100-39	. . . . FIRESHIELD LH	0002	0201	01
- 106A	6654100-80	. . . . FIRESHIELD LH	0202	0202	01
- 106B	6654100-97	. . . . FIRESHIELD LH	0203	0538	01
- 107	6654100-40	. . . . FIRESHIELD RH	0002	0201	01
- 107A	6654100-81	. . . . FIRESHIELD RH	0202	0202	01
- 107B	6654100-98	. . . . FIRESHIELD RH	0203	0538	01
108	MS21059L08	. . . . NUTPLATE			05

- ITEM NOT ILLUSTRATED

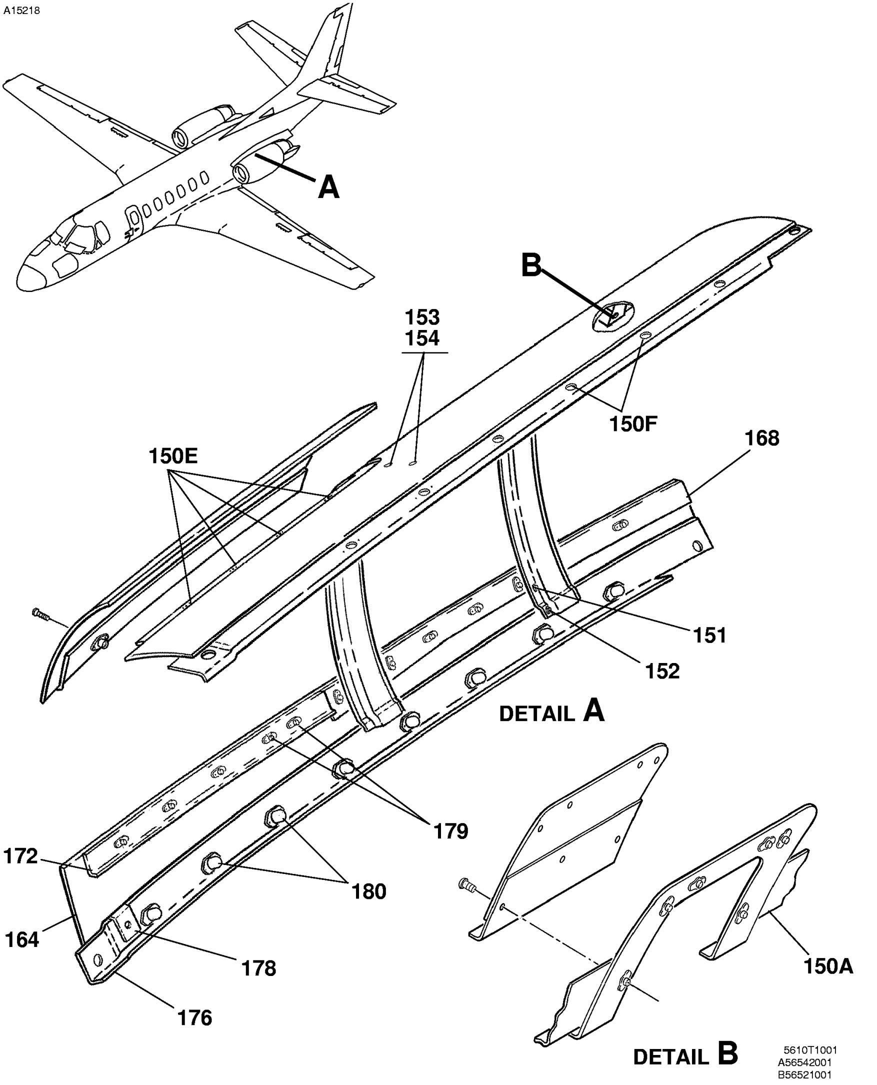

POWERPLANT COWLING
FIGURE 01 (SHEET 3)

FIG ITEM	PART NUMBER	NOMENCLATURE 1 2 3 4 5 6 7				UNITS PER ASSY
01						
150A	6654100-25	. . . FIRESHIELD-LH		0002	0201	01
- 150B	6654100-69	. . . FIRESHIELD-LH		0202	0538	01
- 150C	6654100-26	. . . FIRESHIELD-RH		0002	0201	01
- 150D	6654100-70	. . . FIRESHIELD-RH		0202	0538	01
150E	MS21049L3	. . . NUTPLATE				07
150F	244-16	. . RECEPTACLE UPPER COWL	V29372			07
151	MS21069L08	. . NUTPLATE				03
152	MS21049L08	. . NUTPLATE				03
153	S2319C75	. . STUD				02
154	4002HS	. . GROMMET	V71286			02
- 155	CM2791-1	. . SNAP RING				02
- 156	6654100-43	. COWL ASSY-INBOARD LOWER LH		0002	0201	01
- 157	6654100-83	. COWL ASSY-INBOARD LOWER LH		0202	0337	01
- 157A	6654100-109	. COWL ASSY-INBOARD LOWER LH FSO 6654100-113		0338	0386	NP
- 157B	6654100-113	. COWL ASSY-INBOARD LOWER LH		0387	0538	01
- 158	6654100-44	. COWL ASSY-INBOARD LOWER RH		0002	0201	01
- 159	6654100-84	. COWL ASSY-INBOARD LOWER RH		0202	0337	01
- 159A	6654100-110	. COWL ASSY-INBOARD LOWER RH FSO 6654100-114		0338	0386	NP
- 159B	6654100-114	. COWL ASSY-INBOARD LOWER RH		0387	0538	01
- 160	6654100-45	. . SKIN ASSY-LOWER LH		0002	0201	01
- 161	6654100-87	. . SKIN ASSY-LOWER LH		0202	0337	01
- 161A	6654100-111	. . SKIN ASSY-LOWER LH-FSO 6654100-115		0338	0386	NP
- 161B	6654100-115	. . SKIN ASSY-LOWER LH		0387	0538	01
		ATTACHING PARTS				
- 161C	MS21266-1N	. . GROMMET		0387	0538	01 R
		—*—				
- 162	6654100-46	. . SKIN ASSY-LOWER RH		0002	0201	01
- 163	6654100-88	. . SKIN ASSY-LOWER RH		0202	0337	01
- 163A	6654100-112	. . SKIN ASSY-LOWER RH-FSO 6654100-116		0338	0386	NP
- 163B	6654100-116	. . SKIN ASSY-LOWER RH		0387	0538	01
		ATTACHING PARTS				
- 163C	MS21266-1N	. . GROMMET		0387	0538	01 R
		—*—				
164	6654100-15	. . . SKIN-LH		0002	0201	01
- 165	6654100-65	. . . SKIN-LH		0202	0538	01
- 166	6654100-16	. . . SKIN-RH		0002	0201	01
- 167	6654100-66	. . . SKIN-RH		0202	0538	01
168	6654100-27	. . . FIRESHIELD LH		0002	0201	01
- 169	6654100-71	. . . FIRESHIELD LH		0202	0538	01
- 170	6654100-28	. . . FIRESHIELD RH		0002	0201	01
- 171	6654100-72	. . . FIRESHIELD RH		0202	0538	01
172	6654100-47	. . . FIRESHIELD LH		0002	0201	01
- 173	6654100-89	. . . FIRESHIELD LH		0202	0538	01
- 174	6654100-48	. . . FIRESHIELD RH		0002	0201	01
- 175	6654100-90	. . . FIRESHIELD RH		0202	0538	01
176	5554100-49	. . . DOUBLER-LOWER LH		0002	0337	01
- 176A	5554100-59	. . . DOUBLER-LOWER LH		0338	0538	01
- 177	5554100-44	. . . DOUBLER-LOWER RH		0002	0337	01
- 177A	5554100-60	. . . DOUBLER-LOWER RH		0338	0538	01
178	5554100-41	. . . DOUBLER				01
179	MS21059L08	. . . NUTPLATE				12
180	244-16SCD	. . RECEPTACLE LOWER COWL	V71286			08

- ITEM NOT ILLUSTRATED

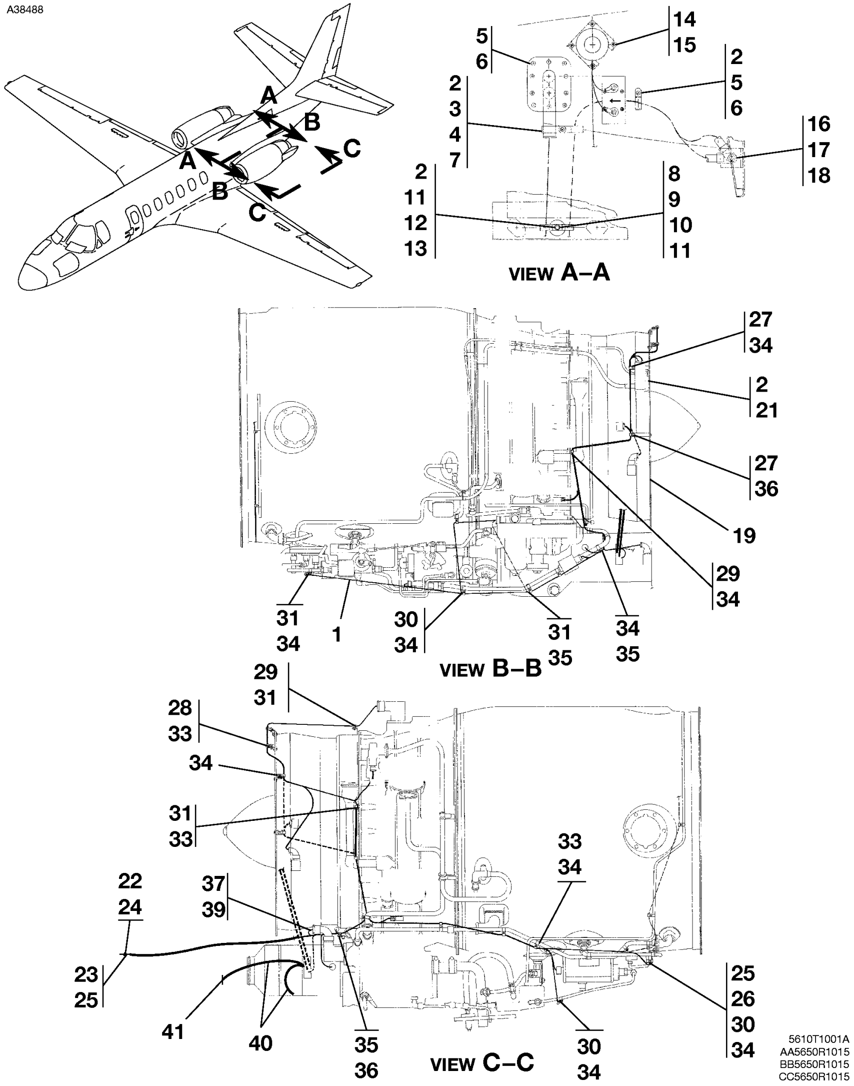

POWERPLANT WIRE HARNESS
FIGURE 01 (SHEET 1)

FIG ITEM	PART NUMBER	NOMENCLATURE 1 2 3 4 5 6 7				UNITS PER ASSY
01						
-		POWERPLANT WIRE HARNESS		0001	0259	RF
1	6578001-1-04	. WIRE BUNDLE ASSY-LH				01
2	TA713WS13TM	. CLAMP	V84971			04
3	TA713WS12TM	. CLAMP	V84971			01
4	NAS603-5	. SCREW				01
5	NAS602-6	. SCREW				11
6	NAS1149FN816P	. WASHER				11
7	MS21044N3	. NUT				01
8	J4624-53	. STANDOFF				01
9	6558005-11	. MODIFIED STANDOFF				01
10	MS9350-11	. CLAMP				02
		ATTACHING PARTS				
11	MS24693-S95	. SCREW				01
12	MS35338-44	. WASHER				01
13	MS35649-2254	. NUT				01
		—*—				
14	FSU28	. NUT RING	V04967			01
		ATTACHING PARTS				
15	NAS602-7	. SCREW				04
		—*—				
16	AN6-10	. BOLT				01
17	MS27183-13	. WASHER				02
18	MS21044N6	. NUT				01
19	TA713WS03T	. CLAMP	V84971			02
- 20	S2034-1	. MOUNT-FSO S4132-1				NP
- 20A	S4132-1	. MOUNT-FOR SPARES ONLY				01
21	MS3367-1-9	. STRAP				01
22	NAS603-10	. SCREW				02
23	MS35338-100	. WASHER				02
24	NAS1149D0316H	. WASHER				03
25	MS21044N3	. NUT				31
26	MS35207-265	. SCREW				29
27	CM2921-2	. BRACKET				02
28	5558005-4	. BRACKET-CLAMP SUPPORT				04
29	AN743-12	. BRACKET				02
30	TA713SC02TM	. CLAMP	V84971			07
31	TA713WS03TM	. CLAMP	V84971			08
- 32	TA713WS04TM	. CLAMP	V84971			05
- 32A	TA713WS04T	. CLAMP ALT FOR TA713WS04TM	V84971			05
33	TA713WS05TM	. CLAMP	V84971			07
- 33A	TA713WS05T	. CLAMP ALT FOR TA713WS05TM	V84971			07
34	TA713WS06TM	. CLAMP	V84971			16
- 34A	TA713WS06T	. CLAMP ALT FOR TA713WS06TM	V84971			16
35	TA713WS07TM	. CLAMP	V84971			05
- 35A	TA713WS07T	. CLAMP ALT FOR TA713WS07TM	V84971			05
36	TA713WS12TM	. CLAMP	V84971			01
37	MS25083-2BC33	. JUMPER ASSY-ELECTRICAL BONDING				01
- 38	MS25083-2BC14	. JUMPER ASSY-ELECTRICAL BONDING				01
39	MS3367-1-9	. STRAP				01
40	2148	. OVAL BRAID	V92194			AR
41	MS25036-115	. TERMINAL-FSO RD10361				NP R
- 41A	RD10361	. TERMINAL				04 R

- ITEM NOT ILLUSTRATED

A38489

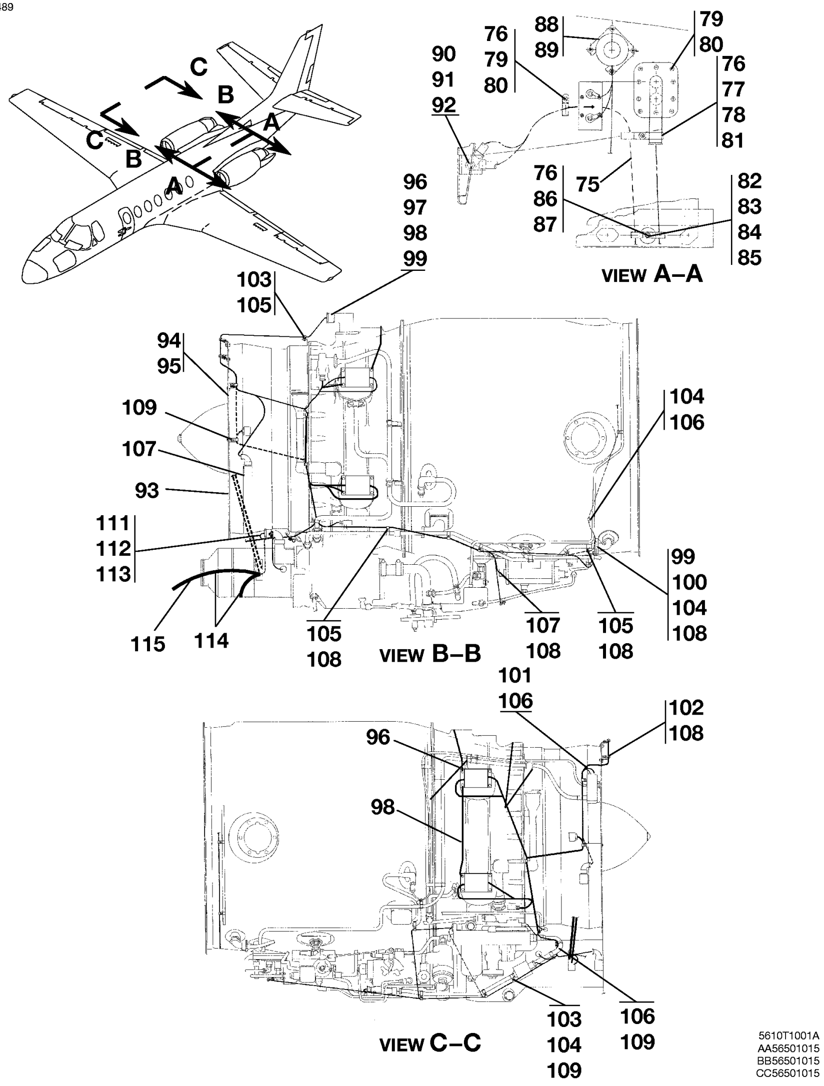

POWERPLANT WIRE HARNESS
FIGURE 01 (SHEET 2)

FIG ITEM	PART NUMBER	NOMENCLATURE 1 2 3 4 5 6 7		UNITS PER ASSY
01				
75	6578001-1-05	. WIRE BUNDLE ASSY-RH		01
76	TA713WS13TM	. CLAMP	V84971	04
77	TA713WS12TM	. CLAMP	V84971	01
78	NAS603-5	. SCREW		01
79	NAS602-6	. SCREW		11
80	NAS1149FN816P	. WASHER		11
81	MS21044N3	. NUT		01
82	J4624-53	. STANDOFF		01
83	6558005-11	. MODIFIED STANDOFF		01
84	MS9350-11	. CLAMP		02
		ATTACHING PARTS		
85	MS24693-S95	. SCREW		01
86	MS35338-44	. WASHER		01
87	MS35649-2254	. NUT		01
		—*—		
88	FSU28	. NUT RING	V04967	01
		ATTACHING PARTS		
89	NAS602-7	. SCREW		04
		—*—		
90	AN6-10	. BOLT		01
91	MS27183-13	. WASHER		02
92	MS21044N6	. NUT		01
93	TA713WS03T	. CLAMP	V84971	02
94	S2034-1	. MOUNT-FSO S4132-1		NP
- 94A	S4132-1	. MOUNT-FOR SPARES ONLY		01
		ATTACHING PARTS		
95	MS3367-1-9	. STRAP		01
		—*—		
96	NAS603-10	. SCREW		02
97	MS35338-100	. WASHER		02
98	NAS1149D0316H	. WASHER		03
99	MS21044N3	. NUT		31
100	MS35207-265	. SCREW		29
101	CM2921-2	. BRACKET		02
102	5558005-4	. BRACKET-CLAMP SUPPORT		05
103	AN743-12	. BRACKET		02
104	TA713SC02TM	. CLAMP	V84971	09
- 104A	TA713SC02TF	. CLAMP ALT FOR TA713SC02TM	V84971	09
105	TA713WS03TM	. CLAMP	V84971	04
106	TA713WS04TM	. CLAMP	V84971	05
- 106A	TA713WS04T	. CLAMP ALT FOR TA713WS04TM	V84971	05
107	TA713WS05TM	. CLAMP	V84971	04
- 107A	TA713WS05T	. CLAMP ALT FOR TA713WS05TM	V84971	04
108	TA713WS06TM	. CLAMP	V84971	20
- 108A	TA713WS06T	. CLAMP ALT FOR TA713WS06TM	V84971	20
109	TA713WS07TM	. CLAMP	V84971	07
- 109A	TA713WS07T	. CLAMP ALT FOR TA713WS07TM	V84971	07
- 110	TA713WS08TM	. CLAMP	V84971	02
- 110A	TA713WS08T	. CLAMP ALT FOR TA713WS08TM	V84971	02
111	MS25083-2BC33	. JUMPER ASSY-ELECTRICAL BONDING		01
112	MS25083-2BC14	. JUMPER ASSY-ELECTRICAL BONDING		01
113	MS3367-1-9	. STRAP		01
114	2148	. OVAL BRAID	V92194	AR
115	MS25036-115	. TERMINAL-FSO RD10361		NP R
- 115A	RD10361	. TERMINAL		04 R

- ITEM NOT ILLUSTRATED

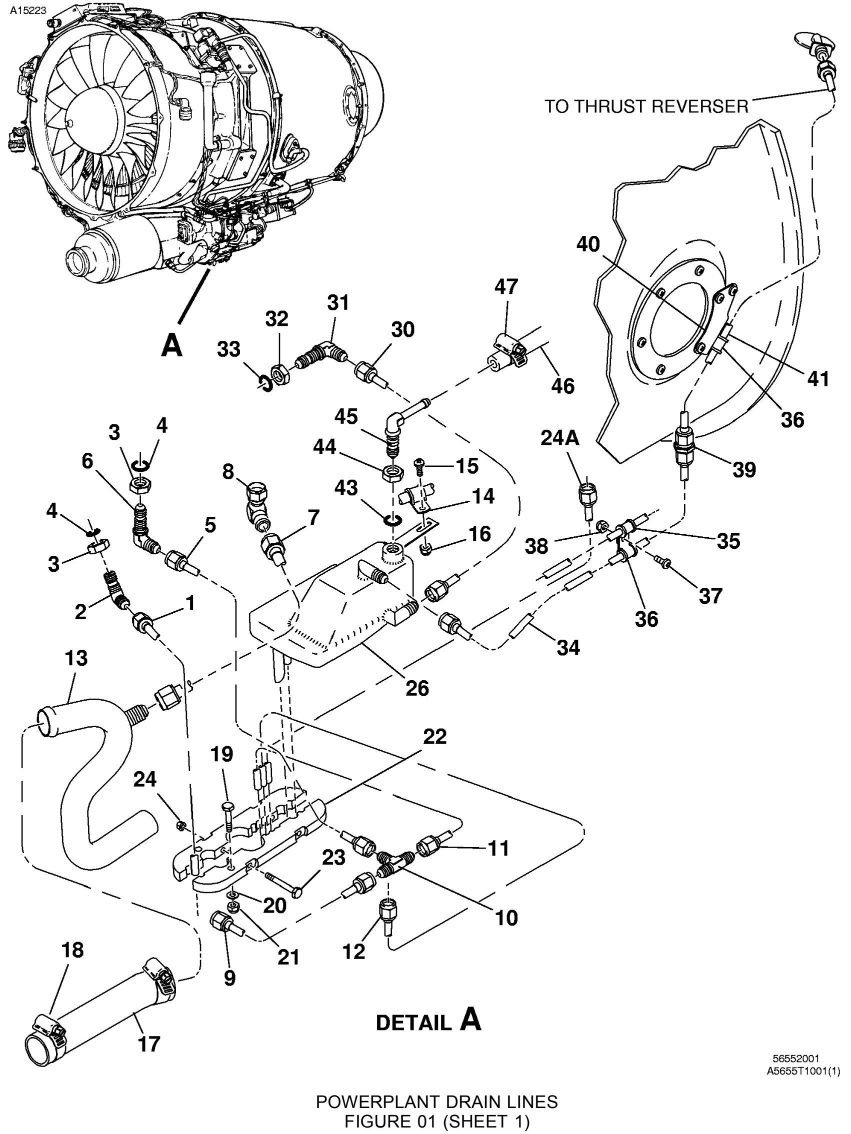

POWERPLANT DRAIN LINES
FIGURE 01 (SHEET 1)

FIG ITEM	PART NUMBER	NOMENCLATURE 1 2 3 4 5 6 7				UNITS PER ASSY
01						
-		POWERPLANT DRAIN LINES		0001	0538	RF
1	6555006-5	. TUBE ASSY-FUEL PUMP SEAL DRAIN FORWARD				02
2	CM3694D4	. ELBOW 45				02
3	AN924-4D	. NUT				02
4	MS29512-04	. O-RING				04
5	6555006-7	. TUBE ASSY-FUEL FLOW DIVIDER DRAINT				02
6	AS1038W0404	. ELBOW				02 R
7	6555006-9	. TUBE ASSY-COMBUSTER DRAIN				02
8	2071-6-6S	. SWIVEL FITTING				02
9	6555006-12	. TUBE ASSY-STARTER/GENERATOR CAVITY DRAIN				02
10	AN824-4D	. TEE				02
11	6555006-14	. TUBE ASSY-DRAIN				02
12		. LINE ASSY-HYDRAULIC PUMP DRAIN-REFER TO 29-10-00 FIGURE 01				RF
13	6555066-1	. BREATHER TUBE ASSY-ENGINE				02
14	MS21919WDG6	. CLAMP		0001	0259	06
- 14A	MS21919WDG6	. CLAMP REFER TO NOTE 1		0260	0315	04
- 14B	MS21919WDG6	. CLAMP REFER TO NOTE 2		0316	0538	02
- 14C	TA12C59H106CC	. CLAMP REFER TO NOTE 2	V84971	0316	0538	02
		ATTACHING PARTS				
15	MS27039-1-08	. SCREW				01
16	MS21044N3	. NUT				01
		—*—				
17	S51-16-26	. HOSE				02
18	S1891-12S	. CLAMP				04
19	AN3-11A	. BOLT ATTACH SENSOR				04
20	NAS1149F0363P	. WASHER ATTACH SENSOR				04
21	MS21044N3	. NUT ATTACH SENSOR				04
22	6555037-1	. CLAMP BLOCK HALF				04
		ATTACHING PARTS				
23	AN3-14A	. BOLT		0002	0337	02
- 23A	AN3-16A	. BOLT		0338	0538	02
- 23B	NAS1149C0332R	. WASHER		0338	0538	02
24	MS21042-3	. NUT				02
		—*—				
24A	6555006-20	. TUBE ASSY-FUEL EXHAUST DUCT DRAIN				02
- 25		. DELETED-NOT USED				
26	6555028-6	. CANISTER ASSY-ENGINE OVERBOARD FUEL DRAIN				02
- 27		. DELETED-NOT USED				
- 28		. DELETED-NOT USED				
- 29		. DELETED-NOT USED				
30	6555006-16	. TUBE ASSY-FUEL FLOW DIVIDER DRAIN				02
31	AS1038W0404	. ELBOW				02 R
32	AN924-4D	. NUT				02
33	MS29512-04	. O-RING				02
34	5555000-75	. LINE ASSY-CANISTER PRESSURIZATION				02
35	TA12C59H06CC	. CLAMP	V84971			02
36	MS21919WDG4	. CLAMP				04
		ATTACHING PARTS				
37	MS27039-1-08	. SCREW				01
38	MS21044N3	. NUT				01
		—*—				
39	AN815-4D	. UNION				04
40	5555050-26	. BRACKET-CLAMP ATTACH		0203	0538	02
41	5555000-77	. LINE ASSY-CANISTER PRESSURIZATION				02
- 42		. DELETED-NOT USED				
43	MS29512-04	. O-RING				02
44	AN924-4D	. NUT				02
45	AN838-4D	. ELBOW				02
46		. LINE ASSY REFER TO 28-20-01 FIGURE 01				RF
47	S1891-6S	. CLAMP				02

NOTE 1—AIRPLANES -0260 THRU -0315 NOT INCORPORATING SB560-71-02

NOTE 2—AIRPLANES -0316 THRU -0538 AND AIRPLANES -0260 THRU -0315 INCORPORATING SB560-71-02.

- ITEM NOT ILLUSTRATED

A9285

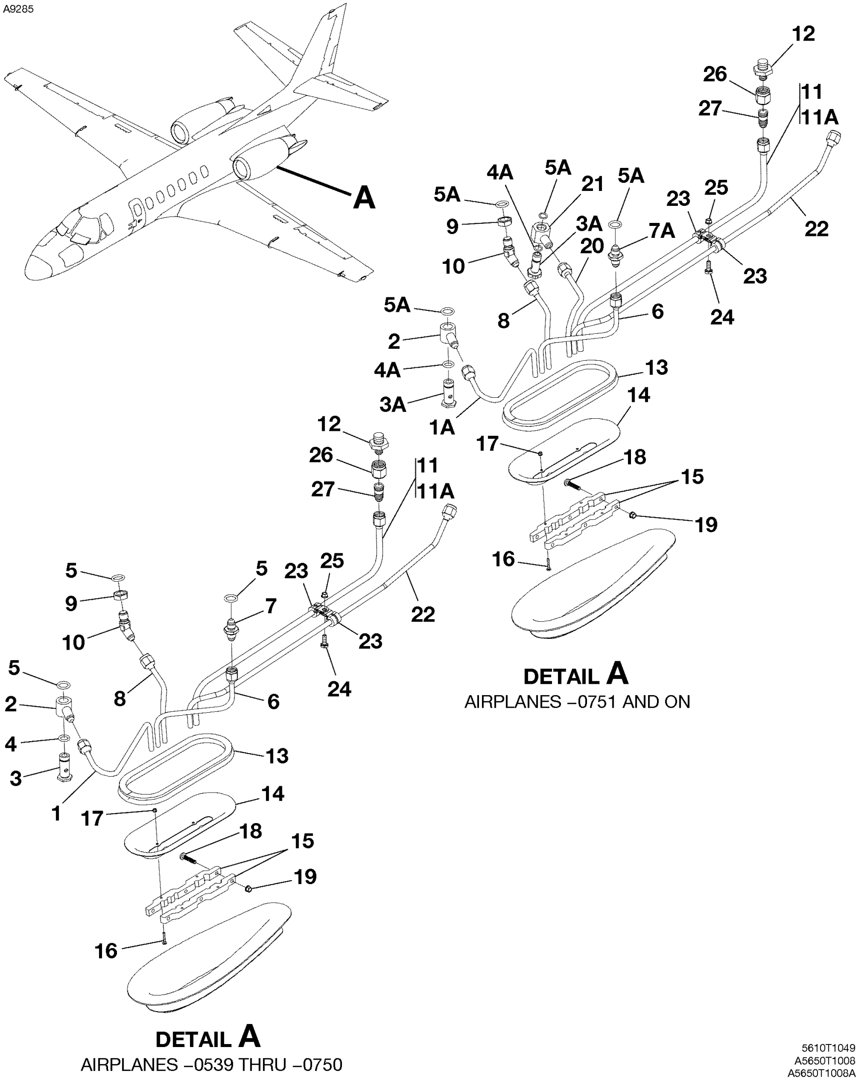

5610T1049
A5650T1008
A5650T1008A

POWERPLANT DRAIN LINES - LH AND RH
FIGURE 02 (SHEET 1)

FIG ITEM	PART NUMBER	NOMENCLATURE 1 2 3 4 5 6 7				UNITS PER ASSY	
02							
-		POWERPLANT DRAIN LINES - LH AND RH		0539	& ON	RF	
1	6555530-2	. TUBE ASSY-STARTER/GENERATOR DRAIN-REFER TO NOTE 1		0539	0750	02	R
1A	6555631-3	. TUBE ASSY-STARTER/GENERATOR DRAIN-REFER TO NOTE 2		0751	& ON	02	R
2	NAS553-4D	. ELBOW				02	
3	NAS551-4D	. BOLT		0539	0750	02	
3A	NAS551-4D	. BOLT		0751	& ON	04	
4	MS29512-04	. O-RING		0539	0750	02	
4A	MS29512-04	. O-RING		0751	& ON	04	
5	MS29513-011	. O-RING		0539	0750	06	
5A	MS29513-011	. O-RING		0751	& ON	08	
6	6555530-3	. TUBE ASSY-HYDRAULIC PUMP DRAIN				02	
7	AN815-4D	. UNION		0539	0750	02	
7A	AS5174D0404	. UNION		0751	& ON	02	
8	6555530-4	. TUBE ASSY-FUEL CONTROL UNIT DRAIN				02	
9	AN924-4D	. NUT				02	
10	AN837-4D	. ELBOW				02	
11	6555530-6	. TUBE ASSY-COMBUSTOR DRAIN REFER TO NOTE 3		0539	& ON	02	R
11A	6555641-2	. TUBE ASSY-COMBUSTOR DRAIN REFER TO NOTE 4				02	R
12	ST3317-01	. UNION	V00198			02	
13	8385	. SEAL-DRAIN	V11960			02	
14	6655200-13	. PLATE-SEAL MOUNT				02	
15	6555530-7	. SUPPORT HALF-POWERPLANT DRAINS-REFER TO NOTE 4				04	
- 15A	6655200-17	. BLOCK FAIRLEAD LH-REFER TO NOTE 4				02	R
- 15B	6655200-18	. BLOCK FAIRLEAD RH-REFER TO NOTE 4				02	R
16	MS35207-218	. SCREW				08	
17	MS21042-04	. NUT				08	
18	MS35207-266	. SCREW				08	
19	MS21042-3	. NUT				08	
20	6555631-4	. PMA TUBE ASSY		0751	& ON	02	
21	NAS552-4D	. ELBOW		0751	& ON	02	
22	6555641-1	. TUBE ASSY-FUEL MANIFOLD REFER TO NOTE 4				01	R
23	MS21919WCH4	. CLAMP-REFER TO NOTE 4				02	R
24	AN3C4A	. BOLT-REFER TO NOTE 4				01	R
25	MS21043-3	. NUT-REFER TO NOTE 4				01	R
26	AN818-6D	. NUT-REFER TO NOTE 4				01	R
27	NAS1564D6-4	. REDUCER-REFER TO NOTE 4				01	R

NOTE 1—AIRPLANES -0539 THRU -0750 AND AIRPLANES -0539 THRU -0707 AND AIRPLANES -0751 & ON INCORPORATING SB560-71-09. R

NOTE 2—AIRPLANES -0751 & ON AND AIRPLANES -0539 THRU -0707 AND AIRPLANES -0751 & ON INCORPORATING SB560-71-09. R

NOTE 3—AIRPLANES -0539 & ON AND AIRPLANES -0539 THRU -0707 AND AIRPLANES -0751 & ON INCORPORATING SB560-71-09. R

NOTE 4—AIRPLANES -0539 THRU -0707 AND AIRPLANES -0751 & ON INCORPORATING SB560-71-09. R

- ITEM NOT ILLUSTRATED

CHAPTER

73

ENGINE FUEL AND CONTROL

CHAPTER SECTION SUBJECT		NUMBER OF PAGES	DATE
73 - TITLE			
73 - LIST OF EFFECTIVE PAGES			
73 - RECORD OF TEMPORARY REVISIONS			
73 - TABLE OF CONTENTS			
73-10-00	Figure 01	2	Mar 1/2011
73-10-00	Figure 02	2	Mar 1/2010
73-10-00	Figure 03	2	Mar 1/2011
73-30-00	Figure 01	2	Feb 1/2012

© Cessna Aircraft Company

SUBJECT	CHAPTER SECTION SUBJECT	FIGURE	EFFECTIVITY START	EFFECTIVITY END
ENGINE FUEL SUPPLY SYSTEM	73-10-00	01	0001	0538
ENGINE FUEL SUPPLY SYSTEM - LH	73-10-00	02	0539	& ON
ENGINE FUEL SUPPLY SYSTEM - RH	73-10-00	03	0539	& ON
ENGINE FUEL INDICATING SYSTEM	73-30-00	01		

© Cessna Aircraft Company

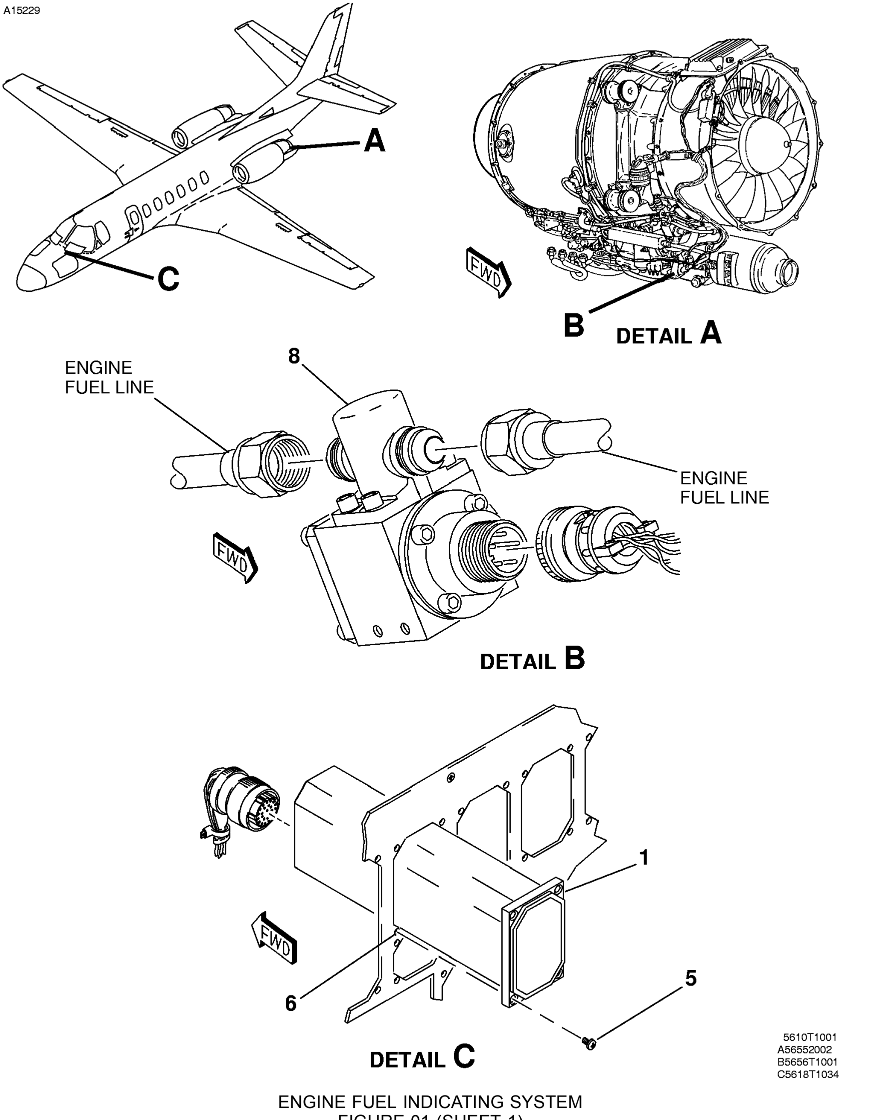

ENGINE FUEL INDICATING SYSTEM
FIGURE 01 (SHEET 1)

FIG ITEM	PART NUMBER	NOMENCLATURE 1 2 3 4 5 6 7				UNITS PER ASSY
01						
-		ENGINE FUEL INDICATING SYSTEM				RF
1	9912147-16	. INDICATOR-FUEL FLOW IND15 REFER TO NOTE 1		0001	0259	01
- 2	9912430-3	. INDICATOR-FUEL FLOW/FUEL QTY REFER TO NOTE 1		0260	0405	01
- 3	9912430-7	. INDICATOR-FUEL FLOW/FUEL QTY		0406	0538	01
- 4	9912560-5	. INDICATOR-FUEL FLOW/FUEL QTY REFER TO NOTE 2		0539	0625	01
		ATTACHING PARTS				
5	MS35214-26	. SCREW		0001	0259	04
6	H111F1C93-110	. INSERT	V71286	0001	0259	04
- 7	64512B	. CLAMP	V91893	0260	0625	01
		—*—				
8	9912031-6	. TRANSMITTER-LH FUEL FLOW XMTR 13		0001	0259	01
- 9	9912031-6	. TRANSMITTER-RH FUEL FLOW XMTR 14		0001	0259	01
- 10	9914413-1	. TRANSMITTER-LH AND RH FUEL FLOW XMTR		0260	& ON	01 R
		ATTACHING PARTS				
- 11	AN3-17A	. BOLT		0539	& ON	03 R
- 12	NAS1149F0332P	. WASHER		0539	& ON	03 R
		—*—				
- 13	6578202-1	. WIRE BUNDLE ASSY-FUEL FLOW/FUEL QTY		0001	0259	01

NOTE 1—REFER TO LIST OF VENDOR PUBLICATIONS FOR PUBLICATIONS AVAILABLE FOR THIS PART.

NOTE 2—REFER TO 77-10-00 FIGURE 03 FOR AIRPLANES 0626 & ON.

- ITEM NOT ILLUSTRATED

CHAPTER 74

IGNITION

CHAPTER SECTION SUBJECT		NUMBER OF PAGES	DATE
74 - TITLE			
74 - LIST OF EFFECTIVE PAGES			
74 - RECORD OF TEMPORARY REVISIONS			
74 - TABLE OF CONTENTS			
74-30-00	Figure 01	2	Jun 5/2000

© Cessna Aircraft Company

SUBJECT	CHAPTER SECTION SUBJECT	FIGURE	EFFECTIVITY START	EFFECTIVITY END
IGNITION SYSTEM	74-30-00	01		

© Cessna Aircraft Company

CHAPTER SECTION SUBJECT		NUMBER OF PAGES	DATE
76 - TITLE			
76 - LIST OF EFFECTIVE PAGES			
76 - RECORD OF TEMPORARY REVISIONS			
76 - TABLE OF CONTENTS			
76-10-00	Figure 01	8	Aug 1/2013
76-10-00	Figure 02	6	Mar 1/2010
76-10-00	Figure 03	6	Mar 1/2010
76-10-01	Figure 01	8	Aug 1/2015
76-10-01	Figure 01A	8	Aug 1/2013
76-10-01	Figure 02	6	Feb 1/2012
76-10-01	Figure 03	4	Aug 1/2015
76-10-01	Figure 04	8	Aug 1/2013
76-10-01	Figure 04A	10	Feb 1/2012
76-10-02	Figure 01	4	Aug 1/2007
76-10-02	Figure 02	4	Aug 1/2015
76-15-00	Figure 01	2	Feb 1/2007

© Cessna Aircraft Company

SUBJECT	CHAPTER SECTION SUBJECT	FIGURE	EFFECTIVITY START	EFFECTIVITY END
THROTTLE CABLES	76-10-00	01	0001	0538
THROTTLE CABLES - FORWARD	76-10-00	02	0539	& ON
THROTTLE CABLES - AFT	76-10-00	03	0539	& ON
CONTROL QUADRANT	76-10-01	01	0001	0538
CONTROL QUADRANT ASSEMBLY - DUAL GO-AROUND SWITCHES	76-10-01	01A	0260	0538
CONTROL QUADRANT - SWITCHES AND LEVERS	76-10-01	02	0001	0538
CONTROL QUADRANT	76-10-01	03	0539	& ON
CONTROL QUADRANT ASSEMBLY	76-10-01	04	0539	0750
CONTROL QUADRANT ASSEMBLY	76-10-01	04A	0751	& ON
ENGINE SYNCHRONIZER	76-10-02	01	0001	0538
ENGINE SYNCHRONIZER	76-10-02	02	0539	& ON
FADEC ANNUNCIATION	76-15-00	01	0752	& ON

© Cessna Aircraft Company

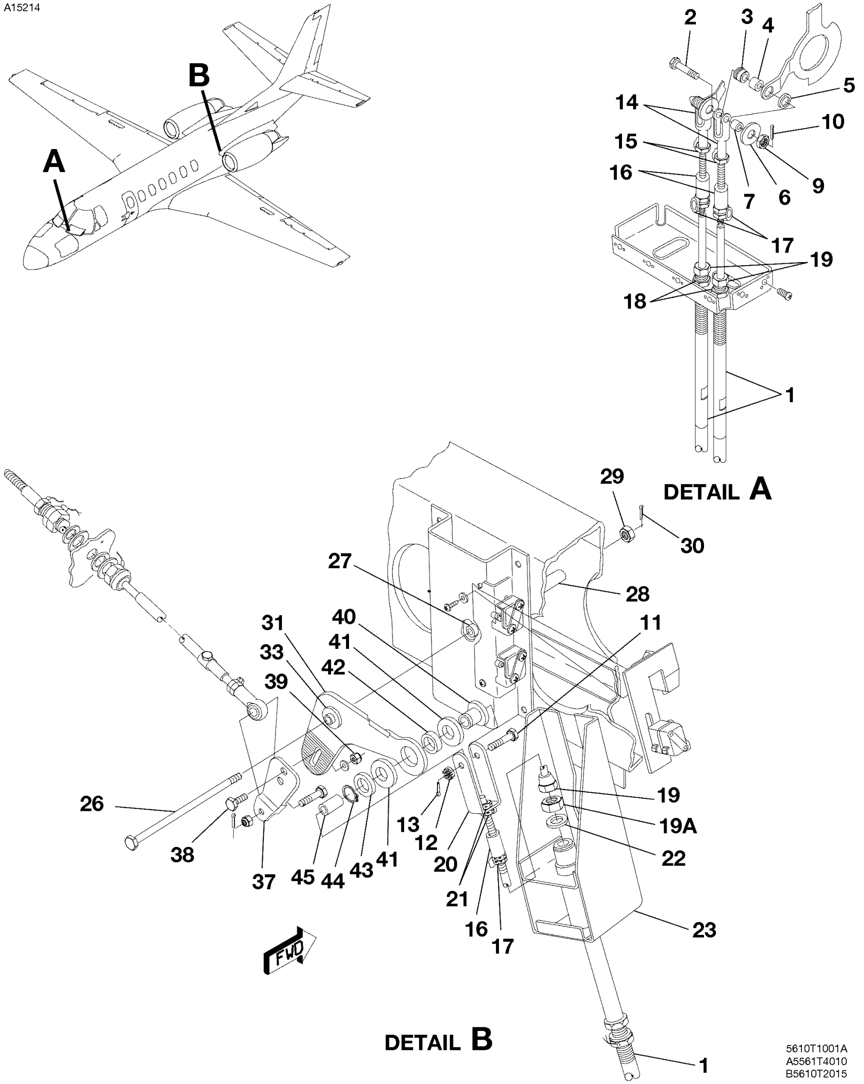

THROTTLE CABLES
FIGURE 01 (SHEET 1)

FIG ITEM	PART NUMBER	NOMENCLATURE 1 2 3 4 5 6 7				UNITS PER ASSY
01						
-		THROTTLE CABLES		0001	0538	RF
1	C80597-5	. CONTROL CABLE LH AND RH	V04638			02
		ATTACHING PARTS				
2	NAS464-4-12	. BOLT-PEDESTAL END				01
3	5565800-12	. BUSHING				01
4	5565800-11	. SPACER				01
5	5565800-13	. WASHER				01
6	MS27183-9	. WASHER				01
7	NAS42HT8-15	. SPACER-LH THROTTLE CONTROL ASSY				01
- 8	NAS42HT8-10	. SPACER-RH THROTTLE CONTROL ASSY				01
9	MS17826-4	. NUT				01
10	MS24665-134	. COTTER PIN				01
11	AN4-11	. BOLT-ENGINE END				01
12	MS17826-4	. NUT				01
13	MS24665-210	. COTTER PIN				01
		—*—				
14	MS27975-1	. CLEVIS PEDESTAL END				02
15	NAS509-4	. JAMNUT				02
16	111B0100	. BALL JOINT LH AND RH	V04638			04
17	NAS509-4	. JAMNUT				04
18	AN924-4J	. JAMNUT	V04638			04
19	2112B0093-1	. SEAL NUT	V04638			04
19A	MS21083N7	. NUT				02
20	5565800-38	. CLEVIS-BELLCRANK END LH AND RH				02
21	NAS509-4	. JAMNUT				04
22	5512043-16	. WASHER				02
23		. BRACKET ASSY-THROTTLE CONTROL REFER TO 53-13-00 FIGURE 01				RF
- 24	5560001-61	. BELLCRANK ASSY-LH				01
- 25	5560001-60	. BELLCRANK ASSY-RH				01
		ATTACHING PARTS				
26	AN4-51	. BOLT				01
27	NAS43HT4-77	. SPACER				01
28	NAS43HT4-178	. SPACER				01
29	MS17825-4	. NUT				01
30	MS24665-208	. COTTER PIN				01
		—*—				
31	5560001-59	. . BELLCRANK-LH				01
- 32	5560001-58	. . BELLCRANK-RH				01
33	MS20218-1	. . BEARING-FSO BC4W10				NP
- 33A	BCP4W10	. . BEARING				01
- 34	BC4W10	. . BEARING ALT FOR MS20218-1	V21335			01
- 35	5315084-1	. . BEARING ALT FOR MS20218-1				01
- 36	NAS1149F0416P	. . WASHER USED WITH 5315084-1 BEARING				02
37	5565822-6	. . CLEVIS				01
		ATTACHING PARTS				
38	AN3-4A	. . BOLT				02
39	MS21044N3	. . NUT				02
		—*—				
40	5565800-37	. BUSHING-LH AND RH				02
41	5565800-34	. SPACER-DAMPING-LH AND RH				04
42	5565800-33	. INSERT-DAMPING-LH AND RH				02
43	5565800-36	. WASHER-LH AND RH				02
44	MS16624-1050	. RING-RETAINING LH AND RH				02
45	5565800-35	. SPACER-LH AND RH				02

- ITEM NOT ILLUSTRATED

A15219

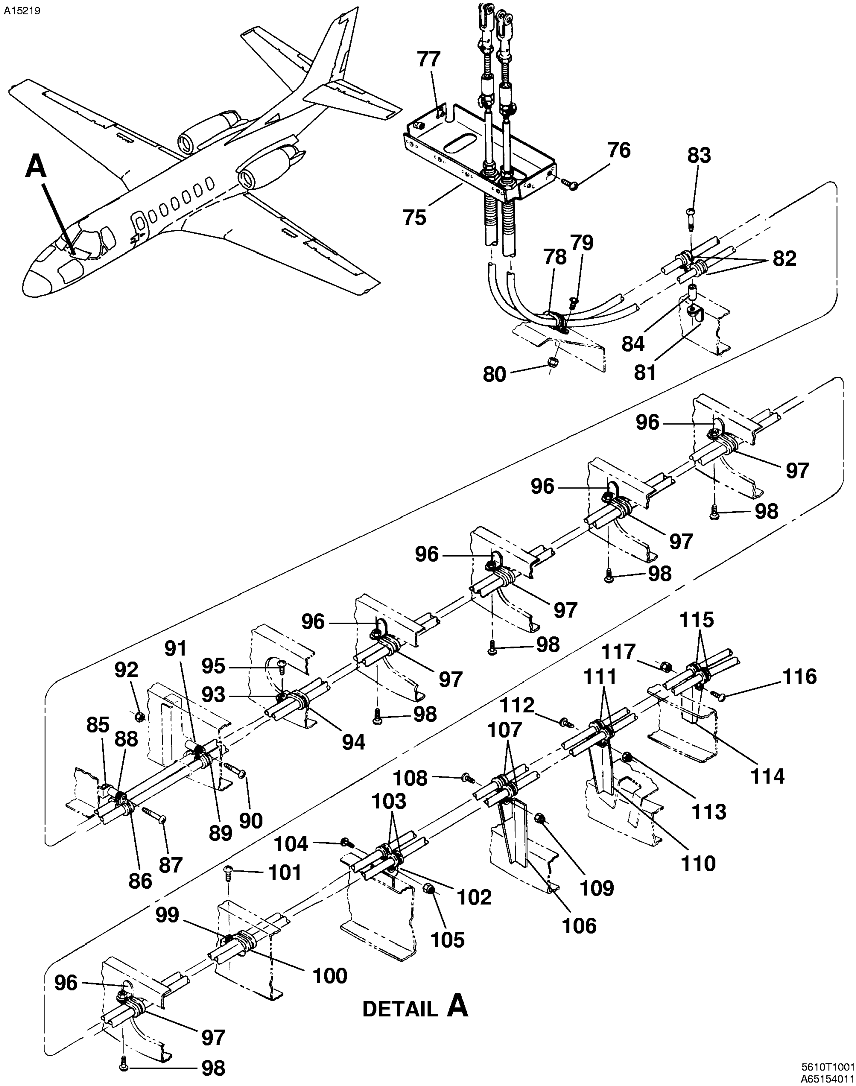

5610T1001
A65154011

THROTTLE CABLES
FIGURE 01 (SHEET 2)

FIG ITEM	PART NUMBER	NOMENCLATURE 1 2 3 4 5 6 7		UNITS PER ASSY
01				
75	5565819-12	. ADJUST BRACKET ASSY-THROTTLE		01
		ATTACHING PARTS		
76	MS27039-1-07	. SCREW		08
		—*—		
77	MS21070L3	. . NUTPLATE		08
78	NAS1714D2-6K	. CLAMP FS112.00		01
		ATTACHING PARTS		
79	MS27039-0806	. SCREW		01
80	MS21042-08	. NUT		01
		—*—		
81	TA102CHTD2-06-12	. CLAMP-BRACKET FS134.00	V84971	01
82	TA713D006CR	. CLAMP	V84971	02
		ATTACHING PARTS		
83	NAS603-16	. SCREW		01
84	NAS43HT3-13	. SPACER		01
		—*—		
85	TA102CHTD2-06-10	. CLAMP-BRACKET FS146.75	V84971	01
86	TA713D006CR	. CLAMP	V84971	02
		ATTACHING PARTS		
87	MS27039-1-19	. SCREW		01
88	NAS43HT3-36	. SPACER		01
		—*—		
89	TA713D006CR	. CLAMP FS152.00	V84971	02
		ATTACHING PARTS		
90	MS27039-1-19	. SCREW		01
91	NAS43HT3-36	. SPACER		01
92	MS21044N3	. NUT		01
		—*—		
93	TA102CHTD2-06-10	. CLAMP-BRACKET FS168.00	V84971	01
94	NAS1714D2-6K	. CLAMP		01
		ATTACHING PARTS		
95	MS27039-1-08	. SCREW		01
		—*—		
96	TA102CHTD2-06-10	. CLAMP-BRACKET FS179.02, 206.98, 226.98, 253.40 AND 273.40	V84971	05
97	NAS1714D2-6K	. CLAMP		05
		ATTACHING PARTS		
98	MS27039-1-08	. SCREW		01
		—*—		
99	TA102CHTD2-06-10	. CLAMP-BRACKET FS295.60	V84971	01
100	NAS1714D2-6K	. CLAMP		01
		ATTACHING PARTS		
101	MS27039-1-08	. SCREW		01
		—*—		
102	6565800-16	. BRACKET-CLAMP FS307.78		01
103	TA713D006CR	. CLAMP	V84971	02
		ATTACHING PARTS		
104	MS27039-1-08	. SCREW		01
105	MS21044N3	. NUT		01
		—*—		
106	6565800-4	. BRACKET-CLAMP FS320.57		01
107	TA713D006CR	. CLAMP	V84971	02
		ATTACHING PARTS		
108	MS27039-1-08	. SCREW		01
109	MS21044N3	. NUT		01
		—*—		
110	6565800-15	. BRACKET-CLAMP FS329.12		01
111	TA713D006CR	. CLAMP	V84971	02
		ATTACHING PARTS		
112	MS27039-1-08	. SCREW		01
113	MS21044N3	. NUT		01
		—*—		
114	6565800-10	. BRACKET-CLAMP FS337.59		01
115	TA713D006CR	. CLAMP	V84971	02
		ATTACHING PARTS		
116	MS27039-1-08	. SCREW		01
117	MS21044N3	. NUT		01
		—*—		

- ITEM NOT ILLUSTRATED

A15222

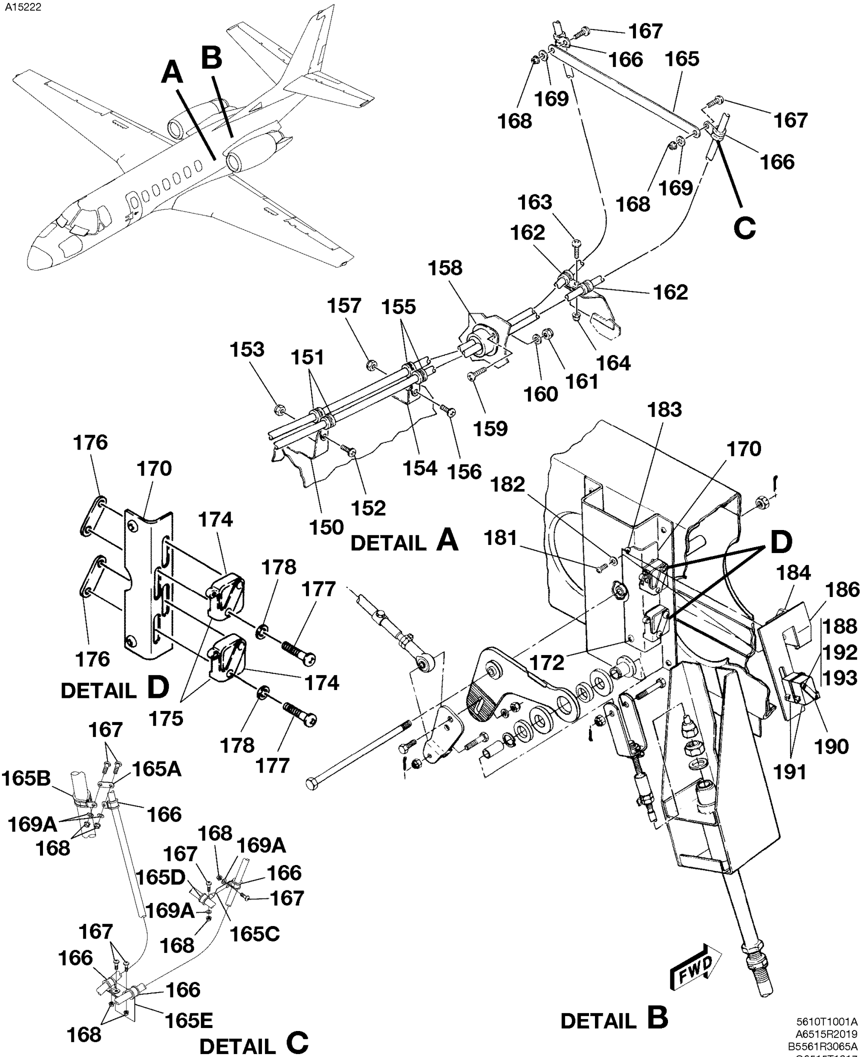

5610T1001A
A6515R2019
B5561R3065A
C6515T1017
D6515R1017

AIRPLANES −0463 THRU −0538

THROTTLE CABLES
FIGURE 01 (SHEET 3)

FIG ITEM	PART NUMBER	NOMENCLATURE 1 2 3 4 5 6 7				UNITS PER ASSY
01						
150	6565370-11	. BRACKET-CLAMP FS344.00				01
151	TA713D006CR	. CLAMP	V84971			02
		ATTACHING PARTS				
152	MS27039-1-08	. SCREW				01
153	MS21044N3	. NUT				01
		—*—				
154	6565800-7	. BRACKET-CLAMP FS349.56				01
155	TA713D006CR	. CLAMP	V84971			02
		ATTACHING PARTS				
156	MS27039-1-08	. SCREW				01
157	MS21044N3	. NUT				01
		—*—				
158	S45A13	. SEAL FSO NMCS45A13				01
- 158A	NMCS45A13	. SEAL	V03296			01
		ATTACHING PARTS				
159	NAS602-6	. SCREW				02
160	NAS620-8L	. WASHER				02
161	MS21044N08	. NUT				02
		—*—				
162	MS21919WDG5	. CLAMP				02
		ATTACHING PARTS				
163	MS27039-1-06	. SCREW				01
164	MS21042-3	. NUT				01
		—*—				
165	5565800-43	. STRAP WITH THRUST REVERSER		0001	0462	01
165A	6565800-27	. STRAP		0463	0538	01 R
165B	MS21919WDG16	. CLAMP		0463	0538	01 R
165C	6565800-28	. STRAP		0463	0538	01 R
165D	MS21919WDG8	. CLAMP		0463	0538	01 R
165E	6565800-26	. BRACKET		0463	0538	01 R
166	MS21919WDG5	. CLAMP				02
		ATTACHING PARTS				
167	MS27039-1-09	. SCREW				AR R
168	MS21042-3	. NUT				AR R
169	NAS1149F0332P	. WASHER				AR R
169A	AN960-10L	. WASHER-ALT FOR NAS1149F0332P				AR R
		—*—				
170	5560001-19	. BRACKET-LH SWITCH MOUNT				01
- 171	5560001-20	. BRACKET-RH SWITCH MOUNT				01
		ATTACHING PARTS				
172	MS24693-S273	. SCREW				01
- 173	NAS1149F0463P	. WASHER				02
		—*—				
174	V3-1001	. SWITCH	V91929			04
175	JV5	. ACTUATOR	V91929			04
176	5560001-27	. PLATE-THREADED				04
		ATTACHING PARTS				
177	MS35206-218	. SCREW				02
178	MS35333-36	. WASHER				02
		—*—				
- 179	5565800-45	. BRACKET ASSY-LH SWITCH				01
- 180	5565800-46	. BRACKET ASSY-RH SWITCH				01
		ATTACHING PARTS				
181	MS35207-265	. SCREW				01
182	NAS1149F0363P	. WASHER				01
183	NAS1149F0463P	. WASHER				02
		—*—				
184	5565800-31	. . BRACKET-LH				01
- 185	5565800-32	. . BRACKET-RH				01
186	5565800-17	. . BRACE-LH				01
- 187	5565800-16	. . BRACE-RH				01
188	5565800-28	. . PLATE-THREADED				01
- 189	S1038-1	. . SHIM FRICTION				01
190	JV82	. . ACTUATOR	V91929			01
191	V3-1001	. . SWITCH	V91929			02
		ATTACHING PARTS				
192	MS35206-221	. . SCREW				02
193	MS35333-36	. . WASHER-LOCK				02
		—*—				

- ITEM NOT ILLUSTRATED

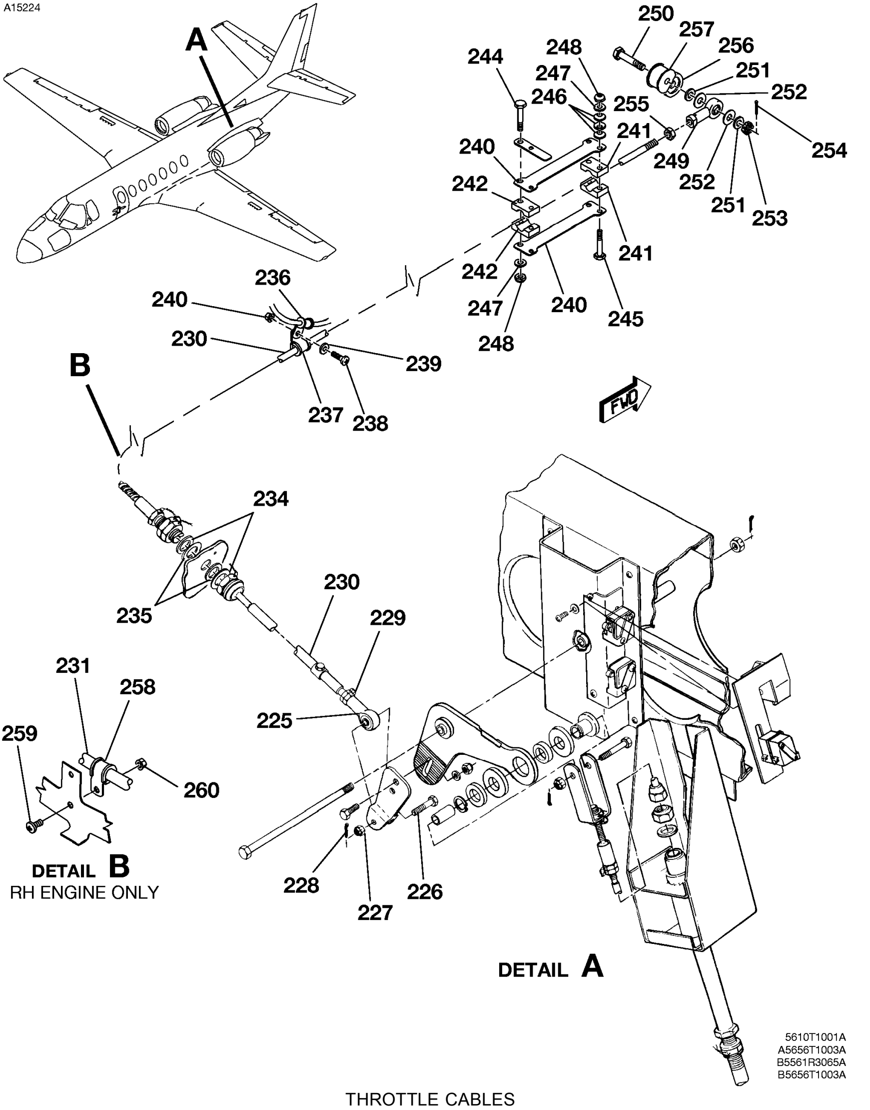

THROTTLE CABLES
FIGURE 01 (SHEET 4)

FIG ITEM	PART NUMBER	NOMENCLATURE 1 2 3 4 5 6 7				UNITS PER ASSY
01						
225	REPB3N	. ROD END-LH AND RH	V21335			02
		ATTACHING PARTS				
226	NAS464P3-9	. BOLT				01
227	MS17825-3	. NUT				01
228	MS24665-132	. COTTER PIN				01
		—*—				
229	NAS509-4	. JAMNUT-LH AND RH				02
230	7-42346-1	. CABLE-THROTTLE LH AFT FSO 580-291-851 REFER TO NOTE 1	V78710	0002	0417	NP
- 230A	580-291-851	. CABLE-THROTTLE LH AFT	V06970	0418	0538	01
231	7-42346-3	. CABLE-THROTTLE RH AFT FSO 580-291-852 REFER TO NOTE 1	V78710	0002	0417	NP
- 231A	580-291-852	. CABLE-THROTTLE RH AFT	V06970	0418	0538	01
- 232	12698-668	. . INNER CABLE USE WITH 7-42346-1	V78710			01
- 233	12698-816	. . INNER CABLE USE WITH 7-42346-3	V78710			01
234	5565800-7	. SPACER				04
235	NAS1149F1063P	. WASHER				04
236	TA12C59D03HA	. CLAMP	V84971			02
237	TA12C59D05HA	. CLAMP	V84971			02
		ATTACHING PARTS				
238	MS27039-1-10	. SCREW				02
239	NAS1149F0363P	. WASHER				02
		—*—				
240	5560001-37	. TIE STRAP FSO 5560001-70 REFER TO NOTE 1		0002	0417	NP
- 240A	5560001-70	. TIE STRAP REFER TO NOTE 1		0002	0417	02
241	5560001-38	. FRICTION BLOCK REFER TO NOTE 1		0002	0417	02
242	5560001-48	. CLAMP REFER TO NOTE 1		0002	0417	02
- 243		. DELETED-NOT USED				
244	AN3-10A	. BOLT REFER TO NOTE 1		0002	0417	02
245	AN3-11A	. BOLT REFER TO NOTE 1		0002	0417	02
246	B0375-020	. WASHER-BELLEVILLE REFER TO NOTE 1	V27745	0002	0417	06
247	NAS1149F0363P	. WASHER REFER TO NOTE 1		0002	0417	04
248	MS21083N3	. NUT REFER TO NOTE 1		0002	0417	04
249	HF4M	. ROD END ASSY-LH ENGINE FSO S3059-4	V73134			NP
- 249A	S3059-4	. ROD END ASSY-LH ENGINE				01
		ATTACHING PARTS				
250	AN4-12	. BOLT				01
251	NAS1149F0463P	. WASHER				04
252	S1450-4N10-032	. WASHER				02
253	MS17825-4	. NUT				01
254	MS24665-132	. COTTER PIN				01
		—*—				
255	NAS509-4	. JAMNUT				01
256	6555052-1	. LEVER-FUEL CONTROL				01
257	202-0039-13	. SPINDLE-CAM FOLLOWER	V51563			01
258	MS21919WH6	. CLAMP-RH ENGINE				01
		ATTACHING PARTS				
259	MS27039-1-06	. SCREW				01
260	MS21042-3	. NUT				01
		—*—				

NOTE 1—WHEN REPLACING 7-42346-1 WITH 580-291-851 OR 7-42346-3 WITH 580-291-852, REMOVE 5560001-37 OR 5560001-70, 5560001-38, 5560001-48, AN3-10A, AN3-11A, B0375-020, NAS1149F0363P AND MS21083N3 AS PARTS OF FRICTION INSTALLATION.

- ITEM NOT ILLUSTRATED

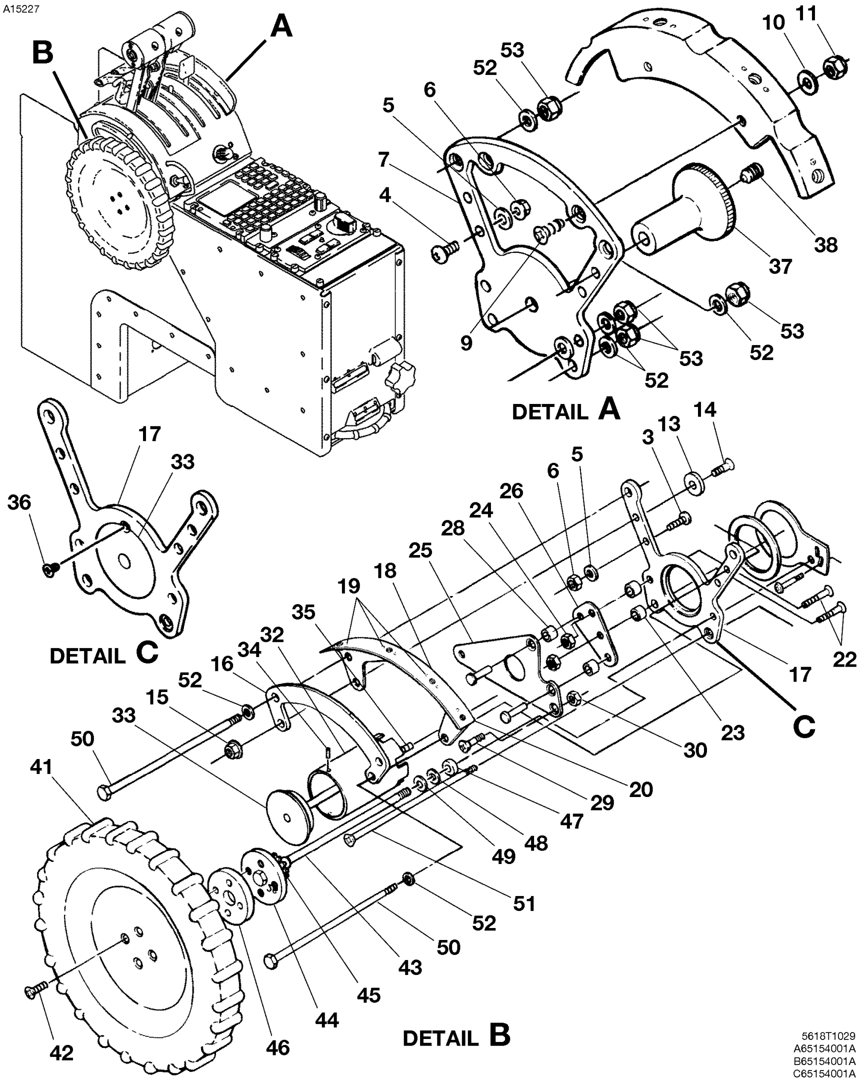

CONTROL QUADRANT
FIGURE 01 (SHEET 1)

FIG ITEM	PART NUMBER	NOMENCLATURE 1 2 3 4 5 6 7			UNITS PER ASSY
01					
-		CONTROL QUADRANT	0001	0538	RF
- 1	5565237-70	. QUADRANT ASSY-WITHOUT RH GO AROUND SWITCH FSO 5565237-72	0001	0039	01
- 1A	5565237-72	. QUADRANT ASSY-WITHOUT RH GO AROUND SWITCH	0040	0086	01
- 1B	5565237-82	. QUADRANT ASSY-WITHOUT RH GO AROUND SWITCH	0087	0192	01
- 1C	5565237-87	. QUADRANT ASSY-WITHOUT RH GO AROUND SWITCH	0193	0259	01
- 1D	5565237-87	. QUADRANT ASSY-WITHOUT RH GO AROUND SWITCH FSO 6596035-1	0260	0506	NP
- 1E	5565237-97	. QUADRANT ASSY-WITHOUT RH GO AROUND SWITCH FSO 6596035-1	0507	0538	NP
- 1F	6596035-1	. QUADRANT ASSY-SPARES ONLY	0260	0538	01
- 2		. QUADRANT ASSY-WITH RH GO AROUND SWITCH			RF
		ATTACHING PARTS			
3	MS24694-S49	. SCREW-FORWARD LH SIDE			01
4	MS27039-1-07	. SCREW-AFT LH SIDE AND FORWARD AND AFT RH SIDE			03
5	NAS1149F0332P	. WASHER			04
6	MS21042L3	. NUT			04
		—*—			
7	5565752-10	. . PLATE RH-MOUNTING	0001	0192	01
- 8	5565752-12	. . PLATE RH-MOUNTING	0193	0538	01
		ATTACHING PARTS			
9	NAS517-3-3	. . SCREW			02
10	NAS1149C0332R	. . WASHER			02
11	MS21044N3	. . NUT			02
		—*—			
- 12	5565254-1	. . MOUNT PLATE ASSY-LH			01
13	5565254-6	. . . BUTTON			01
		ATTACHING PARTS			
14	MS24693-S29	. . . SCREW			01
15	MS21042-06	. . . NUT			01
		—*—			
16	5565254-2	. . . PLATE-LH			01
17	5565254-3	. . . MOUNTING PLATE-LH			01
18	5565254-5	. . . BRACKET ASSY-LH			01
19	MS21069L08K	. . . . NUTPLATE			03
20	MS21071L08K	. . . . NUTPLATE			01
- 21	5565249-1	. . . PLATE ASSY-CAM PIVOT GUST LOCK			01
		ATTACHING PARTS			
22	MS24694-S54	. . . SCREW			02
23	NAS43HT3-16	. . . SPACER			02
24	MS21042-3	. . . NUT			02
		—*—			
25	5565249-2	. . . . PLATE-CAM PIVOT-OUTBOARD			01
26	5565249-3	. . . . PLATE			01
- 27		. . . . DELETED-NOT USED			
28	NAS42HT5-12	. . . . SPACER			02
29	MS24694-S48	. . SCREW-LH PANEL PEDESTAL			01
30	MS21042-3	. . NUT-LH PANEL PEDESTAL			01
- 31	5565805-12	. . HUB ASSY-THROTTLE			01
32	5565805-8	. . . HUB			01
33	0861219-1	. . . RETAINER			01
34	NAS561P3-5	. . . PIN			02
35	5565805-10	. . . STUD			01
36	MS24693-S23	. . SCREW-LOCK			01
37	5565256-4	. . KNOB ASSY-FRICTION ADJUST			01
38	AN565A428H4	. . . SETSCREW			01
- 39	5015051-3	. . . PLACARD			01
- 40	5565755-5	. . WHEEL ASSY-ELEVATOR TRIM	0002	0652	01
- 40A	5565755-7	. . WHEEL ASSY-ELEVATOR TRIM	0653	& ON	01
41	5565756-1	. . . WHEEL L-ELEVATOR TRIM			01
		ATTACHING PARTS			
42	NAS1189-06P16LKH	. . . SCREW			04
- 42A	NAS1189-06P16LK	. . . SCREW-ALT FOR NAS1189-06P16LKH			04
		—*—			
43	AN3-57	. . . BOLT			01
44	5565116-1	. . . SPROCKET ASSY			01
45	5565755-4	. . . BEARING			01
46	5565755-6	. . . SPACER			01
47	NAS43HT5-9	. . SPACER			01
48	NAS1149D0516K	. . WASHER			AR
49	NAS1149C0563R	. . WASHER			AR
50	AN3-52A	. . BOLT			03
51	NAS333CP50	. . BOLT			01
52	NAS1149C0332R	. . WASHER			06
53	MS21044N3	. . NUT			04

- ITEM NOT ILLUSTRATED

A15231

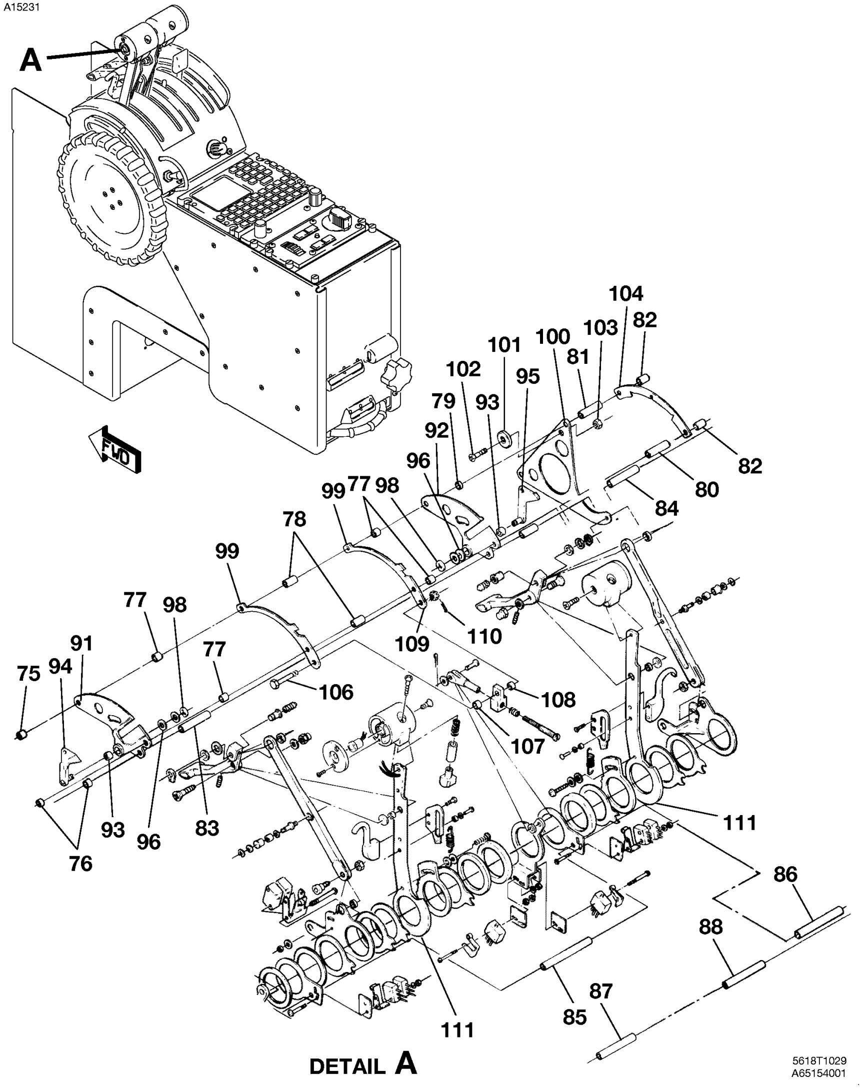

CONTROL QUADRANT
FIGURE 01 (SHEET 2)

FIG ITEM	PART NUMBER	NOMENCLATURE 1 2 3 4 5 6 7				UNITS PER ASSY
01						
75	NAS43HT3-22	. . SPACER				01
76	NAS43HT3-18	. . SPACER		0001	0192	02
- 76A	NAS43HT3-17	. . SPACER		0193	0538	02
77	NAS43HT3-26	. . SPACER				04
78	NAS43HT3-56	. . SPACER				02
79	NAS43HT3-16	. . SPACER				01
80	NAS43HT3-83	. . SPACER				01
81	NAS43HT3-65	. . SPACER				01
82	NAS43HT3-27	. . SPACER				02
83	NAS43HT3-124	. . SPACER		0001	0192	01
- 83A	NAS43HT3-125	. . SPACER		0193	0538	01
84	NAS43HT3-118	. . SPACER				01
85	5565237-46	. . SPACER				01
86	NAS43HT3-79	. . SPACER				01
87	NAS43HT3-170	. . SPACER				01
88	NAS43HT3-100	. . SPACER				01
- 89	5565237-33	. . PLATE ASSY-CAM LH				01
- 90	5565237-32	. . PLATE ASSY-CAM RH				01
91	5565226-5	. . . PLATE ASSY-FIXED LH SEQUENCING CAM				01
92	5565226-6	. . . PLATE ASSY-FIXED RH SEQUENCING CAM				01
93	JP33FV	. . . . BEARING-ROLLER	V60380			01
94	5565227-1	. . . CAM ASSY-LH				01
95	5565227-2	. . . CAM ASSY-RH				01
		ATTACHING PARTS				
96	NAS1149C0332R	. . . WASHER				AR
- 97		. . . DELETED-NOT USED				
98	MS16633-4018	. . . RING-RETAINING				01
		—*—				
- 98A	5565246-1	. . . . PIN-LH AND RH				02
99	5565240-2	. . SEGMENT-DETENT				02
100	5565810-22	. . PLATE-CAM PIVOT INBOARD				01
101	5565254-6	. . BUTTON				01
		ATTACHING PARTS				
102	MS24693-S27	. . SCREW				01
103	MS21042-06	. . NUT				01
		—*—				
104	6565130-1	. . SEGMENT-DETENT				01
- 105		. . DELETED-NOT USED				
106	AN3-13	. . BOLT				01
107	NAS43HT3-21	. . SPACER		0001	0486	01
- 107A	NAS43HT3-21	. . SPACER		0487	0538	02
- 107B	NAS1149F0363P	. . WASHER		0487	0538	01
108	NAS43HT3-16	. . SPACER		0001	0538	01
109	MS17825-3	. . NUT				01
110	MS24665-132	. . COTTER PIN				01
111		. . THROTTLE AND SWITCH INSTALLATION REFER TO FIGURE 02				RF

- ITEM NOT ILLUSTRATED

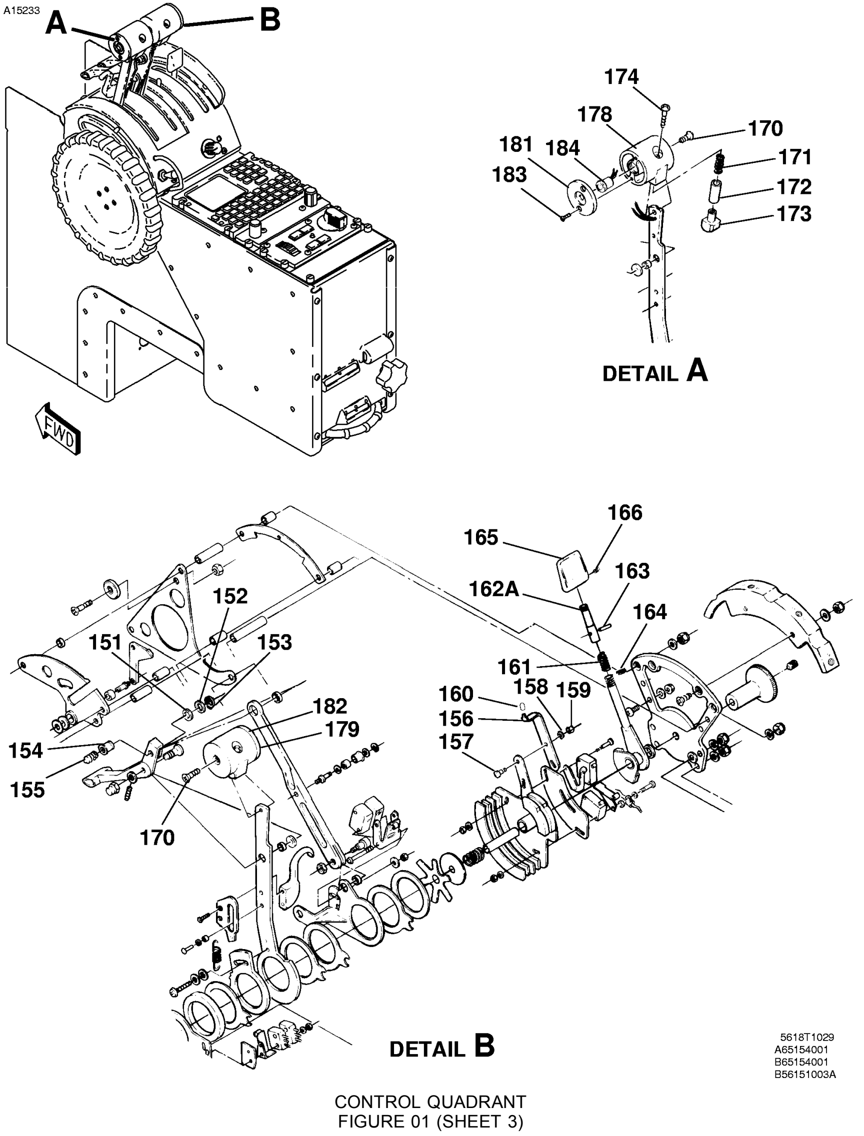

CONTROL QUADRANT
FIGURE 01 (SHEET 3)

FIG ITEM	PART NUMBER	NOMENCLATURE 1 2 3 4 5 6 7			UNITS PER ASSY
01					
- 150	5565236-4	. . PIN ASSY-LH AND RH			02
		ATTACHING PARTS			
151	NAS1149C0532R	. . WASHER			AR
152	5565237-17	. . WASHER			AR
153	MS16624-4031	. . RING-RETAINING			01
		—*—			
154	5565236-5	. . . PIN			01
155	NM54N	. . . PLUNGER-SPRING V01226			01
156	5565815-4	. . ARM ASSY-FLAP POSITION INDICATOR			01
		ATTACHING PARTS			
157	MS35206-214	. . SCREW			02
158	NAS620-4L	. . WASHER			02
159	MS21042-04	. . NUT			02
		—*—			
160	5565768-8	. . . TIP-POINTER			01
161	5565812-5	. . SPRING-FLAP CONTROL DETENT			01
- 162	5565812-6	. . STUD-THREAD	0001	0039	01
162A	5565812-7	. . STUD-THREAD-FSO 5565812-8	0040	0538	NP
- 162B	5565812-8	. . STUD-THREAD-FOR SPARES ONLY	0040	0538	01
163	MS16562-223	. . PIN			01
164	MS16624-1037	. . RETAINER			01
165	0813526-8	. . KNOB ASSY-FLAP CONTROL			01
166	AN565D6H6	. . . SETSCREW			01
- 167	5565258-1	. . KNOB DETENT ASSY-LH THROTTLE			01
- 168	5565258-2	. . KNOB DETENT ASSY-RH WITHOUT RH GO-AROUND SWITCH			01
- 169	5565258-3	. . KNOB DETENT ASSY-RH WITH RH GO-AROUND SWITCH			01
		ATTACHING PARTS			
170	MS24693-S272	. . SCREW			01
		—*—			
171	5565258-4	. . . SPRING			01
172	5565258-5	. . . BUSHING			01
173	5565258-6	. . . PLUNGER			01
174	MS21090-0628	. . . SCREW			01
- 175	5565257-1	. . . KNOB ASSY-LH USED ON 5565258-1			01
- 176	5565257-2	. . . KNOB ASSY-RH USED ON 5565258-2			01
- 177	5565257-3	. . . KNOB ASSY-RH USED ON 5565258-3			01
178	5565257-5	. . . . KNOB-LH USED ON 5565257-1			01
179	5565257-6	. . . . KNOB-RH USED ON 5565257-2			01
- 180	5565257-4	. . . . KNOB-RH USED ON 5565257-3-ALT FOR 5565257-6			01
181	5565257-7	. . . . PLATE-FACE LH AND RH USED ON 5565257-1 AND 5565257-3			01
182	5565257-8	. . . . PLATE-FACE RH USED ON 5565257-2			01
		ATTACHING PARTS			
183	MS35190-223	. . . . SCREW			02
		—*—			
184	601-4301	. . SWITCH-GO AROUND LH S313 OR SC313 AND RH S318 OR SC314 V81579			02

- ITEM NOT ILLUSTRATED

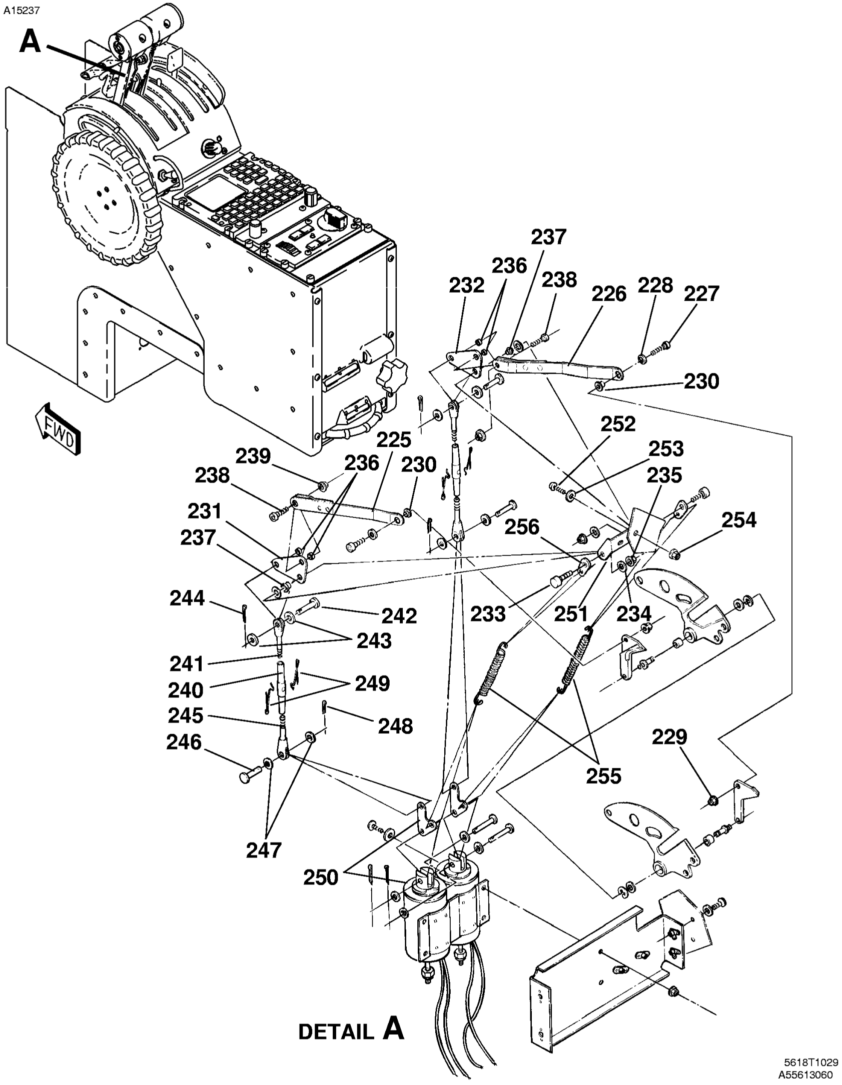

CONTROL QUADRANT
FIGURE 01 (SHEET 4)

FIG ITEM	PART NUMBER	NOMENCLATURE 1 2 3 4 5 6 7		UNITS PER ASSY	
01					
225	5565230-1	. . LINK ASSY-LH SEQUENCING CAM		01	
226	5565230-2	. . LINK ASSY-RH SEQUENCING CAM		01	
		ATTACHING PARTS			
227	4411SPCL-F3/16	. . SCREW-SHOULDER	V00141	01	
228	NAS1149FN416P	. . WASHER		01	
229	MS21042-04	. . NUT		01	
		—*—			
230	B11-1	. . . BUSHING	V00141	01	
231	5565231-1	. BELLCRANK ASSY-LH		01	
232	5565231-2	. BELLCRANK ASSY-RH		01	
		ATTACHING PARTS			
233	4412SPCL-F7/32	. SCREW-SHOULDER	V00141	01	
234	NAS1149FN316P	. WASHER-UNDER NUT		01	
235	MS21042-04	. NUT		01	
		—*—			
236	S143-3-3	. . BEARING		02	
237	S2800-74	. . BEARING-FLANGED REF SSRIF418LLEERA7P25L01P		01	
238	4417SPCL-F5/16	. SCREW-SHOULDER	V00141	02	
239	MS21042-08	. NUT		02	
240	MS21251-A2S	. TURNBUCKLE-LH AND RH		02	R
241	MS21252-2LS	. CLEVIS-UPPER LH AND RH		02	
		ATTACHING PARTS			
242	MS20392-2C13	. PIN		01	
243	NAS1149F0332P	. WASHER		02	
244	MS24665-170	. COTTER PIN		01	
		—*—			
245	MS21252-2RS	. CLEVIS-LOWER LH AND RH		02	
		ATTACHING PARTS			
246	MS20392-2C13	. PIN		01	
247	NAS1149F0332P	. WASHER		02	
248	MS24665-170	. COTTER PIN		01	
		—*—			
249	MS21256-1	. CLIP-LOCKING LH AND RH TURNBUCKLE		04	
250		. SOLENOID-THRUST REVERSER DEPLOY REFER TO 78-30-01 FIGURE 01		RF	
251	5565235-1	. BRACKET-BELLCRANK		01	
		ATTACHING PARTS			
252	MS27039-1-07	. SCREW		02	
253	NAS1149F0363P	. WASHER		02	
254	MS21042-3	. NUT		02	
		—*—			
255	5565244-1	. SPRING		02	
256	5565245-1	. CLIP-SPRING LH AND RH		02	

- ITEM NOT ILLUSTRATED

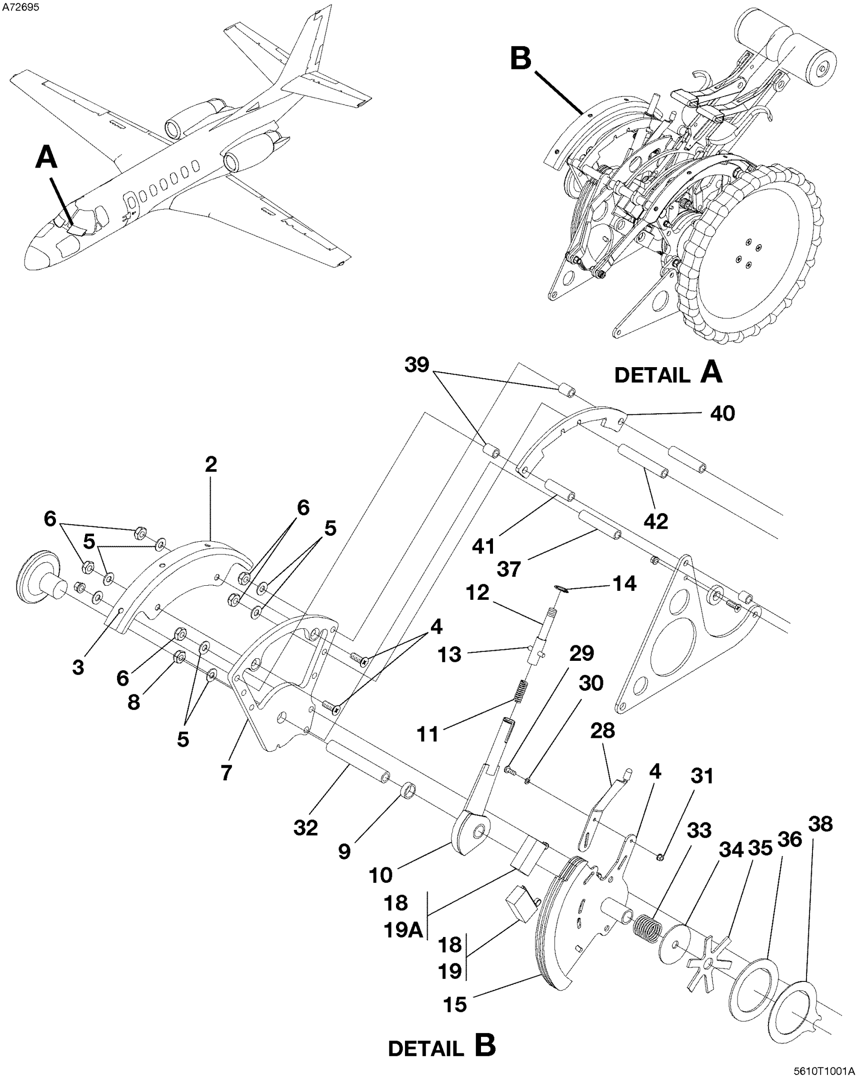

CONTROL QUADRANT ASSEMBLY - DUAL GO-AROUND SWITCHES
FIGURE 01A (SHEET 1)

FIG ITEM	PART NUMBER	NOMENCLATURE 1 2 3 4 5 6 7		UNITS PER ASSY
01A				
-		CONTROL QUADRANT ASSEMBLY - DUAL GO-AROUND SWITCHES	0260 0538	RF R
- 1	6596035-1	. QUADRANT ASSY-DUAL GO-AROUND SWITCHES		01
2	5565751-6	. . BRACKET ASSY-RH		01
3	MS21069L08K	. . . NUTPLATE		04
4	NAS517-3-1	. . SCREW		02
5	NAS1149F0332P	. . WASHER		07
6	MS21044N3	. . NUT		06
7	5565752-12	. . PLATE RH		01
8	MS21083N3	. . NUT		01
9	NAS43HT6-11	. . SPACER		01
10	5565813-14	. . SECTOR ASSY		01
11	5565812-5	. . SPRING		01
12	5565812-8	. . STUD-THREAD		01
13	MS16562-223	. . PIN		01
14	MS16624-1037	. . RING		01
15	5565237-85	. . SECTOR ASSY-FLAP FOLLOW-UP		01
- 16	TA12C59S2HA	. . . CLAMP	V84971	01
- 17	5565810-62	. . . PLATE		01
18	JV5	. . . ACTUATOR	V91929	02
19	V3-1001	. . . SWITCH S56	V91929	01
19A	V3-1001	. . . SWITCH S57	V91929	01
- 20	MS35206-220	. . . SCREW		02
- 20A	MS35206-221	. . . SCREW		02
- 21	NAS620-4L	. . . WASHER		04
- 22	5565810-61	. . . SWITCH MOUNT PLATE ASSY		02
- 23	MS21073L04K	. . . . NUTPLATE		02
- 24	5565820-5	. . . SPACER		01
- 25	6565041-10	. . . BELLCRANK ASSY		01
- 26	6565041-3	. . . . SPACER-SEGMENT		02
- 27	6565041-4	. . . . SEGMENT-BELLCRANK		02
28	5565815-6	. . ARM ASSY		01
		ATTACHING PARTS		
29	MS35206-214	. . SCREW		02
30	NAS620-4L	. . WASHER		02
31	MS21042-04	. . NUT		02
		—*—		
32	5565817-6	. . BEARING SPACER		01
33	LC049HJ05MMS	. . SPRING	V84830	01
34	0861209-1	. . WASHER		01
35	5565824-1	. . SPRING		01
36	5565804-9	. . SPACER		01
37	NAS43HT3-100	. . SPACER		01
38	0861213-1	. . FRICTION DISC		01
39	NAS43HT3-27	. . SPACER		02
40	6565130-1	. . DETENT SEGMENT		01
41	NAS43HT3-65	. . SPACER		01
42	NAS43HT3-118	. . SPACER		01

- ITEM NOT ILLUSTRATED

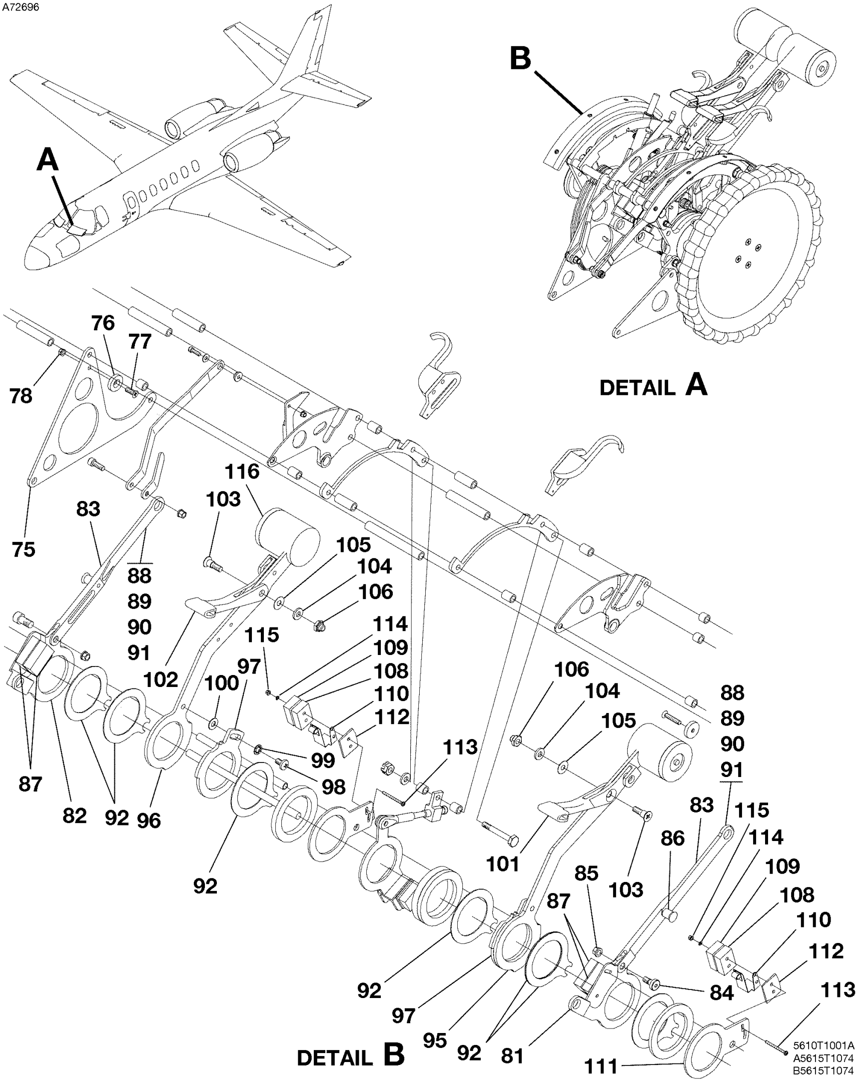

CONTROL QUADRANT ASSEMBLY - DUAL GO-AROUND SWITCHES
FIGURE 01A (SHEET 2)

FIG ITEM	PART NUMBER	NOMENCLATURE 1 2 3 4 5 6 7		UNITS PER ASSY
01A				
75	5565810-22	. . PLATE PIVOT		01
76	5565254-6	. . BUTTON		01
77	MS24693-S27	. . SCREW		01
78	MS21042-06	. . NUT		01
- 79	5565237-53	. . THROTTLE ARM SWITCH ASSY-LH		01
- 80	5565237-54	. . THROTTLE ARM SWITCH ASSY-RH		01
81	5565224-7	. . . THROTTLE ARM ASSY LH-LH		01
82	5565224-8	. . . THROTTLE ARM ASSY LH-RH		01
83	5565223-1	. . . LINK ASSY-LH AND RH		01
		ATTACHING PARTS		
84	4427SPCL-F3/8	. . . SHOULDER SCREW	V00141	01
85	MS21042-3	. . . NUT		01
		—*—		
86	5565248-1	. . . . ROLLER PIN ASSY		01
87		. . THROTTLE SWITCH REFER TO 78-30-01 FIGURE 01		RF
88	5565236-4	. . PIN ASSY		02
89	NAS1149C0532R	. . WASHER		02
90	MS16624-4031	. . RING		02
91	5565237-17	. . WASHER		02
92	0861213-1	. . FRICTION DISC		07
- 93	5565237-113	. . THROTTLE LEVER ASSY-LH		01
- 94	5565237-114	. . THROTTLE LEVER ASSY-RH		01
95	6565143-1	. . . LEVER ASSY-LH		01
96	6565143-2	. . . LEVER ASSY-RH		01
97	5565239-1	. . . CAM		01
		ATTACHING PARTS		
98	MS21090-348	. . . SCREW		01
99	MS35333-73	. . . WASHER		01
100	NAS1149C0332R	. . . WASHER		01
		—*—		
101	5565222-3	. . . LEVER-LH FSO 6665010-1 REFER TO NOTE 1		NP
- 101A	6665010-1	. . . LEVER - LH SPARES ONLY		01
102	5565222-4	. . . LEVER-RH FSO 6665010-2 REFER TO NOTE 1		NP
- 102A	6665010-2	. . . LEVER - RH SPARES ONLY		01
		ATTACHING PARTS		
103	5565242-1	. . . SHOULDER SCREW		01
104	NAS1149C0363R	. . . WASHER		01
105	5565237-16	. . . WASHER		AR
106	S1914-8	. . . NUT		01
		—*—		
- 107	5565810-4	. . SPACER SWITCH ASSY		02
108	1SE3-3	. . . SWITCH-LH S61	V91929	02
109	1SE3-3	. . . SWITCH-RH S62	V91929	02
110	JE61	. . . ACTUATOR	V91929	01
111	5565807-5	. . . SPACER MOUNT		01
112	5565820-2	. . . SPACER		01
113	NAS1635-02-16	. . . SCREW		02
114	NAS620-2	. . . WASHER		02
115	MS21042-02	. . . NUT		02
116		. . DETENT ASSY KNOB REFER TO 76-10-01 FIGURE 01		RF

NOTE 1—WHEN REPLACING 5565222-3 OR 5565222-4, MUST REPLACE BOTHE AT THE SAME TIME WITH 6665010-1 AND 6665010-2.

- ITEM NOT ILLUSTRATED

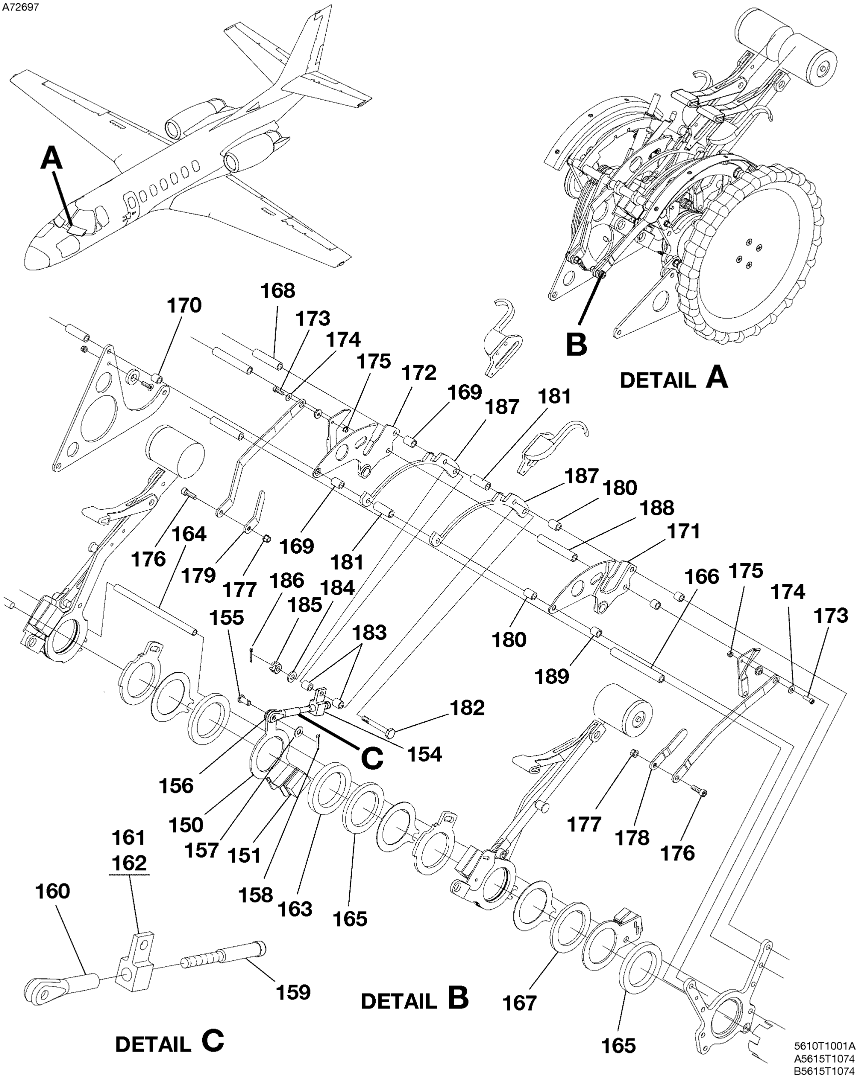

CONTROL QUADRANT ASSEMBLY - DUAL GO-AROUND SWITCHES
FIGURE 01A (SHEET 3)

FIG ITEM	PART NUMBER	NOMENCLATURE 1 2 3 4 5 6 7	UNITS PER ASSY
01A			
150	5565237-47	. . GEAR WARNING SWITCH ASSY	01
151		. . . THROTTLE SWITCH REFER TO 32-60-00 FIGURE 01	RF
- 152	5565241-5	. . . GEAR WARNING ADJUST ASSY	01
- 153	5565238-5	. . . . SPACER ASSY	01
154	5565241-2	. . . . ADJUST SCREW ASSY	01
		ATTACHING PARTS	
155	5565806-4	. . . . PIN-CLEVIS	01
156	NAS1149F0363P	. . . . WASHER	01
157	NAS1149F0332P	. . . . WASHER	01
158	MS24665-208	. . . . COTTER PIN	01
		—*—	
159	5015056-2	. . . . . SCREW	01
160	AN665-21L	. . . . . TERMINAL	01
161	5565241-3	. . . . . LUG ASSY	01
162	MS21209F4-20	. . . . . . INSERT	01
163	5565804-12	. . SPACER	01
164	6561176-30	. . SPACER	01
165	5565804-11	. . SPACER	02
166	NAS43HT3-170	. . SPACER	01
167	5565804-4	. . SPACER	01
168	NAS43HT3-83	. . SPACER	01
169	NAS43HT3-30	. . SPACER	02
170	NAS43HT3-16	. . SPACER	01
171	6665004-11	. . CAM PLATE ASSY	01
172	6665004-12	. . CAM PLATE ASSY	01
173	4411SPCL-F3/16	. . SHOULDER SCREW	02
174	NAS1149FN416P	. . WASHER	02
175	MS21042-04	. . NUT	02
176	4417SPCL-F5/16	. . SHOULDER SCREW	02
177	MS21042-08	. . NUT	02
178	5565230-1	. . LINK ASSY-LH	01
179	5565230-2	. . LINK ASSY-RH	01
180	NAS43HT3-27	. . SPACER	02
181	NAS43HT3-52	. . SPACER	02
182	AN3-13	. . BOLT	01
183	NAS43HT3-21	. . SPACER	02
184	NAS1149F0363P	. . WASHER	01
185	MS17825-3	. . NUT	01
186	MS24665-132	. . COTTER PIN	01
187	5565240-2	. . DETENT SEGMENT	02
188	NAS43HT3-125	. . SPACER	01
189	NAS43HT3-21	. . SPACER	01

- ITEM NOT ILLUSTRATED

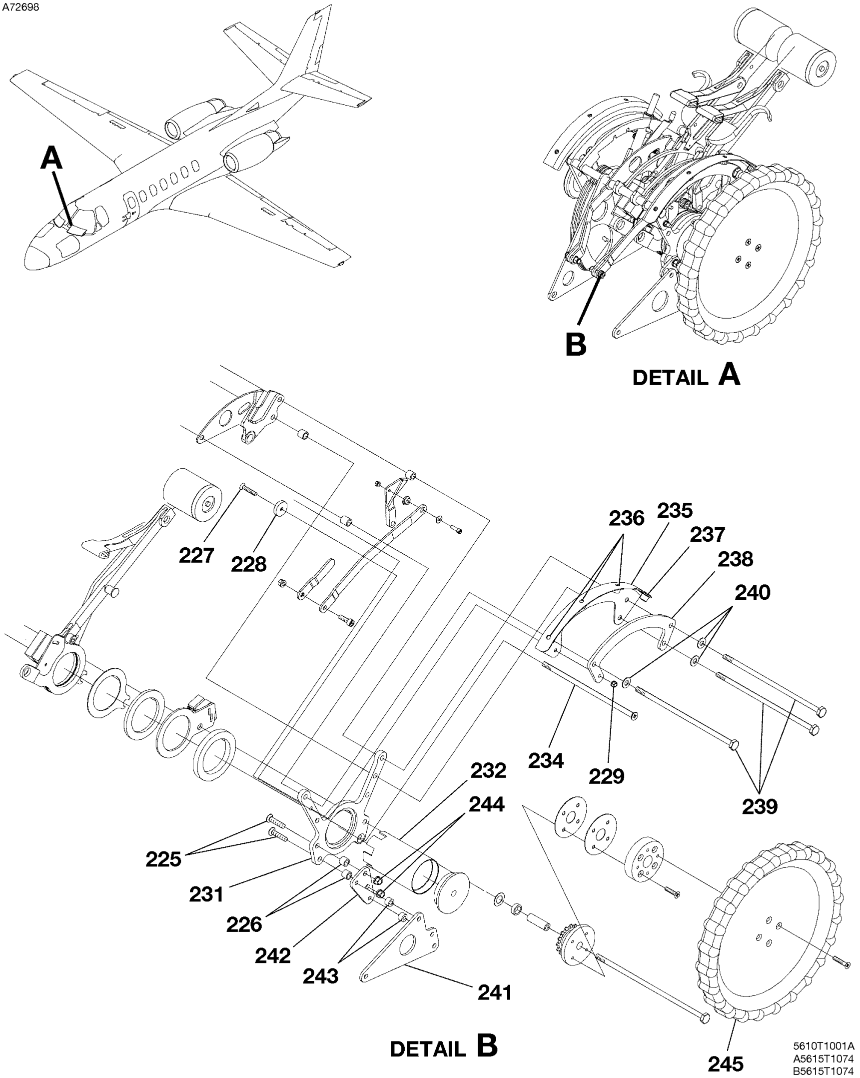

CONTROL QUADRANT ASSEMBLY - DUAL GO-AROUND SWITCHES
FIGURE 01A (SHEET 4)

FIG ITEM	PART NUMBER	NOMENCLATURE 1 2 3 4 5 6 7	UNITS PER ASSY
01A			
225	MS24694-S54	. . SCREW	02
226	NAS43HT3-16	. . SPACER	02
227	MS24693-S29	. . SCREW	01
228	5565254-6	. . BUTTON	01
229	MS21042-06	. . NUT	01
- 230	6596035-2	. . HUB/MOUNTING PLATE ASSY	01
231	5565254-3	. . . MOUNTING PLATE	01
232	5565805-12	. . . HUB ASSY	01
- 233	MS24693-S23	. . . SCREW	01
234	NAS333CP50	. . BOLT	01
235	5565254-5	. . BRACKET ASSY	01
236	MS21069L08K	. . . NUTPLATE	03
237	MS21071L08K	. . . NUTPLATE	01
238	5565254-2	. . PLATE	01
239	AN3-52A	. . BOLT	03
240	NAS1149C0332R	. . WASHER	03
241	5565249-2	. . PLATE-CAM PIVOT	01
242	5565249-3	. . PLATE	01
243	NAS43HT3-12	. . SPACER	02
244	MS21042-3	. . NUT	02
245		. . WHEEL ASSY REFER TO 76-10-01 FIGURE 01	RF

- ITEM NOT ILLUSTRATED

A15240

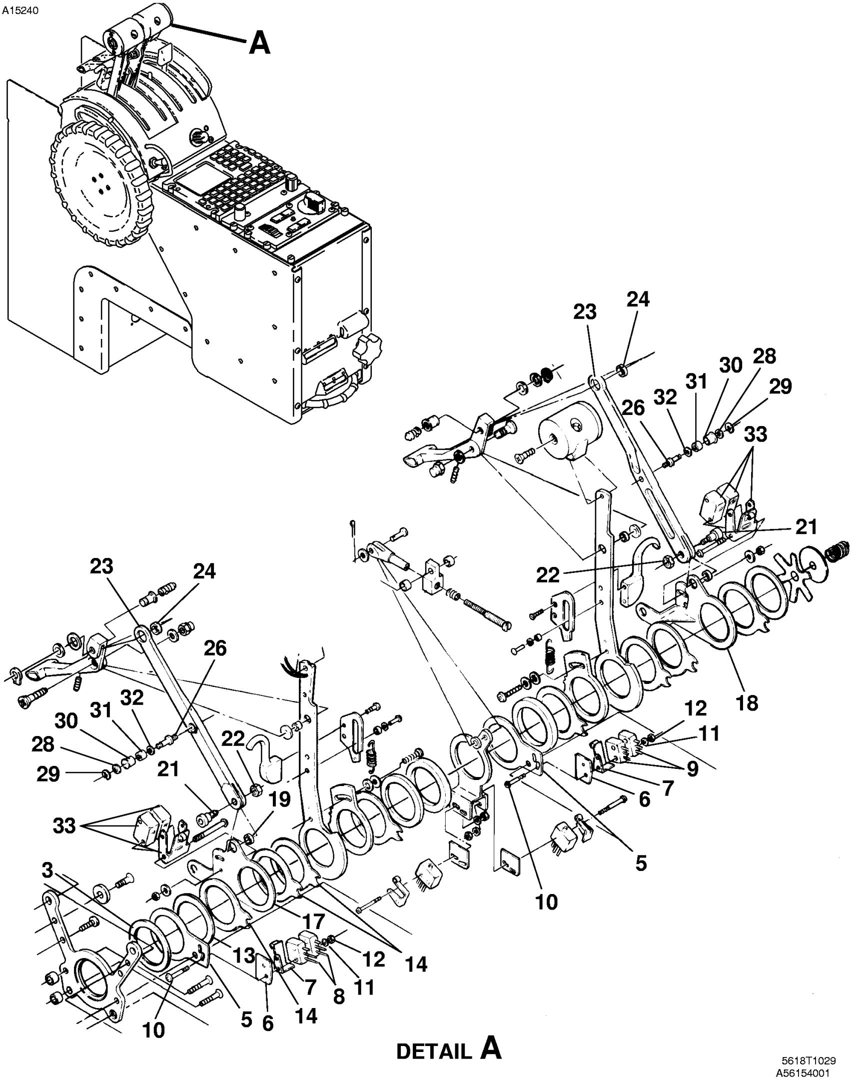

DETAIL A

5618T1029
A56154001

CONTROL QUADRANT - SWITCHES AND LEVERS
FIGURE 02 (SHEET 1)

FIG ITEM	PART NUMBER	NOMENCLATURE 1 2 3 4 5 6 7				UNITS PER ASSY
02						
-		CONTROL QUADRANT - SWITCHES AND LEVERS		0001	0538	RF
- 1		. QUADRANT ASSY WITHOUT RH GO AROUND SWITCH REFER TO FIGURE 01				RF
- 2		. QUADRANT ASSY WITH RH GO AROUND SWITCH REFER TO FIGURE 01				RF
3	5565804-11	. . SPACER				01
- 4	5565810-4	. . SPACER SWITCH ASSY-LH AND RH				02
5	5565807-5	. . . MOUNT				02
6	5565820-2	. . . SPACER-PHENOLIC				02
7	JE61	. . . ACTUATOR-SWITCH	V91929			02
8	1SE3-3	. . . SWITCH-LH FUEL CUTOFF S61	V91929			01
9	1SE3-3	. . . SWITCH-RH FUEL CUTOFF S62	V91929			01
		ATTACHING PARTS				
10	NAS1635-02-16	. . . SCREW				02
11	NAS620-2	. . . WASHER				02
12	MS21042-02	. . . NUT				02
		—*—				
13	5565804-4	. . SPACER				01
14	0861213-1	. . FRICTION DISC				03
- 15	5565237-53	. . THROTTLE ARM SWITCH ASSY-LH				01
- 16	5565237-54	. . THROTTLE ARM SWITCH ASSY-RH				01
17	5565224-7	. . . THROTTLE ARM ASSY-LH				01
18	5565224-8	. . . THROTTLE ARM ASSY-RH				01
19	S1003-89A	. . . . BEARING				01
- 20	5565223-1	. . . LINK ASSY				01
		ATTACHING PARTS				
21	4427SPCL-F3/8	. . . SHOULDER SCREW	V00141			01
22	MS21042-3	. . . NUT				01
		—*—				
23	5565223-2	. . . . LINK				01
24	S1003-90A	. . . . BEARING				01
- 25	5565248-1	. . . . PIN ASSY-ROLLER				01
26	5565248-2	. . . . . PIN				01
- 27	5565248-4	. . . . . ROLLER ASSY				01
		ATTACHING PARTS				
28	NAS1149CN416R	. . . . . WASHER				01
29	MS16633-4012	. . . . . RING-RETAINING				01
		—*—				
30	5565248-3	. . . . . . SLEEVE				01
31	S1997-2G4	. . . . . . BEARING				01
32	NAS1149CN416R	. . . . . WASHER				AR
33		. . . SWITCHES AND ACTUATOR REFER TO 78-30-01 FIGURE 01				RF
- 34		. . . BRACKET ASSY-WIRE BUNDLE REFER TO 78-30-01 FIGURE 01				RF

- ITEM NOT ILLUSTRATED

A15243

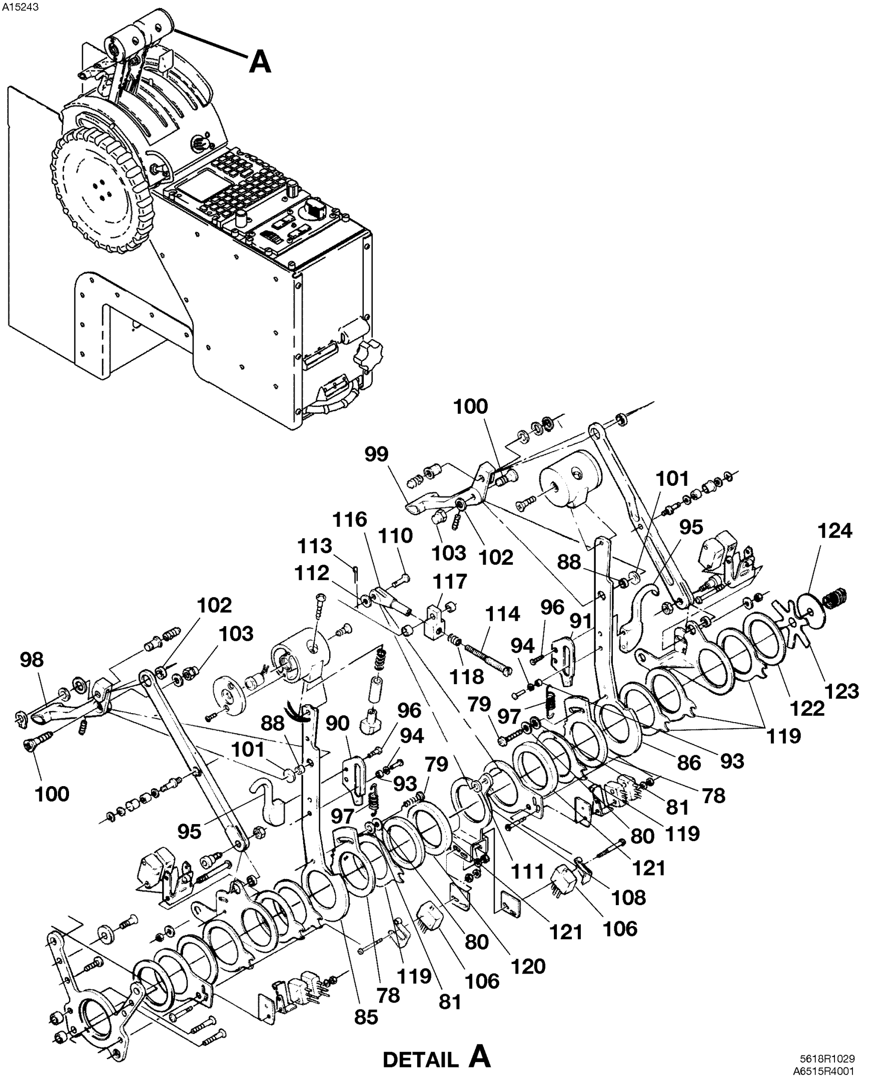

5618R1029
A6515R4001

CONTROL QUADRANT - SWITCHES AND LEVERS
FIGURE 02 (SHEET 2)

FIG ITEM	PART NUMBER	NOMENCLATURE 1 2 3 4 5 6 7			UNITS PER ASSY
02					
- 75	5565237-5	. . THROTTLE LEVER ASSY-LH FSO 5565237-113			NP
- 75A	5565237-113	. . THROTTLE LEVER ASSY-LH			01
- 76	5565237-6	. . THROTTLE LEVER ASSY-RH WITHOUT RH GO AROUND SWITCH	0001	0086	01
- 77	5565237-29	. . THROTTLE LEVER ASSY-RH WITH RH GO AROUND SWITCH	0001	0086	01
- 77A	5565237-77	. . THROTTLE LEVER ASSY-RH WITH OR WITHOUT RH GO AROUND SWITCH FSO 5565237-114	0087	0538	NP
- 77B	5565237-114	. . THROTTLE LEVER ASSY-RH WITH OR WITHOUT RH GO AROUND SWITCH	0087	0538	01
78	5565239-1	. . . CAM			01
		ATTACHING PARTS			
79	MS21090-348	. . . SCREW-LOCKING			01
80	NAS1149C0332R	. . . WASHER			01
81	MS35333-73	. . . WASHER-LOCK			01
		—*—			
- 82	5565221-19	. . . LEVER ASSY-LH			01
- 83	5565221-12	. . . LEVER ASSY-RH USED ON 5565237-6	0001	0086	01
- 84	5565221-21	. . . LEVER ASSY-RH USED ON 5565237-29 & -77			01
85	5565221-18	. . . . LEVER-LH			01
86	5565221-14	. . . . LEVER-RH USED ON 5565221-12	0001	0086	01
- 87	5565221-20	. . . . LEVER-RH USED ON 5565221-21			01
88	S1003-89A	. . . . BEARING			01
- 89	5565221-17	. . . . TUBE			02
90	5565225-11	. . . . LOCK ASSY-LH THROTTLE			01
91	5565225-12	. . . . LOCK ASSY-RH THROTTLE			01
- 92		. . . . DELETED-NOT USED			R
		ATTACHING PARTS			
93	5565803-11	. . . . SLEEVE			02
94	NAS1149CN432R	. . . . WASHER			02
		—*—			
95	5565225-13	. . . . . HANDLE			01
		ATTACHING PARTS			
96	NAS1189-06P5WL	. . . . . SCREW			02
		—*—			
97	5565803-15	. . . . SPRING			01
98	5565222-3	. . . LEVER-LH FSO 6665010-1 REFER TO NOTE 1			NP
- 98A	6665010-1	. . . LEVER - LH SPARES ONLY			01
99	5565222-4	. . . LEVER-RH FSO 6665010-2 REFER TO NOTE 1			NP
- 99A	6665010-2	. . . LEVER - RH SPARES ONLY			01
		ATTACHING PARTS			
100	5565242-1	. . . SHOULDER SCREW			01
101	5565237-16	. . . WASHER			AR
102	NAS1149C0363R	. . . WASHER			01
103	S1914-7	. . . NUT-CAP			01
		—*—			
- 104	NAS1081C3A8L	. . . SETSCREW			01
- 105	5565237-47	. . SWITCH ASSY-GEAR WARNING			01
106		. . . SWITCH REFER TO 32-60-00 FIGURE 01			RF
- 107	5565241-5	. . . ADJUSTING ASSY-GEAR WARNING			01
108	5565238-5	. . . . SPACER ASSY-WELDED			01
- 109	5565241-2	. . . . SCREW ASSY-ADJUSTING			01
		ATTACHING PARTS			
110	5565806-4	. . . . PIN-CLEVIS			01
111	NAS1149F0363P	. . . . WASHER			01
112	NAS1149F0332P	. . . . WASHER			01
113	MS24665-208	. . . . COTTER PIN			01
		—*—			
114	5015056-2	. . . . . SCREW			01
- 115	5015056-8	. . . . . SCREW ALTERNATE FOR 5015056-2			01
116	AN665-21L	. . . . . TERMINAL			01
117	5565241-3	. . . . . LUG ASSY			01
118	MS21209F4-20	. . . . . . INSERT-THREAD			01
119	0861213-1	. . FRICTION DISC			05
120	5565804-11	. . SPACER			01
121	5565804-12	. . SPACER			02
122	5565804-9	. . SPACER			01
123	5565824-1	. . SPRING			01
124	0861209-1	. . WASHER			01

NOTE 1—WHEN REPLACING 5565222-3 OR 5565222-4, MUST REPLACE BOTHE AT THE SAME TIME WITH 6665010-1 AND 6665010-2.

- ITEM NOT ILLUSTRATED

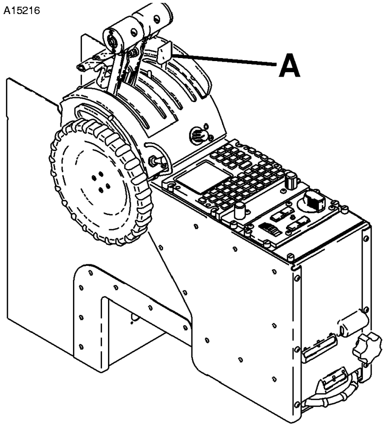

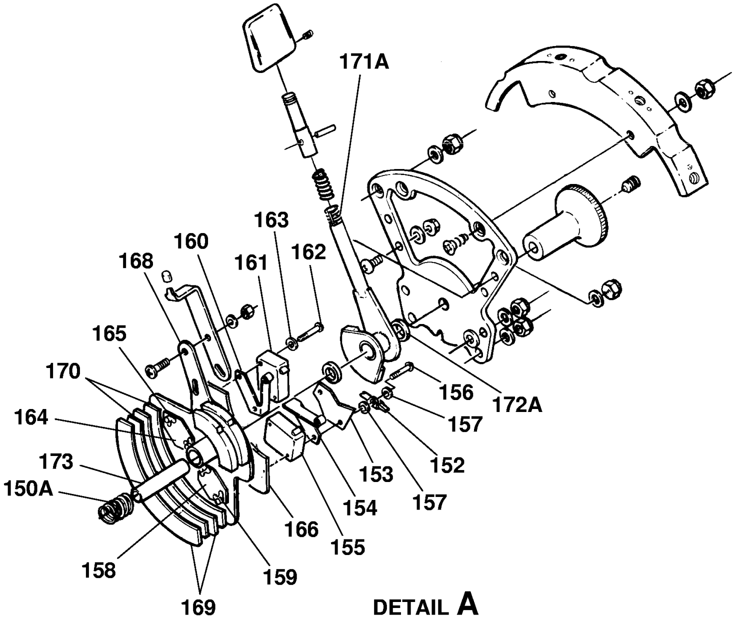

DETAIL A

CONTROL QUADRANT - SWITCHES AND LEVERS
FIGURE 02 (SHEET 3)

FIG ITEM	PART NUMBER	NOMENCLATURE 1 2 3 4 5 6 7				UNITS PER ASSY
02						
- 150	5565810-5	. . SPRING		0001	0039	01
150A	LC049HJ5	. . SPRING	V84830	0040	0538	01
- 151	5565237-68	. . ACTUATOR ASSY-FLAP PRESELECT		0001	0039	01
- 151A	5565237-74	. . ACTUATOR ASSY-FLAP PRESELECT		0040	0192	01
- 151B	5565237-85	. . ACTUATOR ASSY-FLAP PRESELECT		0193	0538	01
152	TA12C59SC02HA	. . . CLAMP-WIRE BUNDLE	V84971			01
153	5565810-62	. . . PLATE				01
154	JV5	. . . ACTUATOR-SWITCH	V91929			01
155	V3-1001	. . . SWITCH-FLAPS UP S56	V91929			01
		ATTACHING PARTS				
156	MS35206-221	. . . SCREW				02
157	NAS620-4L	. . . WASHER				03
158	5565810-61	. . . PLATE ASSY				01
159	MS21073L04K	. . . . NUTPLATE				02
		—*—				
160	JV5	. . . ACTUATOR-SWITCH	V91929			01
161	V3-1001	. . . SWITCH-FLAPS DOWN S57	V91929			01
		ATTACHING PARTS				
162	MS35206-220	. . . SCREW				02
163	NAS620-4L	. . . WASHER				02
164	5565810-61	. . . PLATE ASSY				01
165	MS21073L04K	. . . . NUTPLATE				02
		—*—				
166	5565820-5	. . . SPACER-PHENOLIC				01
- 167	6565041-6	. . . BELLCRANK ASSY		0001	0039	01
168	6565041-10	. . . BELLCRANK ASSY		0040	0538	01
169	6565041-3	. . . . SPACER-SEGMENT				02
170	6565041-4	. . . . SEGMENT-BELLCRANK				02
- 171	5565813-1	. . SECTOR ASSY-FLAP PRESELECT WEU 5565813-14		0001	0039	01
171A	5565813-14	. . SECTOR ASSY-FLAP PRESELECT		0040	0538	01
- 172	NAS43HT6-6	. . SPACER		0001	0039	01
172A	NAS43HT6-11	. . SPACER		0040	0538	01
173	5565817-6	. . SPACER-BEARING				01

- ITEM NOT ILLUSTRATED

A10131

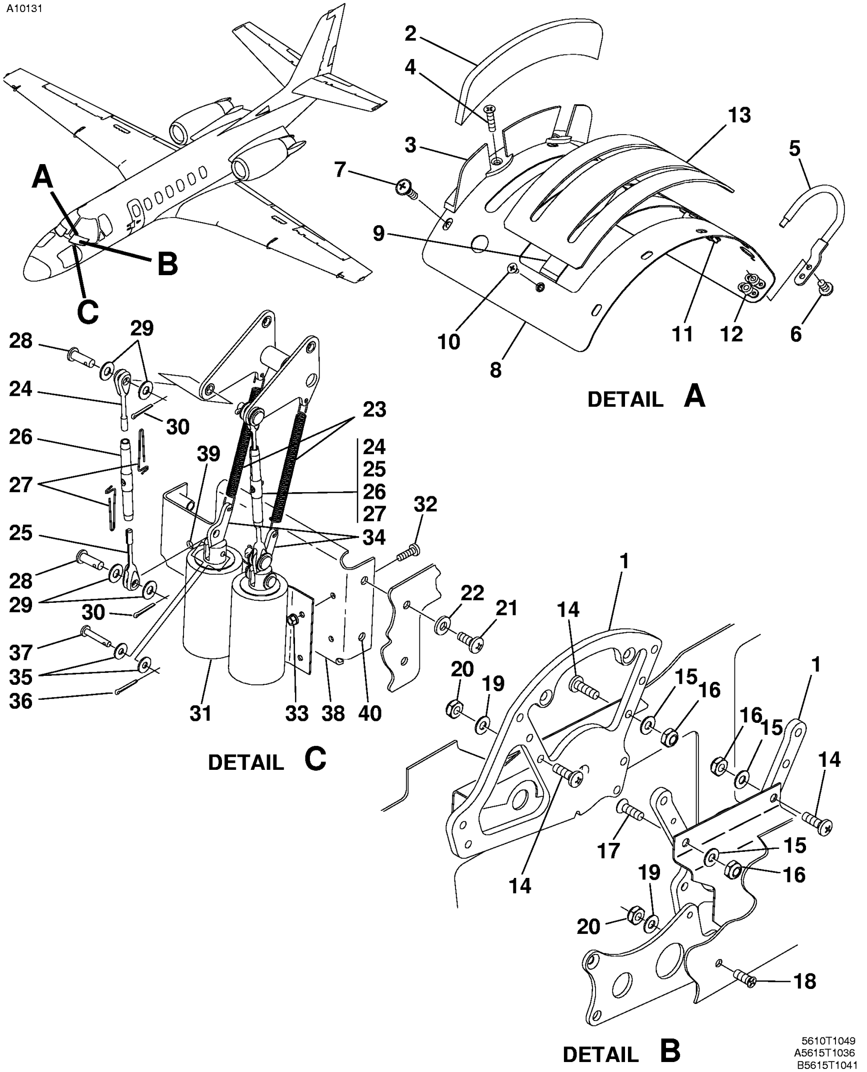

5610T1049
A5615T1036
B5615T1041
C5615T1035

CONTROL QUADRANT
FIGURE 03 (SHEET 1)

FIG ITEM	PART NUMBER	NOMENCLATURE 1 2 3 4 5 6 7				UNITS PER ASSY	
03							
-		CONTROL QUADRANT		0539	& ON	RF	
1		. CONTROL QUADRANT ASSY REFER TO 76-10-01 FIGURE 04				RF	
2	5565700-9	. COVER GUARD				01	
3	6565700-34	. GUARD FSO 6565700-50		0539	0571	NP	
- 3A	6565700-50	. GUARD		0572	& ON	01	
		ATTACHING PARTS					
4	MS24694-S8	. SCREW				02	
		—*—					
5	6561176-24	. GUARD ASSY FSO 6561176-37		0539	0641	NP	
- 5A	6561176-31	. GUARD ASSY FSO 6561176-37		0042	0690	NP	
- 5B	6561176-34	. GUARD ASSY FSO 6561176-37		0691	0759	NP	
- 5C	6561176-37	. GUARD ASSY		0760	& ON	01	
		ATTACHING PARTS					
6	MS35207-227	. SCREW		0539	0641	02	
- 6A	MS35206-228	. SCREW		0642	& ON	01	
		—*—					
7	CM3558-8-10G	. SCREW				02	
8	6561176-19	. QUADRANT COVER ASSY		0539	0750	01	
- 8A	6561176-40	. QUADRANT COVER ASSY		0751	& ON	01	
9	6561176-22	. . STRAP ASSY				01	
		ATTACHING PARTS					
10	MS24693-BB24	. . SCREW		0539	0750	02	R
- 10A	MS24693-BB24	. . SCREW		0751	& ON	02	
		—*—					
11	MS21075L04N	. . NUTPLATE				02	
12	MS21069L06K	. . NUTPLATE				02	
13	6561176-28	. SLOT COVER				01	
14	MS27039-1-09	. SCREW				03	
15	NAS1149F0332P	. WASHER				04	
16	MS21044N3	. NUT				04	
17	MS24694-S51	. SCREW				01	
18	NAS1581F3R2	. BOLT				01	
19	NAS1149F0332P	. WASHER				02	
20	MS21083N3	. NUT				02	
21	MS27039-1-07	. SCREW				04	
22	NAS1149F0363P	. WASHER				04	
23	5565244-1	. SPRING				02	
24	MS21252-2LS	. CLEVIS END TURNBUCKLE				02	
25	MS21252-2RS	. CLEVIS END TURNBUCKLE				02	
26	MS21251-A2S	. BARREL				02	R
27	MS21256-1	. CLIP				04	
28	MS20392-2C13	. PIN				04	
29	NAS1149F0332P	. WASHER				08	
30	MS24665-170	. COTTER PIN				04	
31	183238-001	. SOLENOID	V81840			01	
		ATTACHING PARTS					
32	MS35206-229	. SCREW				04	
33	MS21042-06	. NUT				04	
		—*—					
34	5565245-2	. CLIP-SPRING				02	
35	NAS1149FN632P	. WASHER				04	
36	MS24665-170	. COTTER PIN				02	
37	MS20392-1C19	. PIN				02	
38	5565233-3	. BRACKET ASSY-SOLENOID MOUNTING				01	
39	MS21047L3	. . NUTPLATE				02	
40	MS21073L3	. . NUTPLATE				02	

- ITEM NOT ILLUSTRATED

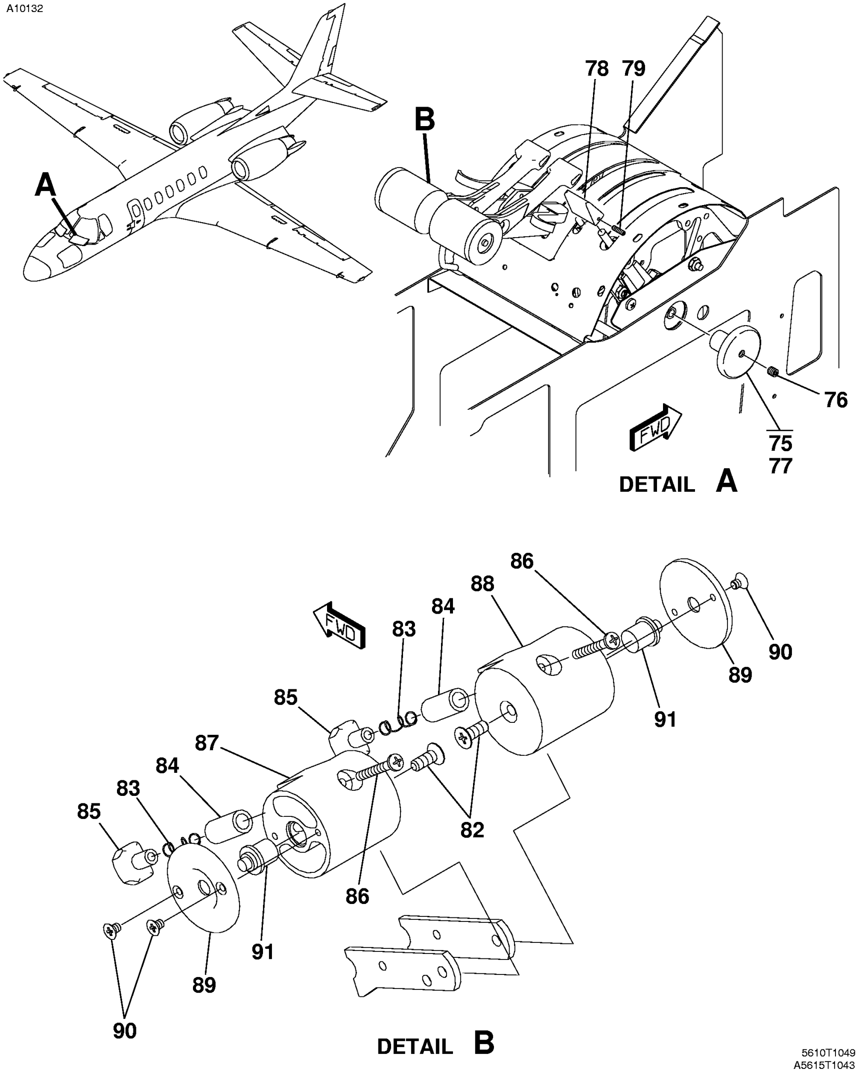

CONTROL QUADRANT
FIGURE 03 (SHEET 2)

FIG ITEM	PART NUMBER	NOMENCLATURE 1 2 3 4 5 6 7		UNITS PER ASSY
03				
75	5565256-4	. KNOB ASSY-FRICTION ADJUST		01
76	AN565A428H4	. . SETSCREW		01
77	5015051-3	. . SILKSCREEN		01
78	0813526-8	. KNOB ASSY-FLAP CONTROL		01
79	AN565D6H6	. . SETSCREW		02
- 80	5565258-1	. KNOB DETENT ASSY-LH THROTTLE		01
- 81	5565258-3	. KNOB DETENT ASSY-RH THROTTLE		01
		ATTACHING PARTS		
82	MS24693-S272	. SCREW		01
		—*—		
83	5565258-4	. . SPRING		01
84	5565258-5	. . BUSHING		01
85	5565258-6	. . PLUNGER		01
86	MS21090-0628	. . SCREW		01
87	5565257-1	. . KNOB ASSY-LH THROTTLE		01
88	5565257-3	. . KNOB ASSY-RH THROTTLE		01
89	5565257-7	. . . FACE PLATE		01
		ATTACHING PARTS		
90	MS35190-223	. . . SCREW		02
		—*—		
91	601-4301	. SWITCH-GO AROUND	V81579	02

- ITEM NOT ILLUSTRATED

A10166

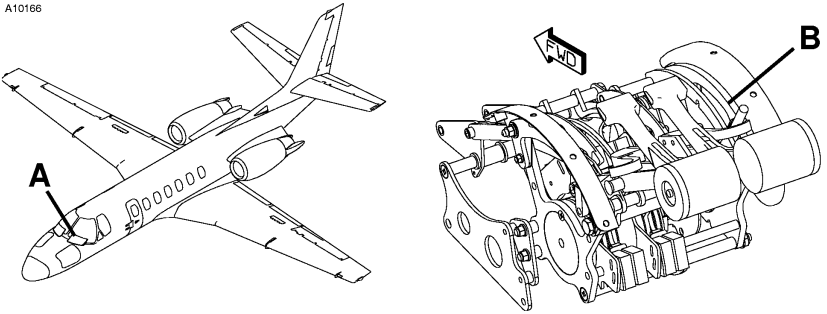

DETAIL A

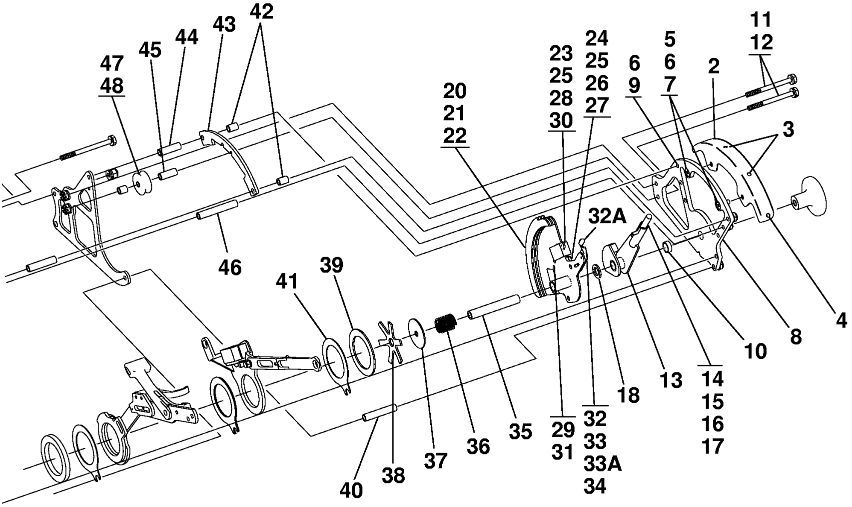

DETAIL B

5610T1049
A5615T1045
B5615T1044

CONTROL QUADRANT ASSEMBLY
FIGURE 04 (SHEET 1)

FIG ITEM	PART NUMBER	NOMENCLATURE 1 2 3 4 5 6 7				UNITS PER ASSY
04						
-		CONTROL QUADRANT ASSEMBLY		0539	0750	RF
- 1	6561175-1	. CONTROL QUADRANT ASSY-FSO 6561175-3		0539	0543	NP
- 1A	6561175-2	. CONTROL QUADRANT ASSY-FSO 6561175-3		0544	0585	NP
- 1B	6561175-3	. CONTROL QUADRANT ASSY-FSO 6561175-200		0586	0589	NP R
- 1C	6561175-200	. CONTROL QUADRANT ASSY-FOR SPARES ONLY		0586	0589	01 R
- 1D	6561175-4	. CONTROL QUADRANT ASSY		0590	0622	01
- 1E	6561175-5	. CONTROL QUADRANT ASSY		0623	0624	01
- 1F	6561175-6	. CONTROL QUADRANT ASSY-FSO 6561175-8		0625	0626	NP
- 1G	6561175-7	. CONTROL QUADRANT ASSY-FSO 6561175-8		0627	0631	NP
- 1H	6561175-8	. CONTROL QUADRANT ASSY-FSO 6561175-201		0632	0750	NP R
- 1J	6561175-201	. CONTROL QUADRANT ASSY-FOR SPARES ONLY		0632	0750	01 R
2	6561176-16	. . BRACKET ASSY-CONTROL QUADRANT RH				01
3	MS21069L08K	. . . NUTPLATE				03
4	MS21071L08K	. . . NUTPLATE				01
5	MS24694-S50	. . SCREW				02
6	NAS1149F0332P	. . WASHER				AR
7	MS21083N3	. . NUT				AR
8	6561176-1	. . PLATE-OUTBOARD RH MOUNTING				01
9	MS21042-3	. . NUT				02
10	NAS43DD6-11FC	. . SPACER				01
11	AN3-22	. . BOLT				02
12	NAS1149F0363P	. . WASHER				02
13	5565813-14	. . SECTOR ASSY-CONTROL QUADRANT		0539	0626	01
- 13A	5565813-34	. . SECTOR ASSY		0627	0750	01
14	5565812-5	. . SPRING				01
15	5565812-7	. . STUD-THREAD-FSO 5565812-8		0040	0787	NP
- 15A	5565812-8	. . STUD-THREAD		0788	& ON	01
16	MS16562-223	. . PIN				01
17	MS16624-1037	. . RING				01
18	NAS1149F0663P	. . WASHER				01
- 19	6665002-1	. . SECTOR ASSY-FLAP FOLLOW-UP				01
20	6665002-2	. . . BELLCRANK ASSY				01
21	5565820-5	. . . SPACER				01
22	5565810-61	. . . PLATE ASSY-SWITCH MOUNT				02
23	V3-1001	. . . SWITCH-FLAPS DOWN SC011	V91929			01
24	V3-1001	. . . SWITCH-FLAPS UP SC012	V91929			01
25	S1913-1	. . . ACTUATOR-SWITCH				02
26	5565810-62	. . . PLATE-SWITCH				01
27	TA12C59SC02HA	. . . CLAMP	V84971			01
28	MS35206-220	. . . SCREW				02
29	MS35206-221	. . . SCREW				02
30	NAS620-4L	. . . WASHER				03
31	NAS1149FN416P	. . . WASHER				01
32	5565815-6	. . ARM ASSY				01
32A	5565768-8	. . . TIP-POINTER				01
33	MS35206-214	. . SCREW				02
33A	NAS620-4L	. . WASHER				02
34	MS21042-04	. . NUT				02
35	5565817-6	. . BEARING SPACER-FLAP PRE-SELECT				01
36	LC049HJ5	. . COMPRESSION SPRING	V84830			01
37	0861209-1	. . WASHER				01
38	5565824-1	. . SPRING				01
39	5565804-9	. . SPACER				01
40	NAS43DD3-100FC	. . SPACER				01
41	0861213-1	. . FRICTION DISC				01
42	NAS43DD3-27FC	. . SPACER				02
43	6565130-1	. . DETENT SEGMENT				01
44	NAS43DD3-65FC	. . SPACER				01
45	NAS43DD3-122FC	. . SPACER				01
46	NAS43DD3-50FC	. . SPACER				01
47	S394	. . PULLEY				01
48	0411783-0	. . BUSHING				01

- ITEM NOT ILLUSTRATED

A10167

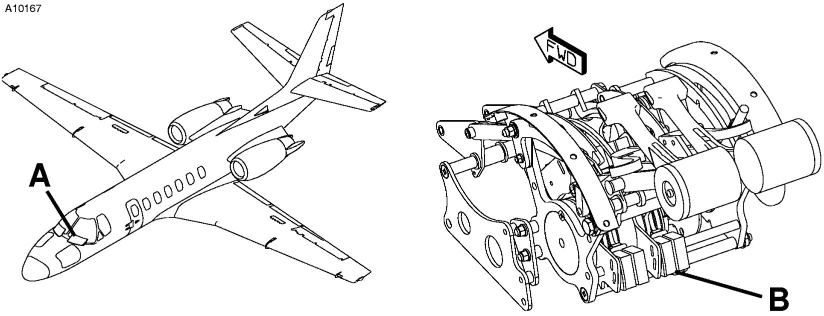

DETAIL A

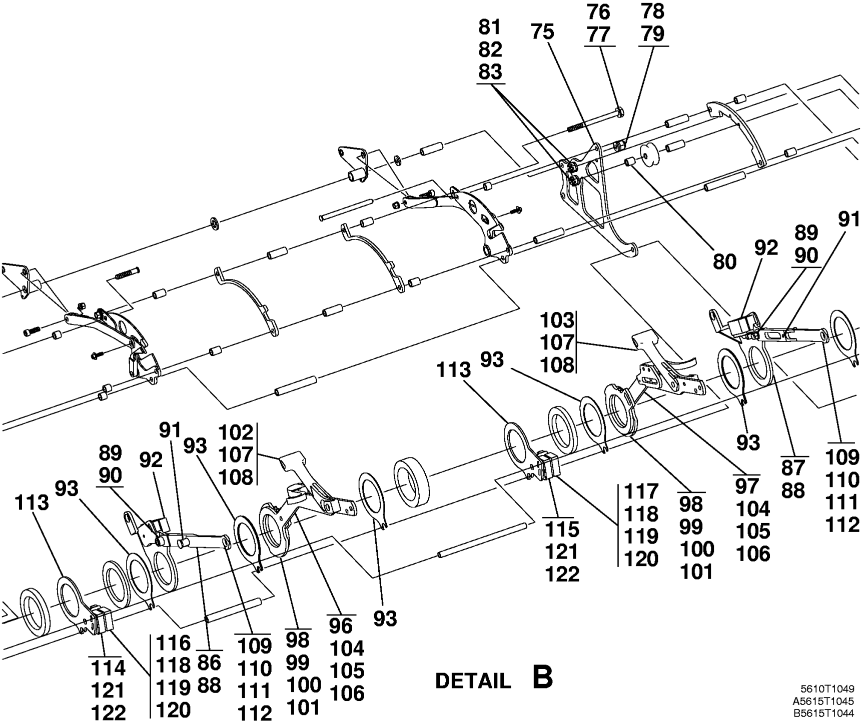

DETAIL B

5610T1049
A5615T1045
B5615T1044

CONTROL QUADRANT ASSEMBLY
FIGURE 04 (SHEET 2)

FIG ITEM	PART NUMBER	NOMENCLATURE 1 2 3 4 5 6 7				UNITS PER ASSY
04						
75	6561176-29	. . CENTER MOUNTING PLATE				01
76	AN3-24A	. . BOLT				01
77	NAS1149F0332P	. . WASHER				AR
78	MS21044N3	. . NUT				01
79	NAS1149F0363P	. . WASHER				AR
80	NAS43DD3-22FC	. . SPACER				01
81	MS17826-3	. . NUT				02
82	NAS1149F0363P	. . WASHER				02
83	MS24665-132	. . COTTER PIN				02
- 84	5565237-53	. . THROTTLE ARM SWITCH ASSY-LH		0539	0585	01
- 84A	5565237-111	. . THROTTLE ARM SWITCH ASSY-LH		0586	0750	01
- 85	5565237-54	. . THROTTLE ARM SWITCH ASSY-RH		0539	0585	01
- 85A	5565237-112	. . THROTTLE ARM SWITHC ASSY-RH		0586	0750	01
86	5565224-7	. . . ARM ASSY-THROTTLE LH				01
87	5565224-8	. . . ARM ASSY-THROTTLE RH				01
88	5565223-1	. . . LINK ASSY				01
		ATTACHING PARTS				
89	4427SPCL-F3/8	. . . SHOULDER SCREW	V00141			01
90	MS21042-3	. . . NUT				01
		—*—				
91	5565248-1	. . . ROLLER PIN ASSY				01
92		. . . SWITCH-THROTTLE REFER TO 78-30-01 FIGURE 01				RF
93	0861213-1	. . FRICTION DISC				AR
- 94	6561177-1	. . THROTTLE LEVER ASSY-LH		0539	0622	01
- 94A	6561177-3	. . THROTTLE LEVER ASSY- LH		0023	0750	01
- 95	6561177-2	. . THROTTLE LEVER ASSY-RH		0539	0622	01
- 95A	6561177-4	. . THROTTLE LEVER ASSY- RH		0623	0750	01
96	5565221-19	. . . LEVER ASSY-LH THROTTLE		0539	0622	01
- 96A	6565143-1	. . . LEVER ASSY- LH		0623	0750	01
97	5565221-21	. . . LEVER ASSY-RH THROTTLE		0539	0622	01
- 97A	6565143-2	. . . LEVER ASSY- RH		0623	0750	01
98	5565239-1	. . . CAM-THROTTLE LEVER				01
99	MS21090-348	. . . SCREW				01
100	MS35333-73	. . . WASHER				01
101	NAS1149C0332R	. . . WASHER				01
102	6561178-1	. . . LEVER-LH THROTTLE				01
103	6561178-2	. . . LEVER-RH THROTTLE				01
104	6561178-3	. . . PIN				01
105	NAS1149C0432R	. . . WASHER				01
106	MS16624-4025	. . . RING-RETAINER				01
107	6715191-37	. . . WASHER				01
108	NAS1081C3A16L	. . . SETSCREW				01
109	5565236-4	. . PIN ASSY				02
110	NAS1149C0532R	. . WASHER				02
111	MS16624-4031	. . RING				02
112	5565237-17	. . WASHER				02
113	6665001-13	. . SWITCH SUPPORT				02
114	S2088-4	. . SWITCH S61				01
115	S2088-4	. . SWITCH S62				01
116	S2088-4	. . SWITCH SC009				01
117	S2088-4	. . SWITCH SC010				01
118	JE61	. . ACTUATOR-SWITCH	V91929			02
119	5565820-2	. . SPACER				02
120	NAS1635-02-16	. . SCREW		0539	0585	02
- 120A	NAS1635-02-18	. . SCREW		0586	0750	02
121	MS21042-02	. . NUT				02
122	NAS620-2	. . WASHER				02

- ITEM NOT ILLUSTRATED

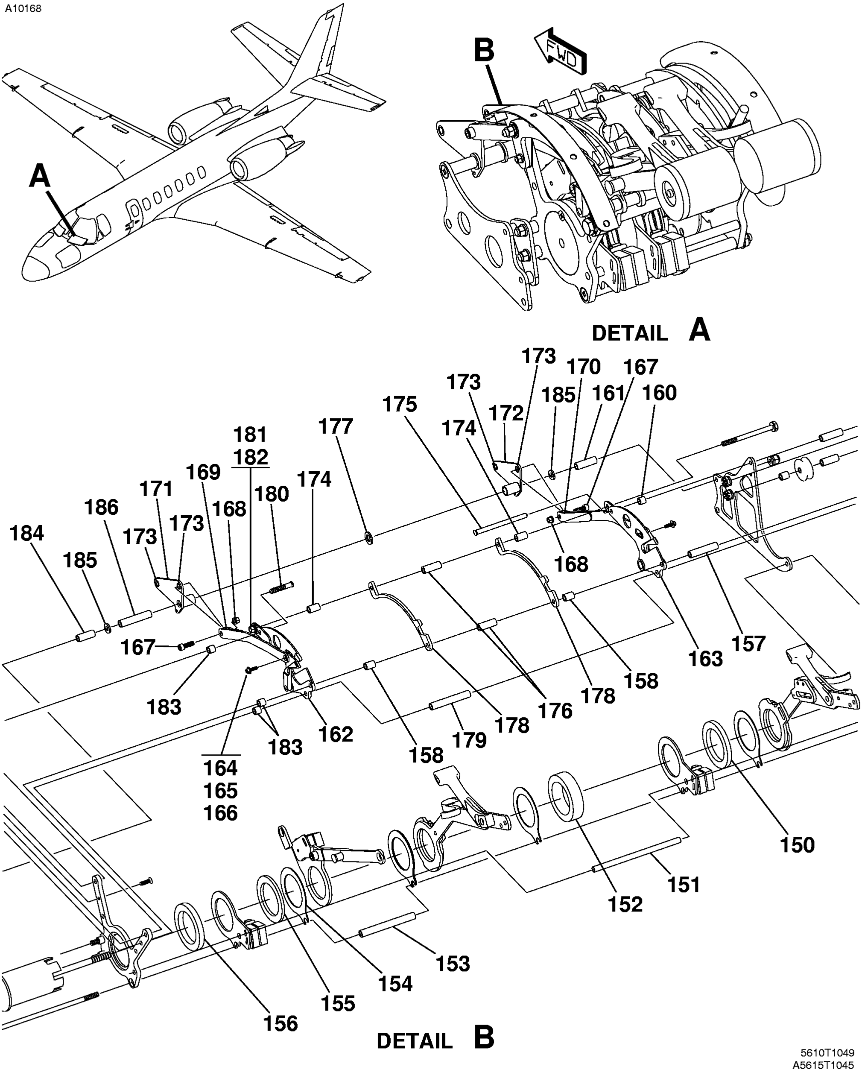

CONTROL QUADRANT ASSEMBLY
FIGURE 04 (SHEET 3)

FIG ITEM	PART NUMBER	NOMENCLATURE 1 2 3 4 5 6 7				UNITS PER ASSY
04						
150	6665001-17	. . SPACER				01
151	6561176-14	. . SPACER FSO 6561176-30		0539	0585	NP
- 151A	6561176-30	. . SPACER		0586	0750	01
152	6561176-4	. . SPACER				01
153	NAS43DD3-172FC	. . SPACER				01
154	0861213-1	. . FRICTION DISC				AR
155	6665001-14	. . SPACER				01
156	6665001-15	. . SPACER				01
157	NAS43DD3-87FC	. . SPACER				01
158	NAS43DD3-27FC	. . SPACER				AR
- 159		. . DELETED-NOT USED				
160	NAS43DD3-16FC	. . SPACER				AR
161	NAS43DD3-62FC	. . SPACER				01
162	6665004-1	. . CAM PLATE ASSY-LH FSO 6665004-13		0539	0631	NP
- 162A	6665004-13	. . CAM PLATE ASSY-LH		0632	0750	01
163	6665004-2	. . CAM PLATE ASSY-RH FSO 6665004-8		0539	0631	NP
- 163A	6665004-8	. . CAM PLATE ASSY-RH		0632	0750	01
164	4411SPCL-F3/16	. . SHOULDER SCREW	V00141			02
165	NAS1149FN416P	. . WASHER				02
166	MS21042-04	. . NUT				02
167	4417SPCL-F5/16	. . SHOULDER SCREW	V00141			02
168	MS21042-08	. . NUT				02
169	6561176-7	. . LINK ASSY-LH				01
170	6561176-8	. . LINK ASSY-RH				01
171	6665001-7	. . BELLCRANK WELD ASSY-LH				01
172	6665001-8	. . BELLCRANK WELD ASSY-RH				01
173	S143-3-3	. . BEARING				04
174	NAS43DD3-31FC	. . SPACER				02
175	NAS1581C3T36	. . BOLT				01
176	NAS43DD3-53FC	. . SPACER				02
177	NAS1149F0563P	. . WASHER				01
178	6561176-3	. . DETENT				02
179	NAS43DD3-123FC	. . SPACER				01
180	NAS1581C3T12	. . BOLT				01
181	NAS1149F0332P	. . WASHER				AR
182	MS21042-3	. . NUT				AR
183	NAS43DD3-17FC	. . SPACER				AR
184	NAS43DD3-51FC	. . SPACER				01
185	NAS1149F0363P	. . WASHER				AR
186	NAS43DD3-97FC	. . SPACER				01

- ITEM NOT ILLUSTRATED

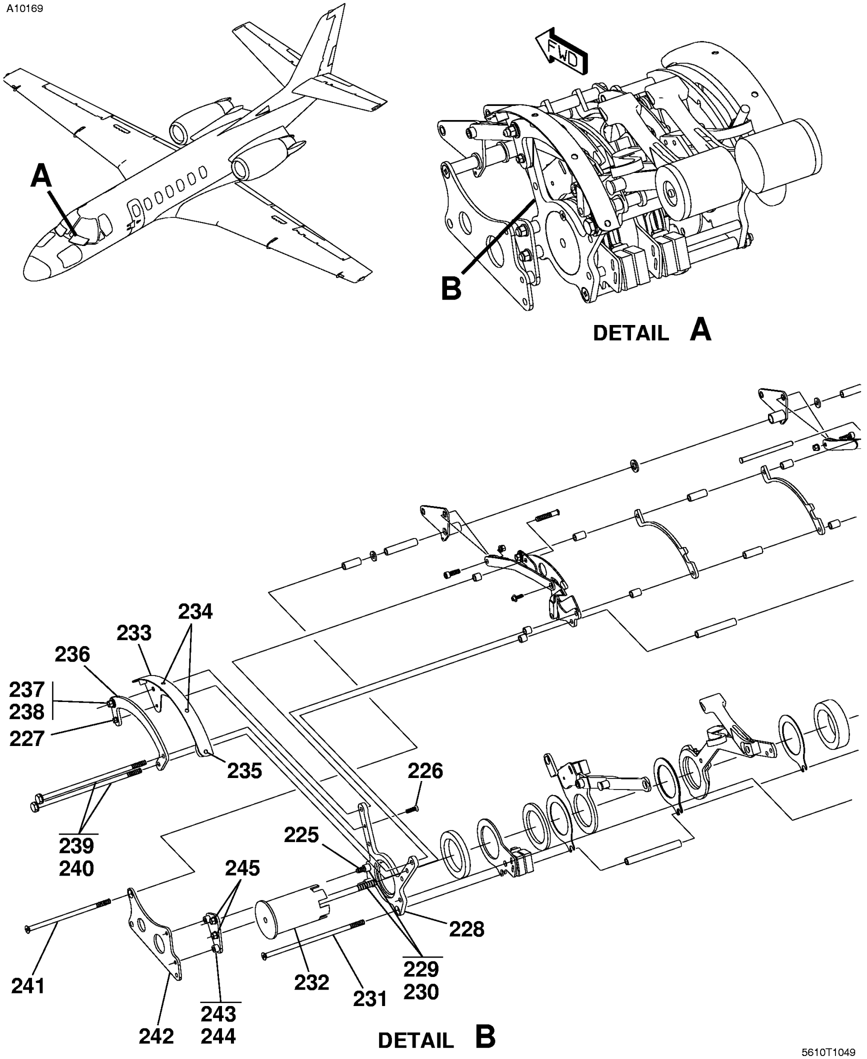

CONTROL QUADRANT ASSEMBLY
FIGURE 04 (SHEET 4)

FIG ITEM	PART NUMBER	NOMENCLATURE 1 2 3 4 5 6 7			UNITS PER ASSY
04					
225	MS24693-S23	. . SCREW			01
226	MS24693-S28	. . SCREW			01
227	MS21042-06	. . NUT			01
228	6561176-27	. . PLATE-LH OUTBOARD MOUNTING			01
229	MS24694-S54	. . SCREW			02
230	NAS43DD3-16FC	. . SPACER			01
231	NAS333CP50	. . BOLT			01
232	6561176-5	. . HUB ASSY			01
233	6561176-15	. . BRACKET ASSY			01
234	MS21069L08K	. . . NUTPLATE			03
235	MS21071L08K	. . NUTPLATE			01
236	5565254-2	. . PLATE			01
237	MS21042-3	. . NUT			01
238	NAS1149F0332P	. . WASHER			01
239	AN3-52A	. . BOLT			02
240	NAS1149F0332P	. . WASHER			02
241	NAS333CPA37	. . BOLT			01
242	6561176-13	. . PLATE-LH MOUNTING			01
243	5565249-3	. . PLATE			01
244	NAS42HT5-12	. . SPACER			02
245	MS21042-3	. . NUT			02
- 246	5565755-5	. . WHEEL ASSY	0539	0652	01
- 246A	5565755-7	. . WHEEL ASSY	0653	0750	01
- 247	5565756-1	. . . WHEEL FSO 5565756-3	0539	0652	NP
- 247A	5565756-3	. . . WHEEL	0653	0750	01
- 248	NAS1189-06P16LKH	. . . SCREW			04
- 249	AN3-57	. . . BOLT			01
- 250	5565116-1	. . . SPROCKET ASSY			01
- 251	5565755-4	. . . BEARING			01
- 252	5565755-6	. . . SPACER			01

- ITEM NOT ILLUSTRATED

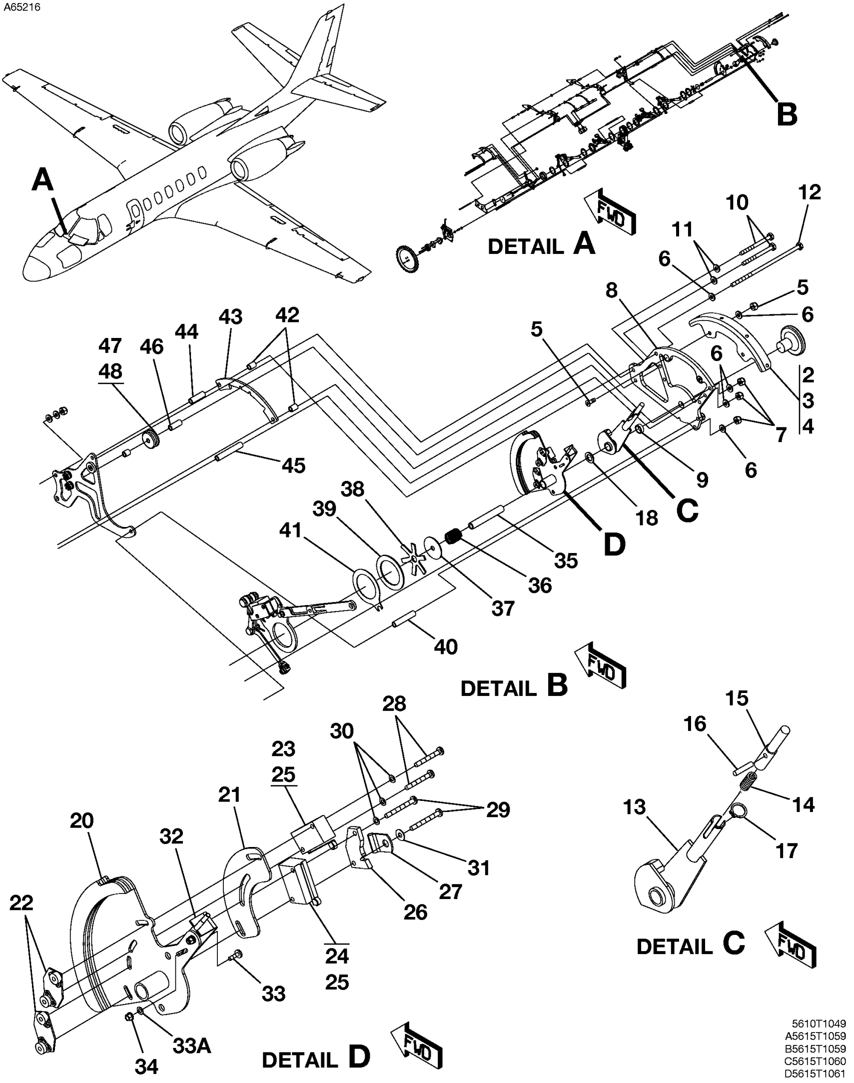

CONTROL QUADRANT ASSEMBLY
FIGURE 04A (SHEET 1)

FIG ITEM	PART NUMBER	NOMENCLATURE 1 2 3 4 5 6 7				UNITS PER ASSY
04A						
-		CONTROL QUADRANT ASSEMBLY		0751	& ON	RF
- 1	6561189-1	. CONTROL QUADRANT ASSY-FSO 6561189-11		0751	0751	NP
- 1A	DDA05289-1	. CONTROL QUADRANT ASSY REF 6561189		0752	0787	01
- 1B	DDA05526-1	. CONTROL QUADRANT ASSY REF 6561189		0770 0774	0770 0787	01
- 1C	6561189-11	. CONTROL QUADRANT ASSY		0788	& ON	01
2	6561176-16	. . BRACKET ASSY-CONTROL QUADRANT RH				01
3	MS21069L08K	. . . NUTPLATE				03
4	MS21071L08K	. . . NUTPLATE				01
5	MS24694-S50	. . SCREW				02
6	NAS1149F0332P	. . WASHER				AR
7	MS21083N3	. . NUT				AR
8	6561176-1	. . PLATE-OUTBOARD RH MOUNTING				01
9	NAS43DD6-11FC	. . SPACER				01
10	AN3-22	. . BOLT				02
11	NAS1149F0363P	. . WASHER				02
12	AN3-52A	. . BOLT				01
13	5565813-34	. . SECTOR ASSY				01
14	5565812-5	. . SPRING				01
15	5565812-7	. . STUD-THREAD-FSO 5565812-8		0751	0787	NP
- 15A	5565812-8	. . STUD-THREAD		0788	& ON	01
16	MS16562-223	. . PIN				01
17	MS16624-1037	. . RING				01
18	NAS1149F0663P	. . WASHER				01
- 19	6665002-1	. . SECTOR ASSY-FLAP FOLLOW-UP				01
20	6665002-2	. . . BELLCRANK ASSY				01
21	5565820-5	. . . SPACER				01
22	5565810-61	. . . PLATE ASSY-SWITCH MOUNT				02
23	V3-1001	. . . SWITCH-FLAPS DOWN SC011	V91929			01
24	V3-1001	. . . SWITCH-FLAPS UP SC012	V91929			01
25	S1913-1	. . . ACTUATOR-SWITCH				02
26	5565810-62	. . . PLATE-SWITCH				01
27	TA12C59SC02HA	. . . CLAMP	V84971			01
28	MS35206-220	. . . SCREW				02
29	MS35206-221	. . . SCREW				02
30	NAS620-4L	. . . WASHER				03
31	NAS1149FN416P	. . . WASHER				01
32	6561188-21	. . INDICATOR ASSY-FLAP POSITION				01
- 32A	6561188-41	. . POINTER - FLAP POSITION				01
33	MS35206-214	. . SCREW				02
33A	NAS620-4L	. . WASHER				02
34	MS21042-04	. . NUT				02
35	5565817-6	. . BEARING SPACER-FLAP PRE-SELECT				01
36	LC049HJ05MMS	. . SPRING	V84830			01
37	0861209-1	. . WASHER				01
38	5565824-1	. . SPRING				01
39	5565804-9	. . SPACER				01
40	NAS43DD3-100FC	. . SPACER				01
41	0861213-1	. . FRICTION DISC				01
42	NAS43DD3-27FC	. . SPACER				02
43	6565130-1	. . DETENT SEGMENT				01
44	NAS43DD3-65FC	. . SPACER				01
45	NAS43DD3-122FC	. . SPACER				01
46	NAS43DD3-50FC	. . SPACER				01
47	S394	. . PULLEY				01
48	0411783-0	. . BUSHING				01

- ITEM NOT ILLUSTRATED

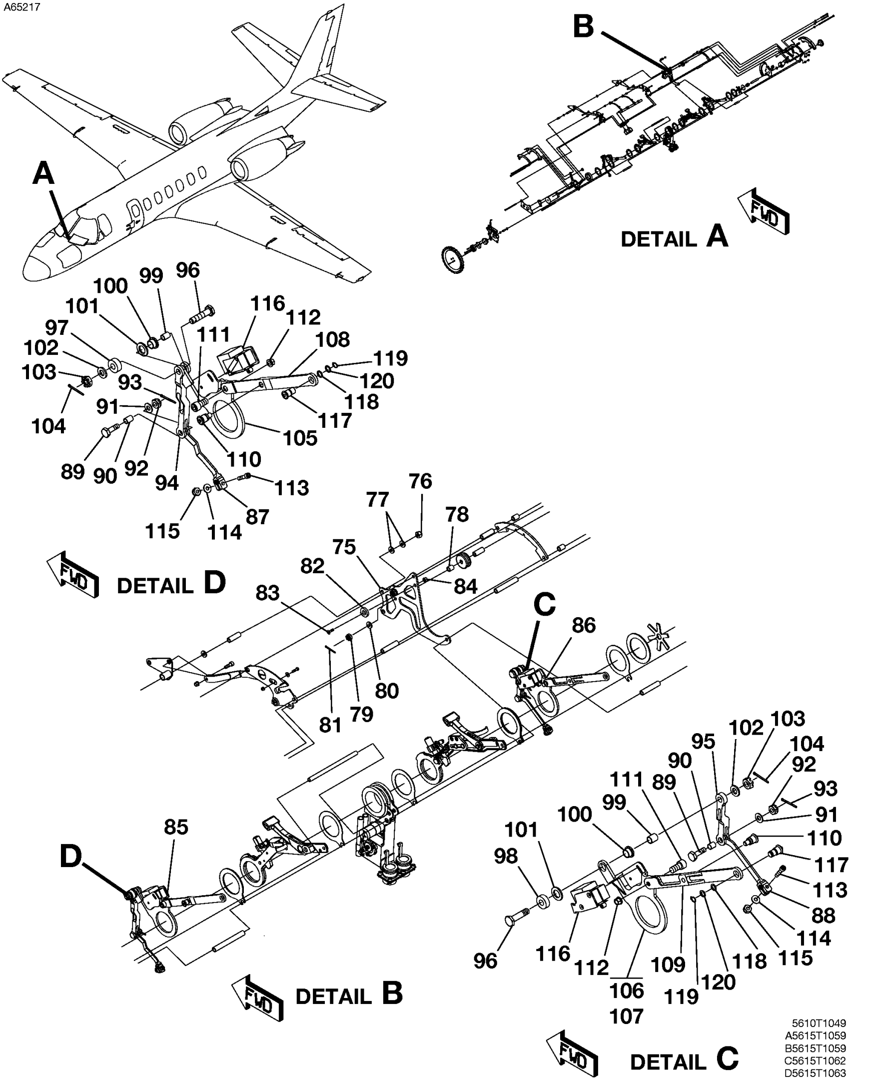

CONTROL QUADRANT ASSEMBLY
FIGURE 04A (SHEET 2)

FIG ITEM	PART NUMBER	NOMENCLATURE 1 2 3 4 5 6 7				UNITS PER ASSY
04A						
75	6561188-28	. . MOUNTING PLATE-CENTER FSO 6561188-49		0751	0787	NP
- 75A	6561188-49	. . MOUNTING PLATE-CENTER		0788	& ON	01
76	MS21044N3	. . NUT				01
77	NAS1149F0363P	. . WASHER				01
78	NAS43DD3-22FC	. . SPACER				01
79	MS17826-3	. . NUT				02
80	NAS1149F0363P	. . WASHER				02
81	MS24665-132	. . COTTER PIN				02
82	5565254-6	. . BUTTON				01
83	MS24693-S27	. . SCREW				01
84	MS21042-06	. . NUT				01
85	6561189-5	. . THROTTLE LINK ASSY LH FSO 6561189-13		0751	0787	NP
- 85A	6561189-13	. . THROTTLE LINK ASSY LH		0788	& ON	01
86	6561189-6	. . THROTTLE LINK ASSY RH FSO 6561189-14		0751	0787	NP
- 86A	6561189-14	. . THROTTLE LINK ASSY RH		0788	& ON	01
87	6561188-17	. . . RVDT LEVER-LH				01
88	6561188-18	. . . RVDT LEVER-RH				01
		ATTACHING PARTS				
89	AN3C5	. . . BOLT				01
90	S2614-3-25	. . . BUSHING				01
91	NAS1149C0332R	. . . WASHER				01
92	AN310C3	. . . NUT				01
93	MS24665-134	. . . COTTER PIN				01
		—*—				
94	6561188-7	. . . RVDT LINK-LH				01
95	6561188-14	. . . RVDT LINK-RH				01
		ATTACHING PARTS				
96	NAS6204-12D	. . . BOLT		0751	0787	01
- 96A	NAS6204-15D	. . . BOLT-LH		0788	& ON	01
- 96B	NAS6204-11D	. . . BOLT-RH		0788	& ON	01
97	S2614-4-16	. . . BUSHING-LH ONLY				01
98	S2614-4-18	. . . BUSHING-RH ONLY				01
99	5565800-11	. . . SPACER		0751	0787	01
- 99A	6561188-57	. . . SPACER		0788	& ON	01
- 99B	S2614-4-17	. . . BUSHING-LH		0788	& ON	01
100	5565800-12	. . . BUSHING				01
101	5565800-13	. . . WASHER				01
102	NAS1149F0463P	. . . WASHER				01
- 102A	NAS1149F0416P	. WASHER		0788	& ON	01
103	MS17826-4	. . . NUT				01
104	MS24665-134	. . . COTTER PIN				01
105	5565224-7	. . . THROTTLE ARM ASSY-LH				01
106	6561188-24	. . . THROTTLE ARM ASSY-RH				01
107	S1003-89A	. . . . BEARING				01
108	6561188-47	. . . THRUST REVERSER LINK ASSY-LH				01
109	6561188-48	. . . THRUST REVERSER LINK ASSY-RH				01
110	5565248-1	. . . . ROLLER PIN ASSY				01
		ATTACHING PARTS				
111	4427SPCL-F3/8	. . . SHOULDER SCREW	V00141			01
112	MS21042-3	. . . NUT				01
		—*—				
113	NAS1352-06H10P	. . . SCREW				01
114	NAS1149FN632P	. . . WASHER				01
115	MS21044N06	. . . NUT				01
116		. . . SWITCH BUNDLE ASSY REFER TO 78-30-01 FIGURE 01				RF
117	5565236-4	. . PIN ASSY				02
118	NAS1149C0532R	. . WASHER				02
119	MS16624-4031	. . RING				02
120	5565237-17	. . WASHER				02

- ITEM NOT ILLUSTRATED

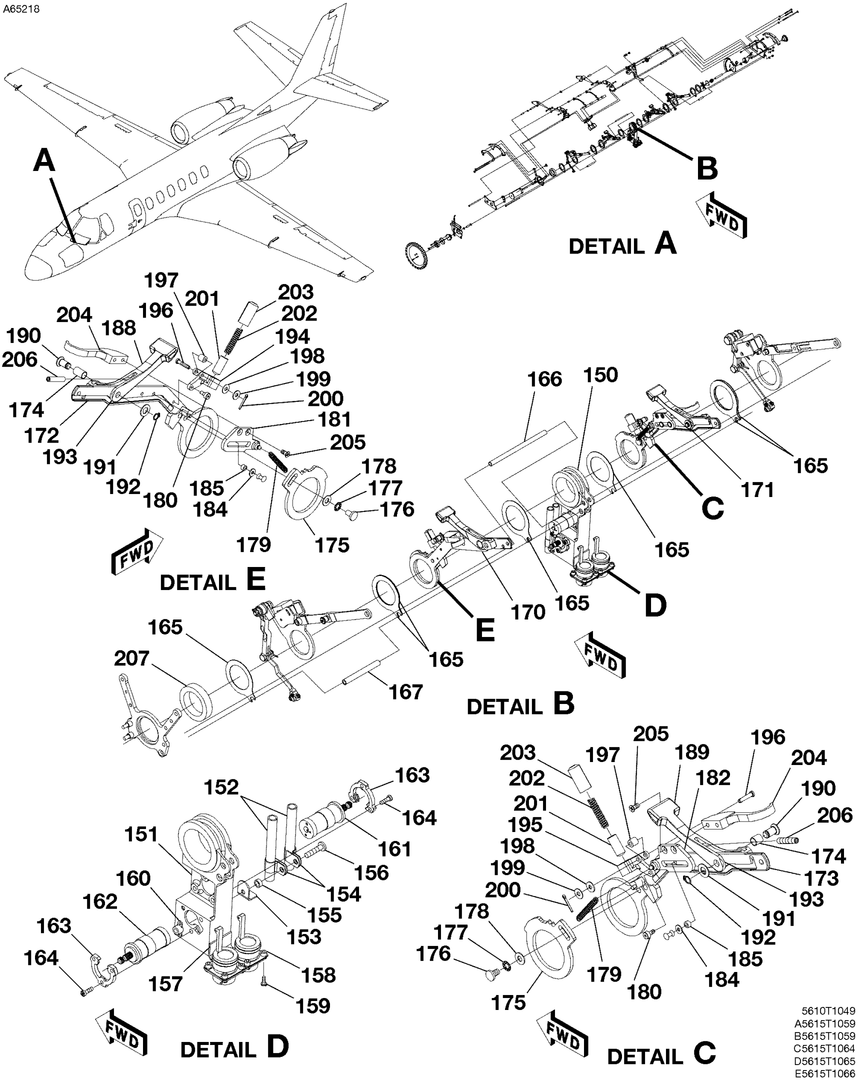

CONTROL QUADRANT ASSEMBLY
FIGURE 04A (SHEET 3)

FIG ITEM	PART NUMBER	NOMENCLATURE 1 2 3 4 5 6 7				UNITS PER ASSY
04A						
150	6561189-2	. . RVDT/SWITCH BRACKET ASSY				01
151	6561188-1	. . . RVDT BRACKET ASSY				01
152	CM3663-6	. . . TUBING BKI 3.00 INCH				02
153	6561188-35	. . . ANGLE				01
154	AN742D6	. . . CLAMP				02
155	NAS43DD3-17FC	. . . SPACER				01
156	MS27039-1-13	. . . SCREW				01
157	6561188-13	. . . CONNECTOR BRACKET				01
158	M85528/2-14A	. . . MOUNTING FLANGE				02
159	MS35206-214	. . . SCREW				08
160	MS21070L3	. . . NUTPLATE				01
161	3A21200096B	. . . RVDT POSITION SENSOR LC002	V19710			01
162	3A21200096B	. . . RVDT POSITION SENSOR LC001	V19710			01
163	6965205-59	. . . CLAMP PLATE				02
164	NAS1191E06P7	. . . SCREW				02
165	0861213-1	. . FRICTION DISC				05
166	6561176-30	. . SPACER				01
167	NAS43DD3-172FC	. . SPACER				01
- 168	6561189-3	. . THROTTLE LEVER ASSY-LH FSO 6561189-15		0751	0751	NP
- 169	6561189-4	. . THROTTLE LEVER ASSY-RH FSO 6561189-16		0751	0751	NP
170	6561189-9	. . THROTTLE LEVER ASSY-LH FSO 6561189-15		0752	0769	NP
				0771	0773	
- 170A	DDA05526-3	. . THROTTLE LEVER ASSY-LH REF 6561189		0770	0770	01
				0774	0787	
- 170B	6561189-15	. . THROTTLE LEVER ASSY-LH		0788	& ON	01
171	6561189-10	. . THROTTLE LEVER ASSY-RH FSO 6561189-16		0752	0769	NP
				0771	0773	
- 171A	DDA05526-4	. . THROTTLE LEVER ASSY-RH REF 6561189		0770	0770	01
				0774	0787	
- 171B	6561189-16	. . THROTTLE LEVER ASSY-RH		0788	& ON	01
172	6561188-29	. . . LEVER ASSY LH FSO 6561188-51		0751	0787	NP
- 172A	6561188-51	. . . LEVER ASSY LH		0788	& ON	01
173	6561188-30	. . . LEVER ASSY RH FSO 6561188-52		0751	0787	NP
- 173A	6561188-52	. . . LEVER ASSY RH		0788	& ON	01
174	S1003-89A	. . . . BEARING				01
175	5565239-1	. . . CAM				01
176	MS21090-348	. . . SCREW-CAM ATTACH				01
177	MS35333-73	. . . WASHER-CAM ATTACH				01
178	NAS1149C0332R	. . . WASHER-CAM ATTACH				01
179	S2952-73	. . . SPRING				01
180	PZ1-3	. . . SCREW	V29440			01
181	6561188-3	. . . THROTTLE LOCK-LH				01
182	6561188-4	. . . THROTTLE LOCK-RH				01
- 183		. . . DELETED-NOT USED				R
184	NAS1149CN432R	. . . WASHER-THROTTLE LOCK ATTACH				02
185	5565803-11	. . . SLEEVE-THROTTLE LOCK ATTACH				02
- 186	6561178-1	. . . LEVER-LH		0751	0751	01
- 187	6561178-2	. . . LEVER-RH		0751	0751	01
188	6561178-5	. . . LEVER-LH		0752	& ON	01
189	6561178-6	. . . LEVER-RH		0752	& ON	01
190	6561178-3	. . . PIN-LEVER ATTACH				01
191	NAS1149C0432R	. . . WASHER-LEVER ATTACH		0751	0787	01
- 191A	NAS1149C0463R	. . . WASHER-LEVER ATTACH		0788	& ON	01
192	MS16624-4025	. . . RING-LEVER ATTACH				01
193	6715191-37	. . . WASHER				AR
194	6561188-15	. . . DETENT LEVER-LH				01
195	6561188-16	. . . DETENT LEVER-RH				01
196	6715191-25	. . . PIN				01
197	S1997-2G4	. . . BEARING				01
198	NAS1149FN632P	. . . WASHER				01
199	NAS1149FN616P	. . . WASHER				01
200	MS9245-27	. . . COTTER PIN				01
201	6715191-23	. . . PLUNGER				01
202	S2951-4	. . . SPRING				01
203	6715191-24	. . . ADJUSTING SCREW				01
204	5565225-13	. . . HANDLE				01
205	NAS1189-06P5WL	. . . SCREW-HANDLE ATTACH				02
206	NAS1081C3A16L	. . . SETSCREW		0751	0787	01
- 206A	NAS1081C3A12L	. . . SETSCREW REFER TO NOTE 1		0788	& ON	01
207	6561188-8	. . SPACER FSO 6561188-50		0751	0787	NP
- 207A	6561188-50	. . SPACER		0788	& ON	01

NOTE 1—AIRPLANES -0788 AND ON AND AIRPLANES -0733 THRU -0761 AND -0763 THRU -0784 INCORPORATING SB560-76-03.

- ITEM NOT ILLUSTRATED

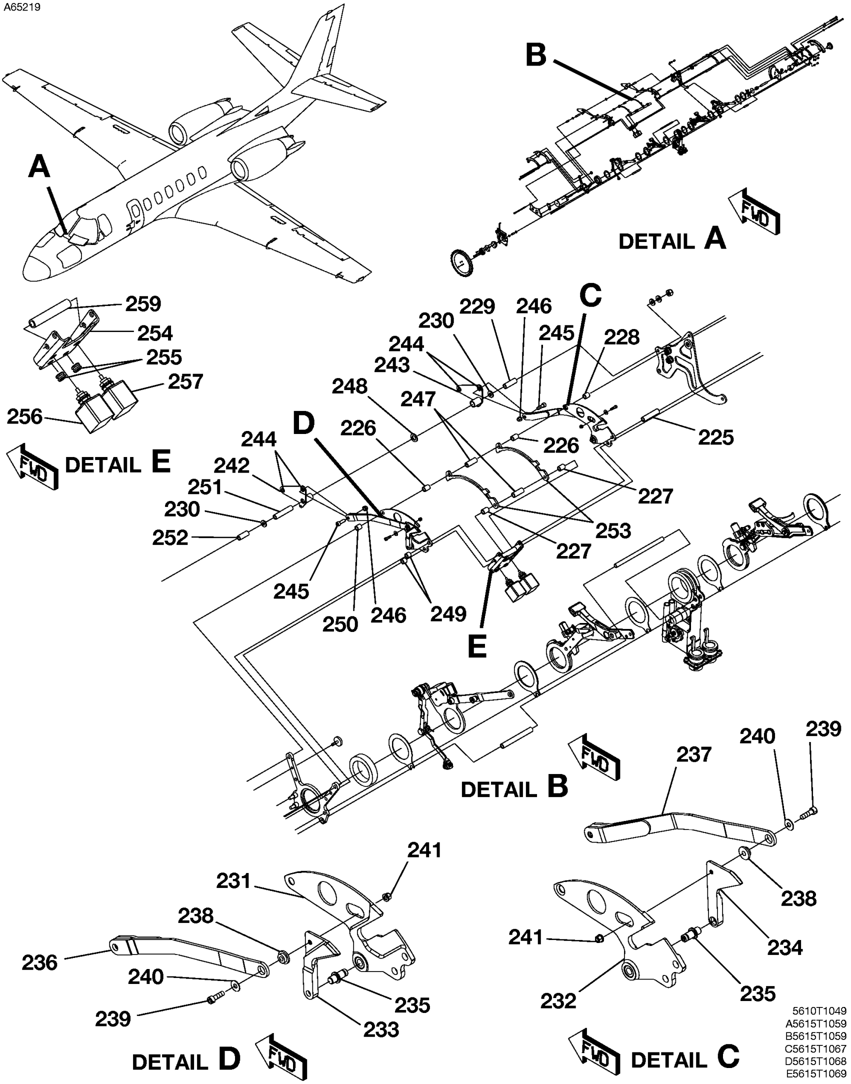

CONTROL QUADRANT ASSEMBLY
FIGURE 04A (SHEET 4)

FIG ITEM	PART NUMBER	NOMENCLATURE 1 2 3 4 5 6 7				UNITS PER ASSY
04A						
225	NAS43DD3-87FC	. . SPACER				01
226	NAS43DD3-27FC	. . SPACER				02
227	NAS43DD3-23FC	. . SPACER				02
228	NAS43DD3-20FC	. . SPACER				01
229	NAS43DD3-62FC	. . SPACER				01
230	NAS1149F0363P	. . WASHER				02
231	6665004-23	. . CAM PLATE ASSY-LH		0751	0751	01
- 231A	DDA05289-3	. . CAM PLATE ASSY REF 6561189		0752	0787	01
- 231B	6665004-27	. . CAM PLATE ASSY-LH		0788	& ON	01
232	6665004-24	. . CAM PLATE ASSY-RH		0751	0751	01
- 232A	DDA05289-4	. . CAM PLATE ASSY REF 6561189		0752	0787	01
- 232B	6665004-28	. . CAM PLATE ASSY-RH		0788	& ON	01
233	6561188-43	. . . INTERLOCK CAM ASSY LH				01
234	6561188-44	. . . INTERLOCK CAM ASSY RH				01
235	5565246-1	. . . . PIN				01
236	6561176-7	. . LINK ASSY-LH				01
237	6561176-8	. . LINK ASSY-RH				01
238	B11-1	. . . BUSHING	V00141			01
239	4411SPCL-F3/16	. . SHOULDER SCREW	V00141			01
240	NAS1149FN416P	. . WASHER				01
241	MS21042-04	. . NUT				01
242	6665001-7	. . BELLCRANK WELD ASSY-LH				01
243	6665001-8	. . BELLCRANK WELD ASSY-RH				01
244	S143-3-3	. . BEARING				04
245	4417SPCL-F5/16	. . SHOULDER SCREW	V00141			02
246	MS21042-08	. . NUT				02
247	NAS43DD3-53FC	. . SPACER				02
248	NAS1149F0563P	. . WASHER				01
249	NAS43DD3-17FC	. . SPACER				02
250	NAS43DD3-21FC	. . SPACER				01
251	NAS43DD3-97FC	. . SPACER				01
252	NAS43DD3-51FC	. . SPACER				01
253	6365821-22	. . DETENT PLATE				02
254	6561188-23	. . SWITCH BRACKET ASSY				01
255	NAS557-3B	. . . GROMMET				02
256	A4-1134-1	. . SWITCH S1107	V81640			01
257	A4-1134-1	. . SWITCH S1108	V81640			01
- 258	6518130-56	. . WBA-QUADRANT				01
259	NAS43DD3-115FC	. . SPACER				01

- ITEM NOT ILLUSTRATED

A65220

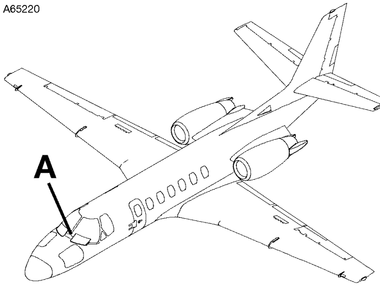

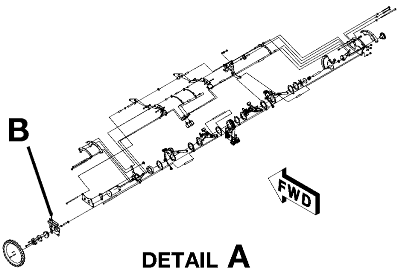

DETAIL A

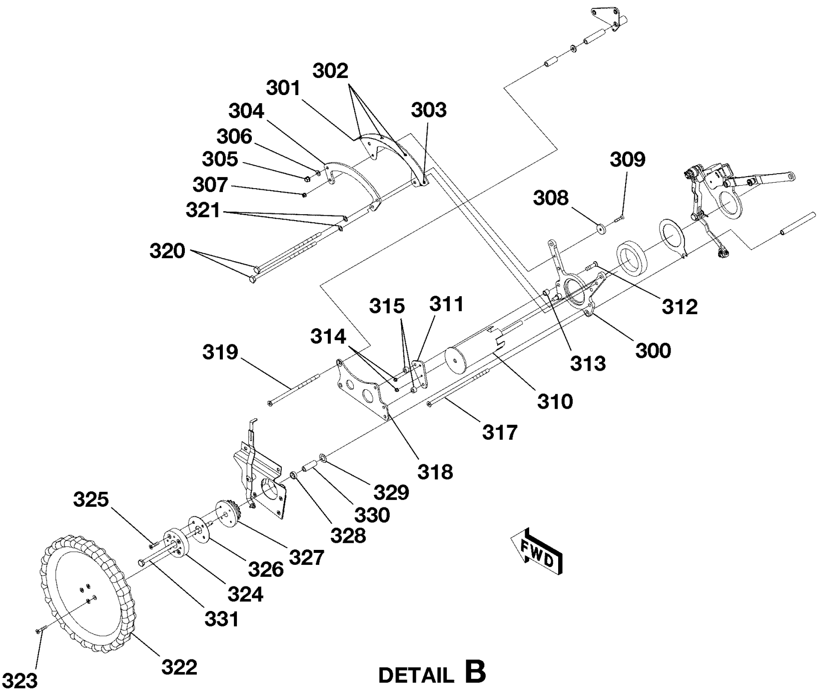

DETAIL B

5610T1049
A5615T1059
B5615T1059

CONTROL QUADRANT ASSEMBLY
FIGURE 04A (SHEET 5)

FIG ITEM	PART NUMBER	NOMENCLATURE 1 2 3 4 5 6 7			UNITS PER ASSY
04A					
300	6561176-27	. . MOUNTING PLATE-OUTBD LH			01
301	6561176-15	. . BRACKET ASSY			01
302	MS21069L08K	. . . NUTPLATE			03
303	MS21071L08K	. . NUTPLATE			01
304	5565254-2	. . PLATE			01
305	MS21042-3	. . NUT			01
306	NAS1149F0332P	. . WASHER			01
307	MS21042-06	. . NUT			01
308	5565254-6	. . BUTTON			01
309	MS24693-S29	. . SCREW	0751	0787	01
- 309A	MS24693-S30	. . SCREW	0788	& ON	01
310	6561176-5	. . HUB ASSY			01
311	5565249-3	. . PLATE			01
312	MS24694-S54	. . SCREW			02
313	NAS43DD3-16FC	. . SPACER			02
314	MS21042-3	. . NUT			02
315	5565249-3	. . PLATE			01
- 316		. . DELETED-NOT USED			R
317	NAS333CP50	. . BOLT			01
318	6561176-13	. . MOUNTING PLATE-LH			01
319	NAS333CPA37	. . BOLT			01
320	AN3-52A	. . BOLT			02
321	NAS1149F0332P	. . WASHER			02
322	5565756-3	. WHEEL			01
		ATTACHING PARTS			
323	MS24693-S30	. SCREW			04
		—*—			
324	6661042-15	. SPACER			01
		ATTACHING PARTS			
325	MS24693-S29	. SCREW			04
		—*—			
326	6661042-16	. SHIM			01
327	5565116-1	. SPROCKET ASSY			01
328	NAS43HT5-9	. SPACER			01
329	NAS1149D0516K	. WASHER			AR
330	5565755-4	. BEARING			01
331	AN3-57	. BOLT			01
- 332	MS21083N3	. NUT			01

- ITEM NOT ILLUSTRATED

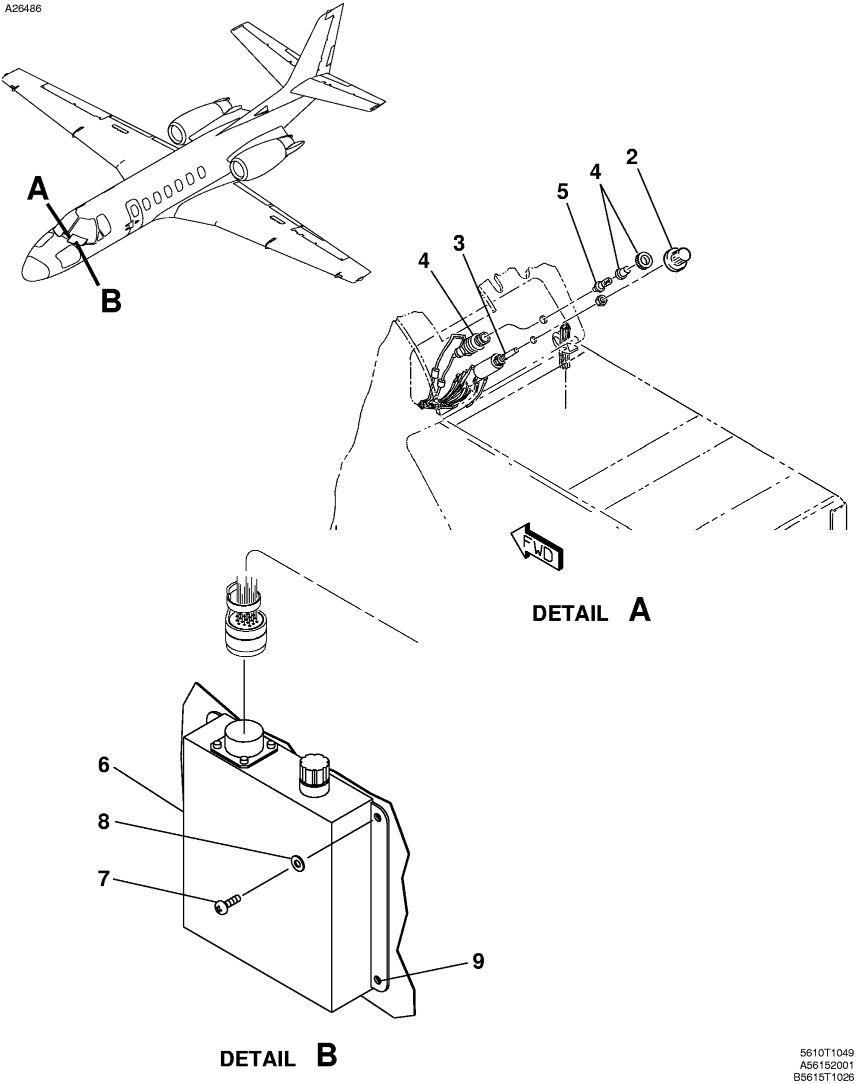

ENGINE SYNCHRONIZER
FIGURE 02 (SHEET 1)

FIG ITEM	PART NUMBER	NOMENCLATURE 1 2 3 4 5 6 7			UNITS PER ASSY
02					
-		ENGINE SYNCHRONIZER	0539	& ON	RF
- 1		. CIRCUIT BREAKER-REFER TO 24-50-03 FIGURE 01B			RF
2	CM3590-1	. KNOB-CONTROL ENGINE SYNCHRONIZER SWITCH S118			01
3	09YY50019	. SWITCH-ENGINE SYNC S118 . . . . V81703			01
4	102SKI102375ALUC	. LIGHT ASSY-INDICATOR L17 . . . . V08717			01
5	CM6839	. BULB-REPLACEMENT V07294			01
6	213693	. CONTROL BOX-SYNCHRONIZER CU9 . . . . V66503			01
		ATTACHING PARTS			
7	MS35206-245	. SCREW			04
8	NAS1149FN832P	. WASHER			04
		—*—			
9	MS21069L08	. NUTPLATE			04

- ITEM NOT ILLUSTRATED

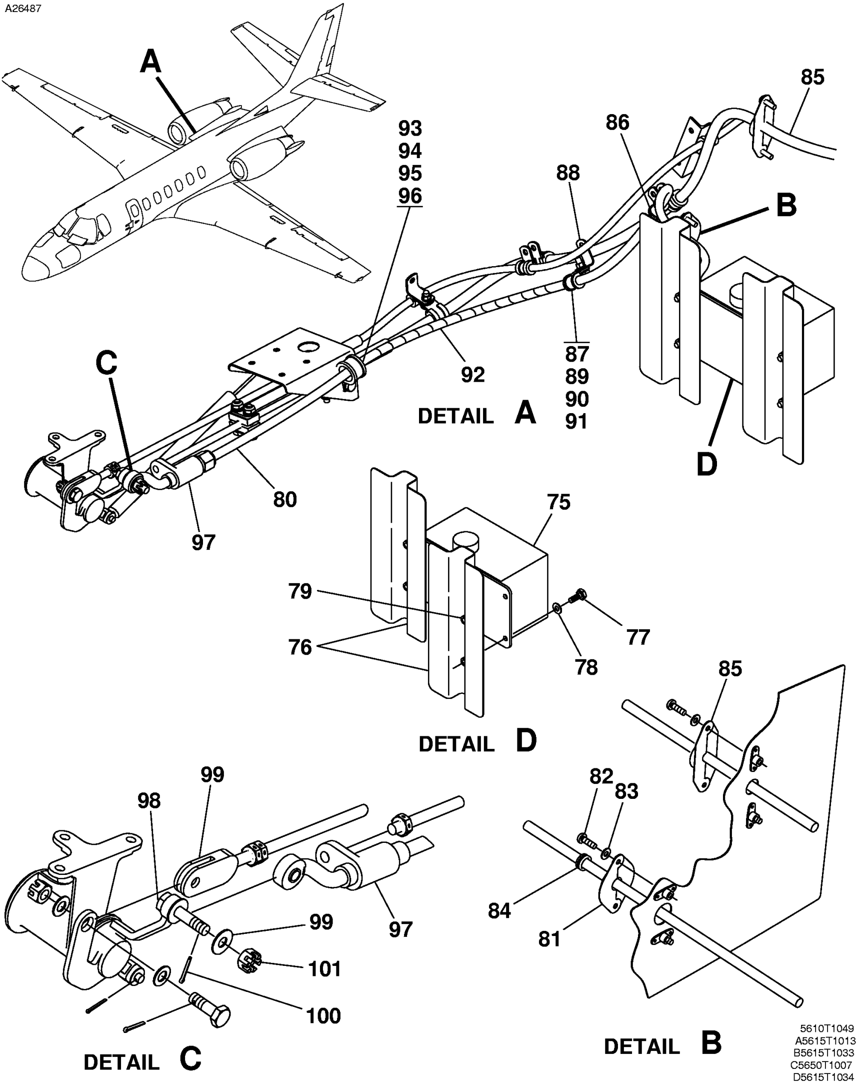

ENGINE SYNCHRONIZER
FIGURE 02 (SHEET 2)

FIG ITEM	PART NUMBER	NOMENCLATURE 1 2 3 4 5 6 7		UNITS PER ASSY
02				
75	5485-066	. ACTUATOR ASSY-ENGINE SYNCHRONIZER		01
76	6555540-5	. BRACKET ASSY		02
		ATTACHING PARTS		
77	AN3-4A	. BOLT		04
78	NAS1149D0332K	. WASHER		04
		—*—		
79	MS21069L3	. . NUTPLATE		02
80	213031	. SHAFT-FLEX ACTUATOR TO ENGINE CONTROLS	V66503	01
81	S353-6	. SHIELD-FIREWALL		02
		ATTACHING PARTS		
82	MS27039C0806	. SCREW		02
83	NAS1149CN832R	. WASHER		02
84	NAS557-6A	. GROMMET		01
		—*—		
85		. THROTTLE CABLES-REFER TO 76-10-00 FIGURE 03		RF
86	MS21919WH6	. CLAMP		01
87	MS21919WH5	. CLAMP		01
88	S3100-8	. BRACKET		01
		ATTACHING PARTS		
89	AN3-4A	. BOLT		01
90	NAS1149D0332K	. WASHER		01
91	MS21042-3	. NUT		01
		—*—		
92	S1399-3	. WRAP-SPIRAL FLEX SHAFT BKI		AR
93	MS21919WH10	. CLAMP		01 R
		ATTACHING PARTS		
94	AN3-4A	. BOLT		01
95	NAS1149D0332K	. WASHER		01
96	MS21042-3	. NUT		01
		—*—		
97	5333-005	. ROD END ASSY-RH	V66503	01
		ATTACHING PARTS		
98	AN4-11	. BOLT		01
99	S1450-4-10-032	. WASHER		02
100	MS24665-229	. COTTER PIN		01
101	MS17825-4	. NUT		01
		—*—		

- ITEM NOT ILLUSTRATED

CHAPTER SECTION SUBJECT		NUMBER OF PAGES	DATE
77 - TITLE			
77 - LIST OF EFFECTIVE PAGES			
77 - RECORD OF TEMPORARY REVISIONS			
77 - TABLE OF CONTENTS			
77-10-00	Figure 01	2	Aug 1/2015
77-10-00	Figure 03	2	Mar 1/2010
77-10-00	Figure 03A	2	Mar 1/2010
77-20-00	Figure 01	2	Apr 5/2005
77-20-00	Figure 02	2	Apr 5/2005
77-30-00	Figure 01	2	May 1/2001
77-40-01	Figure 01	2	Feb 1/2009
77-40-10	Figure 01	2	Mar 1/2010

© Cessna Aircraft Company

SUBJECT	CHAPTER SECTION SUBJECT	FIGURE	EFFECTIVITY START	EFFECTIVITY END
ENGINE POWER INDICATING SYSTEM	77-10-00	01	0001	0259
ENGINE POWER INDICATING SYSTEM	77-10-00	03	0539	0750
STANDBY ENGINE INSTRUMENTS	77-10-00	03A	0752	& ON
ENGINE TEMPERATURE INDICATING SYSTEM	77-20-00	01	0001	0259
ENGINE TEMPERATURE INDICATING	77-20-00	02	0260	& ON
ENGINE VIBRATION MONITORING SYSTEM	77-30-00	01	0539	& ON
DATA CONCENTRATOR UNIT	77-40-01	01	0752	& ON
INTEGRATED ENGINE INDICATING INSTRUMENTS	77-40-10	01	0260	0538

© Cessna Aircraft Company

A15235

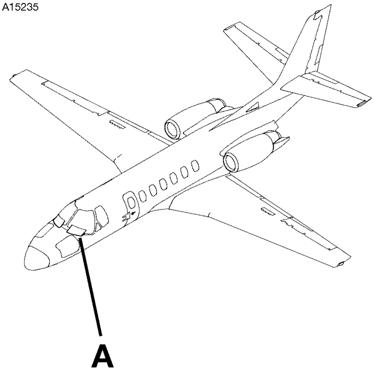

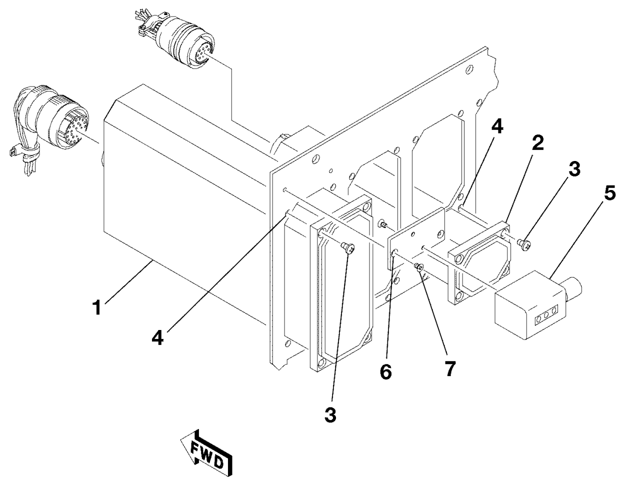

DETAIL A

5610T1001A
A5618T1041

ENGINE POWER INDICATING SYSTEM
FIGURE 01 (SHEET 1)

FIG ITEM	PART NUMBER	NOMENCLATURE 1 2 3 4 5 6 7			UNITS PER ASSY
01					
-		ENGINE POWER INDICATING SYSTEM	0001	0259	RF
1	9912147-27	. INDICATOR-TACHOMETER FAN SPEED REFER TO NOTE 1			01
2	9912147-28	. INDICATOR-TACHOMETER TURBINE SPEED REFER TO NOTE 1			01
		ATTACHING PARTS			
3	MS35214-26	. SCREW			04
4	H111F1C93-110	. INSERT V71286			04
		—*—			
5	1009	. COUNTER-FAN SPEED LIMIT V1V656			01
6	9662270-3	. PLATE-MOUNTING			01
		ATTACHING PARTS			
7	MS24693-B1	. SCREW			02 R
- 8	H111FOC93-110	. INSERT			02
		—*—			

NOTE 1—REFER TO LIST OF VENDOR PUBLICATIONS FOR PUBLICATIONS AVAILABLE FOR THIS PART.

- ITEM NOT ILLUSTRATED

CHAPTER SECTION SUBJECT		NUMBER OF PAGES	DATE
78 - TITLE			
78 - LIST OF EFFECTIVE PAGES			
78 - RECORD OF TEMPORARY REVISIONS			
78 - TABLE OF CONTENTS			
78-10-00	Figure 01	2	Jun 5/2000
78-30-00	Figure 01	2	Mar 1/2011
78-30-00	Figure 01A	2	Feb 1/2007
78-30-00	Figure 02	4	Feb 1/2009
78-30-00	Figure 03	4	Feb 1/2007
78-30-01	Figure 01	2	Feb 1/2007
78-31-00	Figure 01	2	Aug 1/2007

© Cessna Aircraft Company

SUBJECT	CHAPTER SECTION SUBJECT	FIGURE	EFFECTIVITY START	EFFECTIVITY END
ENGINE EXHAUST NOZZLE	78-10-00	01	0001	0538
THRUST REVERSER INSTALLATION	78-30-00	01	0001	0538
THRUST REVERSER INSTALLATION	78-30-00	01A	0539	& ON
THRUST REVERSER HYDRAULIC SYSTEM	78-30-00	02	0001	0538
THRUST REVERSER HYDRAULIC SYSTEM	78-30-00	03	0539	& ON
THRUST REVERSER ELECTRICAL CONTROL SYSTEM	78-30-01	01		
THRUST REVERSER ELECTRICAL EQUIPMENT	78-31-00	01		

© Cessna Aircraft Company

CHAPTER 79

OIL

CHAPTER SECTION SUBJECT		NUMBER OF PAGES	DATE
79 - TITLE			
79 - LIST OF EFFECTIVE PAGES			
79 - RECORD OF TEMPORARY REVISIONS			
79 - TABLE OF CONTENTS			
79-30-00	Figure 01	2	Aug 1/2007
79-30-00	Figure 02	2	Aug 1/2015
79-30-00	Figure 02A	2	Aug 1/2015

© Cessna Aircraft Company

SUBJECT	CHAPTER SECTION SUBJECT	FIGURE	EFFECTIVITY START	EFFECTIVITY END
OIL INDICATING SYSTEM	79-30-00	01	0001	0538
OIL INDICATING SYSTEM	79-30-00	02	0539	0750
OIL INDICATING SYSTEM	79-30-00	02A	0751	& ON

© Cessna Aircraft Company

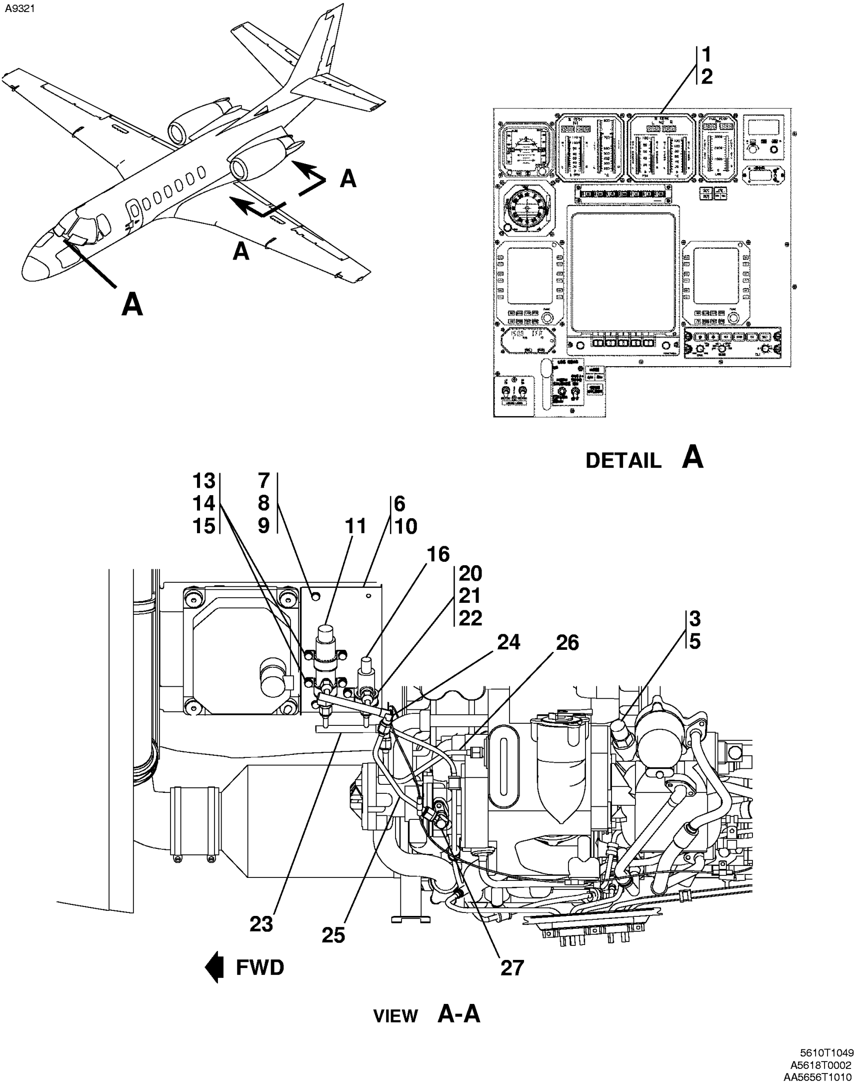

OIL INDICATING SYSTEM
FIGURE 02 (SHEET 1)

FIG ITEM	PART NUMBER	NOMENCLATURE 1 2 3 4 5 6 7				UNITS PER ASSY
02						
-		OIL INDICATING SYSTEM		0539	0750	RF
1	9912560-4	. INDICATOR-OIL TEMPERATURE/OIL PRESSURE				01
		ATTACHING PARTS				
2	64359B	. CLAMP	V91893			01
		—*—				
3	102-00083	. TEMPERATURE SENSOR-LH OIL XMTR7 FSO MS28034-3.	V64375			NP R
- 3A	MS28034-3	. TEMPERATURE SENSOR-LH OIL XMTR7				01 R
- 4	102-00083	. TEMPERATURE SENSOR-RH OIL XMTR8 FSO MS28034-3	V64375			NP R
- 4A	MS28034-3	. TEMPERATURE SENSOR-RH OIL XMTR8				01 R
5	MS9388-110	. O-RING				NP
- 5A	M83248/1-110	. O-RING				02
6	6556011-2	. PANEL ASSY				01
		ATTACHING PARTS				
7	AN3C3A	. BOLT				02
8	NAS1149C0316R	. WASHER				02
9	MS21043-3	. NUT				02
		—*—				
10	MS21060-3	. . NUTPLATE				05
11	9912464-1	. OIL PRESSURE TRANSMITTER-LH ENGINE UD005				02
- 12	9912464-1	. OIL PRESSURE TRANSMITTER-RH ENGINE UE005				02
		ATTACHING PARTS				
13	NAS1716C16K	. CLAMP				02
14	AN3C3A	. BOLT				04
15	NAS1149C0316R	. WASHER				02
		—*—				
16	9912466-1	. SWITCH-LOW OIL PRESSURE LH ENGINE S171 FSO 9912466-2		0539	0539	NP
- 17	9912466-2	. SWITCH-LOW OIL PRESSURE LH ENGINE S171		0540	0750	01
- 18	9912466-1	. SWITCH-LOW OIL PRESSURE RH ENGINE S172 FSO 9912466-2		0539	0539	NP
- 19	9912466-2	. SWITCH-LOW OIL PRESSURE RH ENGINE S172		0540	0750	01
		ATTACHING PARTS				
20	MS21919WCG16	. CLAMP		0539	0539	01
- 20A	MS21919WDG17	. CLAMP		0540	0750	01
21	NAS1149C0316R	. WASHER				01
22	AN3C3A	. BOLT		0539	0539	01
- 22A	AN3C4A	. BOLT		0540	0750	01
		—*—				
23	6556011-4	. MANIFOLD ASSY-OIL PRESSURE FSO 6556011-10		0539	0648	NP
- 23A	6556011-10	. MANIFOLD ASSY		0649	0750	01
24	6556011-5	. MANIFOLD ASSY-OIL PRESSURE FSO 6556011-11		0539	0648	NP
- 24A	6556011-11	. MANIFOLD ASSY		0649	0750	01
25	6556011-8	. TUBE ASSY-OIL PRESSURE TRANSMITTER				02
26	6556011-7	. TUBE ASSY-OIL PRESSURE TRANSMITTER				02
27	MS51521B4	. ELBOW				02

- ITEM NOT ILLUSTRATED

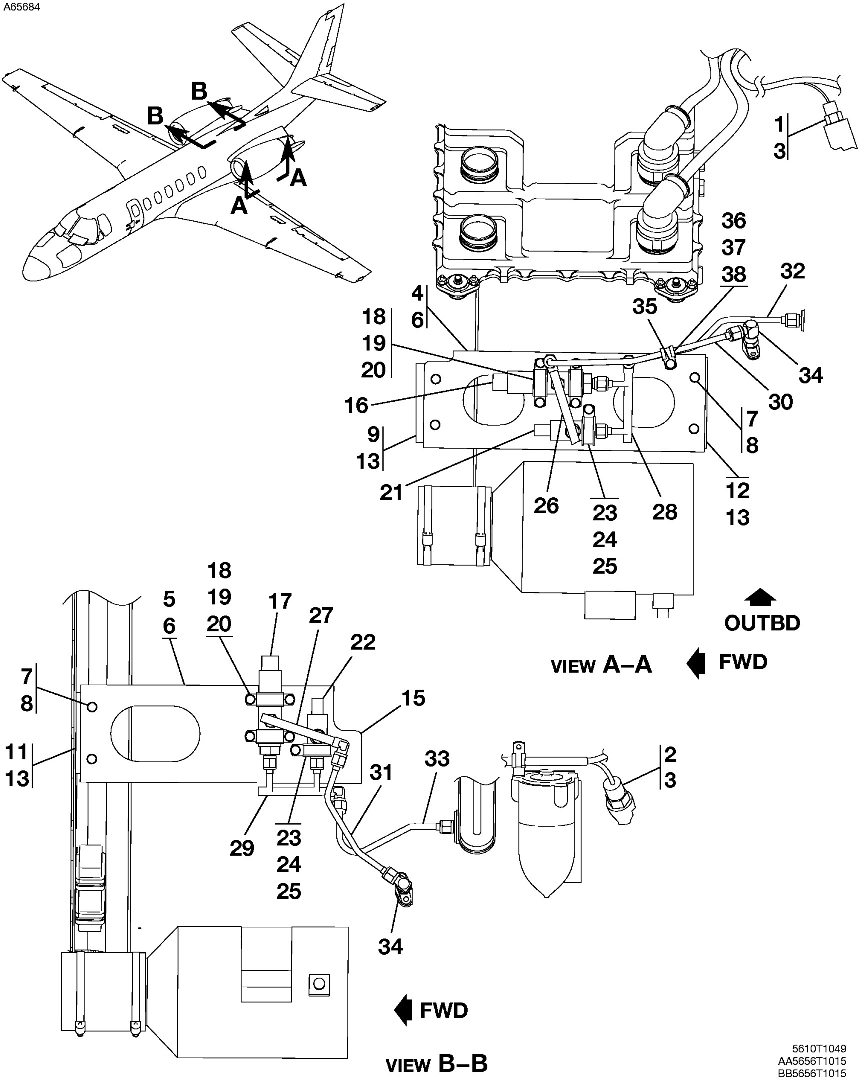

OIL INDICATING SYSTEM
FIGURE 02A (SHEET 1)

FIG ITEM	PART NUMBER	NOMENCLATURE 1 2 3 4 5 6 7			UNITS PER ASSY
02A					
-		OIL INDICATING SYSTEM	0751	& ON	RF
1	102-00083	. TEMPERATURE SENSOR-LH OIL TRANSMITTER XMTR7 FSO MS28034-3 . . V64375			NP R
- 1A	MS28034-3	. TEMPERATURE SENSOR-LH OIL TRANSMITTER XMTR7			01 R
2	102-00083	. TEMPERATURE SENSOR-RH OIL TRANSMITTER XMTR8 FSO MS28034-3 . . V64375			NP R
- 2A	MS28034-3	. TEMPERATURE SENSOR-RH OIL TRANSMITTER XMTR8			01 R
3	M83248/1-110	. O-RING			02
4	6556111-1	. BRACKET ASSY LH			01
5	6556111-12	. BRACKET ASSY RH			01
6	MS21059-3	. . NUTPLATE			05
		ATTACHING PARTS			
7	AN3-3A	. BOLT			04
8	NAS1149D0316K	. WASHER			04
		—*—			
9	6556111-19	. BRACKET ASSY-LH			01
- 10	6556111-24	. BRACKET ASSY-RH	0751	0754	01
11	6556111-18	. BRACKET ASSY-RH	0755	& ON	01
12	6556111-13	. BRACKET ASSY-LH			01
13	MS21059-3	. . NUTPLATE			02
- 14	NAS1149D1042R	. WASHER-RH	0751	0754	01
15	6556111-16	. BRACKET-RH			01
16	9912464-1	. OIL PRESSURE TRANSMITTER-LH ENGINE UD005			01
17	9912464-1	. OIL PRESSURE TRANSMITTER-RH ENGINE UE005			01
		ATTACHING PARTS			
18	NAS1716C16K	. CLAMP			02
19	NAS1149D0316K	. WASHER			02
20	AN3-3A	. BOLT			04
		—*—			
21	9912466-2	. SWITCH-LOW OIL PRESSURE LH ENGINE SD004			01
22	9912466-2	. SWITCH-LOW OIL PRESSURE RH ENGINE SE004			01
		ATTACHING PARTS			
23	MS21919WDG17	. CLAMP			01
24	NAS1149D0316K	. WASHER			01
25	AN3-3A	. BOLT			01
		—*—			
26	6556111-25	. MANIFOLD ASSY-LH			01
27	6556011-11	. MANIFOLD ASSY-RH			01
28	6556111-26	. MANIFOLD ASSY-LH			01
29	6556011-10	. MANIFOLD ASSY-RH			01
30	6556111-7	. TUBE ASSY-OIL PRESSURE TRANSMITTER LH			01
31	6556011-8	. TUBE ASSY-OIL PRESSURE TRANSMITTER RH			01
32	6556111-5	. TUBE ASSY-OIL PRESSURE TRANSMITTER LH			01
33	6556011-7	. TUBE ASSY-OIL PRESSURE TRANSMITTER RH			01
34	MS51521B4	. ELBOW-LH AND RH			02
35	MS21919WCG4	. CLAMP-LH			02
36	NAS1149D0316K	. WASHER-LH			01
37	AN3-3A	. BOLT-LH			01
38	MS21042-3	. NUT-LH			01

- ITEM NOT ILLUSTRATED

CHAPTER

80

STARTING

CHAPTER SECTION SUBJECT		NUMBER OF PAGES	DATE
80 - TITLE			
80 - LIST OF EFFECTIVE PAGES			
80 - RECORD OF TEMPORARY REVISIONS			
80 - TABLE OF CONTENTS			
80-10-00	Figure 01	2	Apr 5/2005
80-10-00	Figure 02	2	Aug 1/2015
80-10-00	Figure 02A	2	May 1/2002
80-10-00	Figure 03	2	Mar 1/2010
80-10-00	Figure 04	2	Mar 1/2010

© Cessna Aircraft Company

SUBJECT	CHAPTER SECTION SUBJECT	FIGURE	EFFECTIVITY START	EFFECTIVITY END
STARTING SYSTEM	80-10-00	01	0001	0349
STARTER GENERATOR COOLING SYSTEM	80-10-00	02	0001	0538
STARTER GENERATOR COOLING SYSTEM	80-10-00	02A	0539	& ON
CAPACITOR INSTALLATION - STARTER GENERATOR	80-10-00	03	0072	0538
CAPACITOR INSTALLATION - STARTER GENERATOR	80-10-00	04	0539	& ON

© Cessna Aircraft Company

A15239

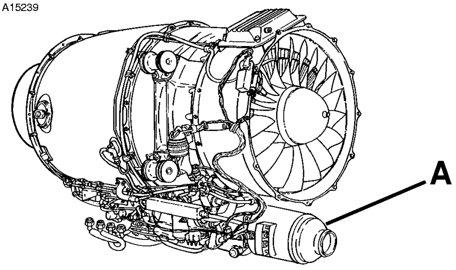

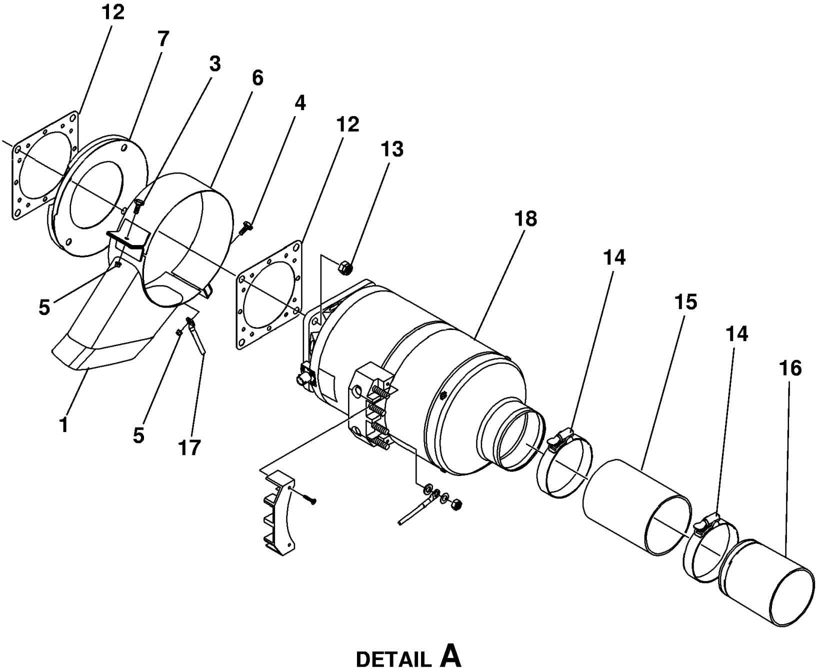

DETAIL A

56552002
A6558T2002

STARTER GENERATOR COOLING SYSTEM
FIGURE 02 (SHEET 1)

FIG ITEM	PART NUMBER	NOMENCLATURE 1 2 3 4 5 6 7			UNITS PER ASSY
02					
-		STARTER GENERATOR COOLING SYSTEM	0001	0538	RF
1	6555059-47	. DUCT ASSY-LH-FSO 6555059-104	0001	0337	01
- 2	6555059-104	. DUCT ASSY-LH	0338	0538	01
- 2A	6555059-64	. BAND ASSY-LOWER RH	0001	0304	01
- 2B	6555059-92	. BAND ASSY-LOWER RH-FSO 6555059-101	0305	0337	01
- 2C	6555059-101	. BAND ASSY-LOWER RH	0338	0538	01
		ATTACHING PARTS			
3	AN3-3A	. BOLT			01
4	AN3-6A	. BOLT			01
5	MS21044N3	. NUT			02
		—*—			
6	6555059-46	. BAND ASSY-UPPER LH ENGINE-FSO 6555059-109	0001	0337	01
- 6A	6555059-63	. BAND ASSY-UPPER RH ENGINE	0001	0304	01
- 6B	6555059-91	. BAND ASSY-UPPER RH-FSO 6555059-100	0305	0337	01
- 6C	6555059-100	. BAND ASSY-UPPER RH	0338	0538	01
- 6D	6555059-109	. BAND ASSY-UPPER LH	0338	0538	01
7	6555059-41	. SUPPORT ASSY-LH ENGINE-FSO 6555059-107	0001	0337	01
- 8	6555059-42	. SUPPORT ASSY-RH ENGINE-FSO 6555059-108	0001	0337	01
- 8A	6555059-107	. SUPPORT ASSY-LH	0338	0538	01
- 8B	6555059-107	. SUPPORT ASSY-RH	0338	0538	01
- 9	6555059-58	. . SUPPORT-LH AND RH ENGINE FSO 6555059-106	0001	0337	01
- 9A	6555059-106	. . SUPPORT-LH AND RH ENGINE	0338	0538	01
- 10	6555059-56	. . SUPPORT-RH ENGINE	0001	0337	01
- 11	6555059-57	. . SUPPORT-LH ENGINE	0001	0337	01
12	MS9135-01	. GASKET-FSO S3365-1			NP R
- 12A	S3365-1	. GASKET			02 R
13	MS21045-5	. NUT			04
14	AN737TW114	. CLAMP			02
15	CM3213-12	. DUCT-GENERATOR COOLING 4.00 IN LG BKI			01
16		. SCOOP-GENERATOR COOLING REFER TO 54-10-00 FIGURE 01			RF
17	MS25083-2BC14	. JUMPER-BONDING			01
18		. STARTER GENERATOR REFER TO 24-30-01 FIG 01			RF

- ITEM NOT ILLUSTRATED